LG
Life's Good

MFL71949253230 1REV00

NANO77*

www.lg.com

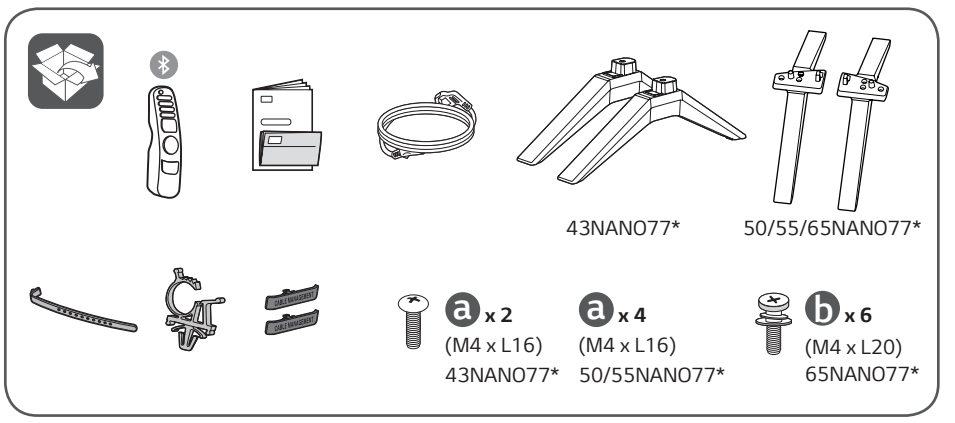

43/50/55NANO77*

1

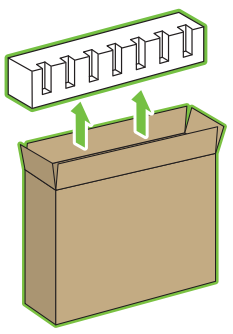

2

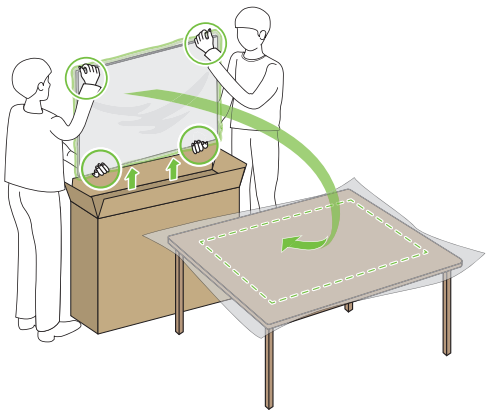

3

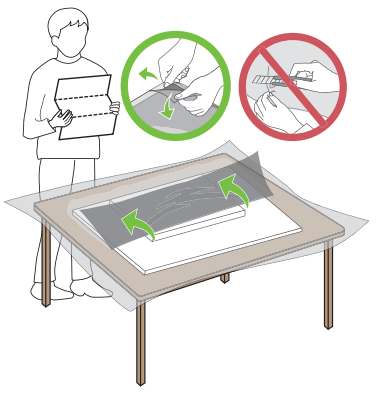

65NANO77*

1

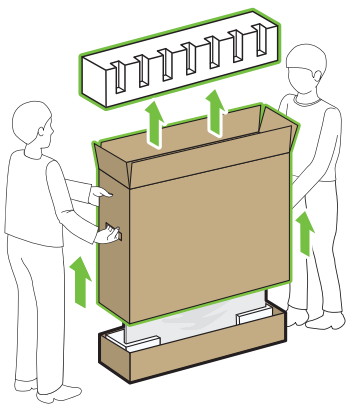

2

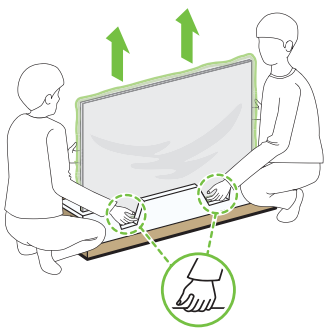

3

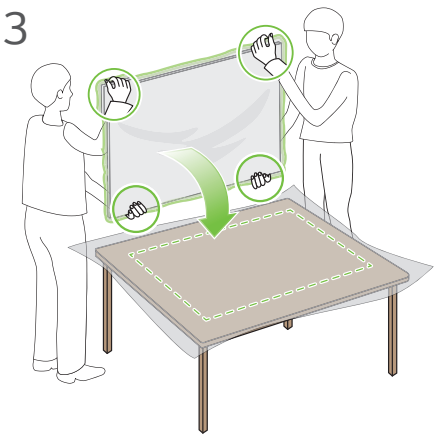

4

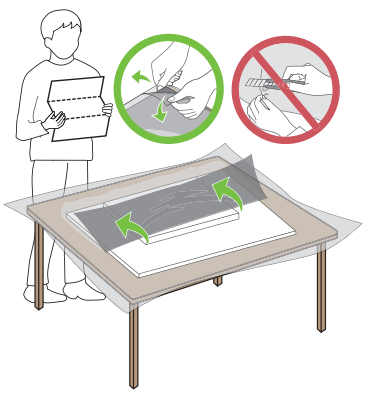

1

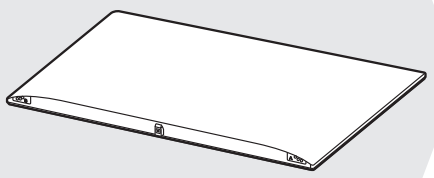

2-A 43NANO77*

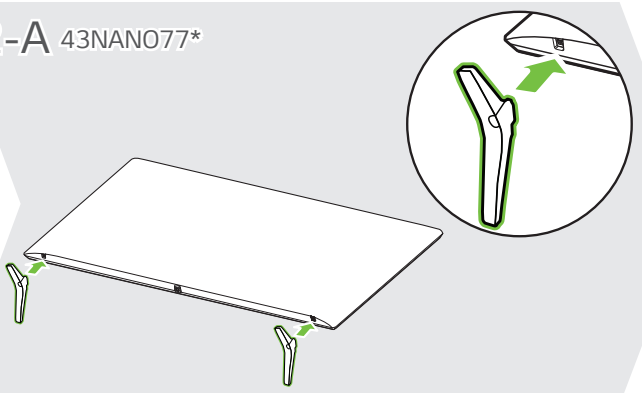

2-B 50/55/65NANO77*

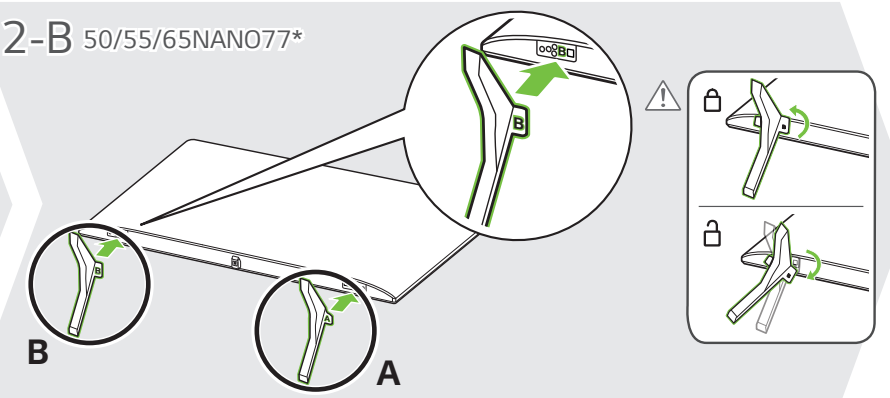

3-A 43NANO77*

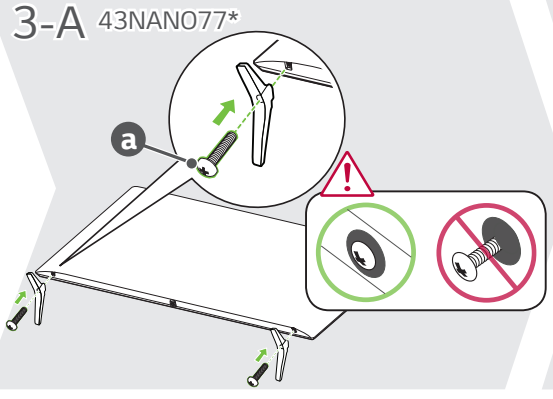

3-B 50/55NANO77*

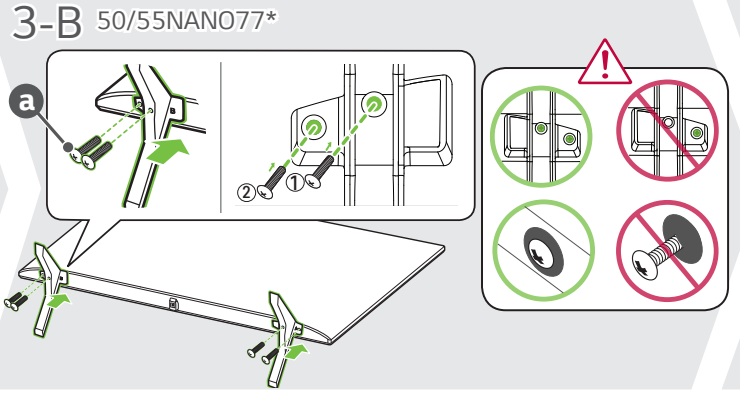

3-C 65NANO77*

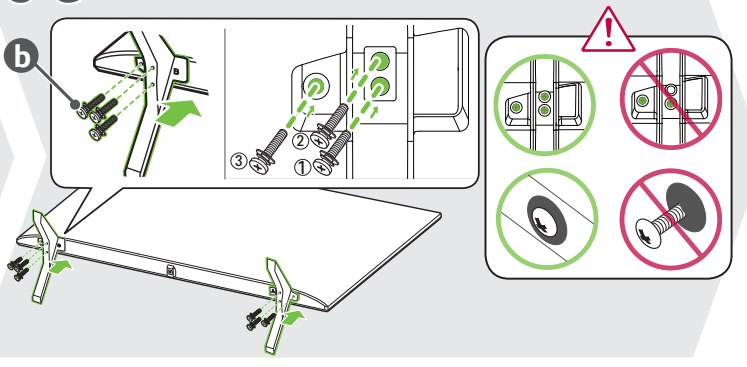

4

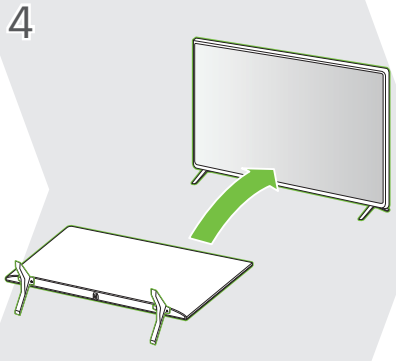

5

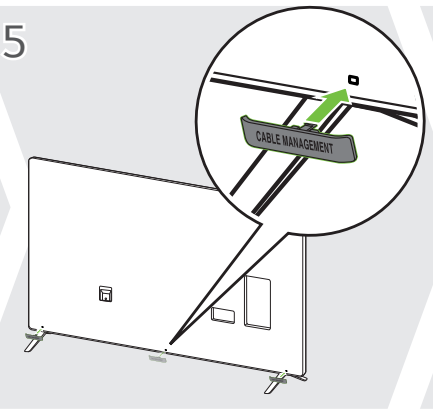

6

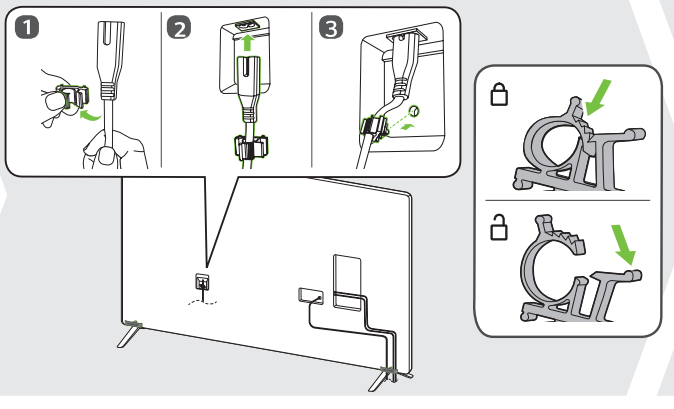

7

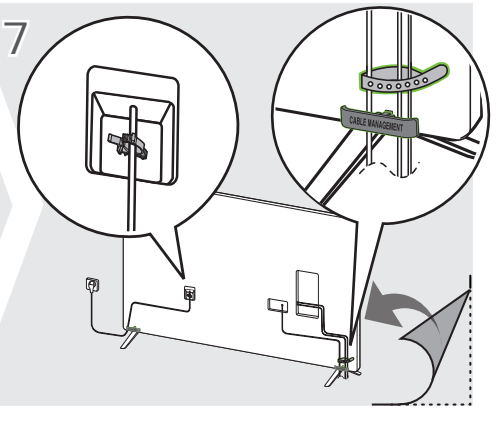

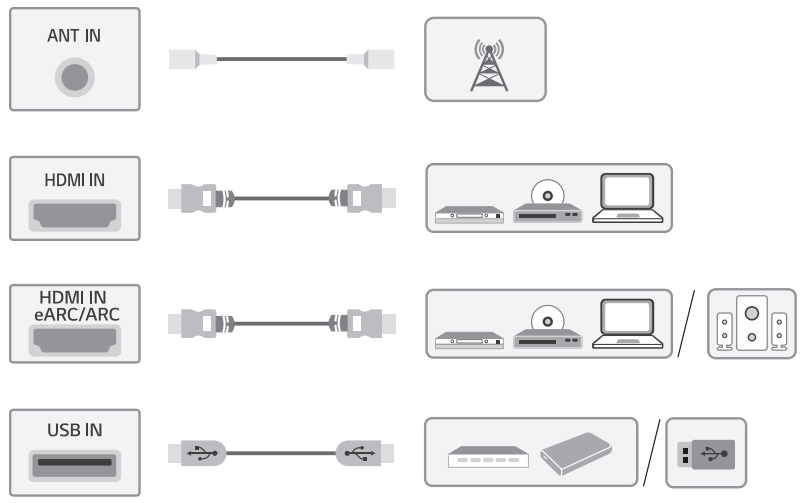

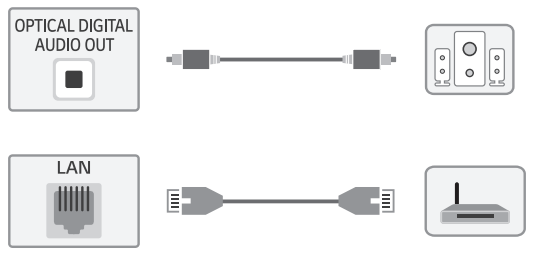

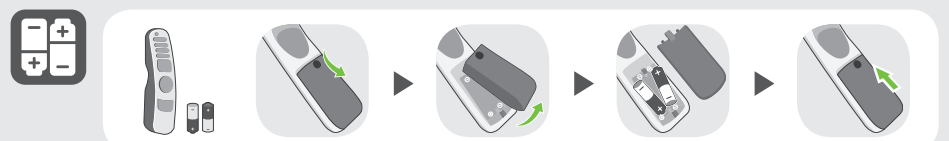

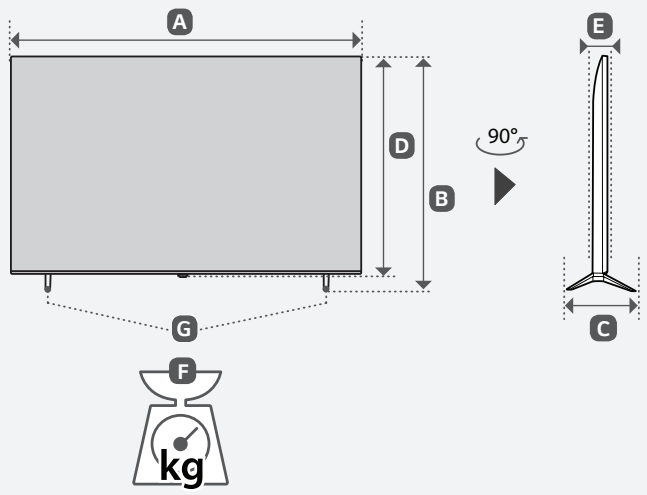

	A	B	C	D	E	F	F - G
	(mm)					(kg)	
43NANO776RA 43NANO77SRA	967	621	200	564	57.1	8.9	8.8
50NANO776RA 50NANO77SRA	1121	716	230	651	57.1	11.8	11.7
55NANO776RA 55NANO77SRA	1235	780	230	715	57.5	14.1	14.0
65NANO776RA 65NANO77SRA	1454	903	269	838	57.7	21.7	21.5

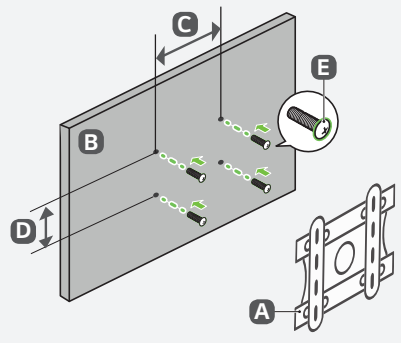

A	B	C x D (mm)	E
LSW240B MSW240	43NANO77* 50NANO77*	200 x 200	M6
OLW480B MSW240	55NANO77*	300 x 300	M6
OLW480B	65NANO77*	300 x 300	M6

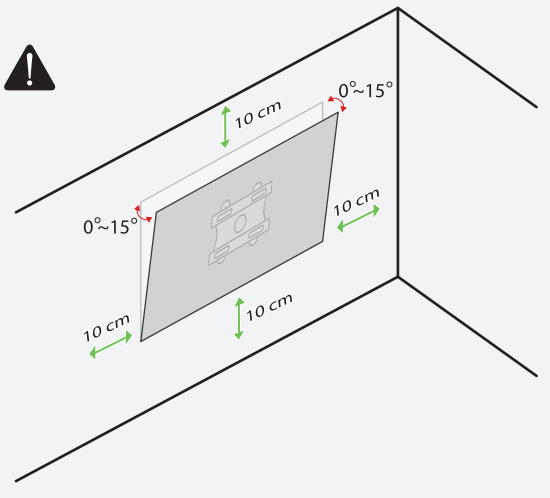

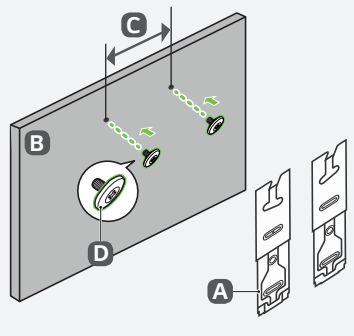

A	B	C (mm)	D
WB21LMB	43NANO77* 50NANO77*	200	M6
WB21LMB	55NANO77* 65NANO77*	300	M6