www.lg.com

MFL71766403
(2105-REV01)

UP767*
UP77*

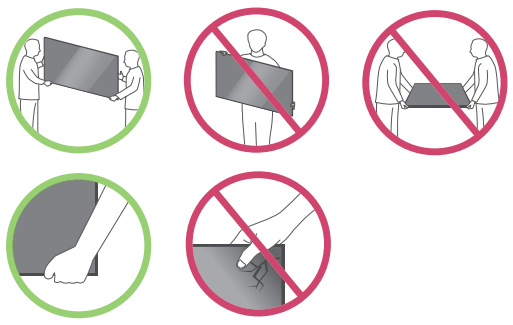

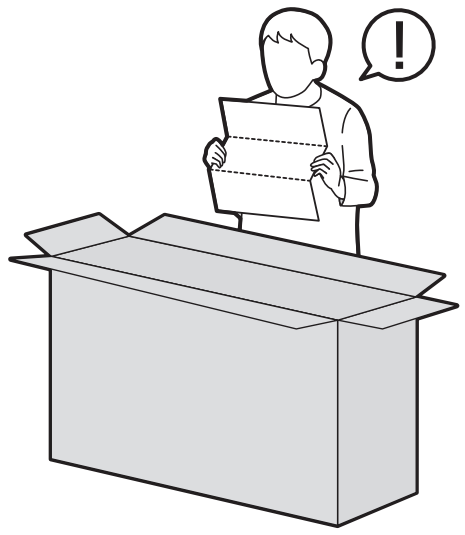

50/55UP767*
50/55UP77*

1

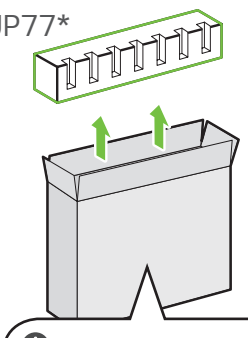

2

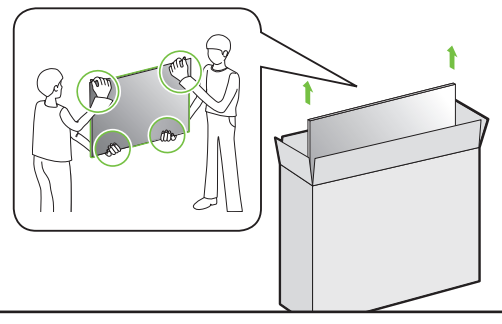

3

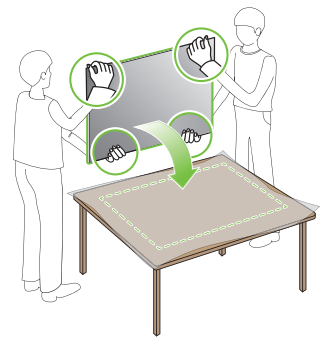

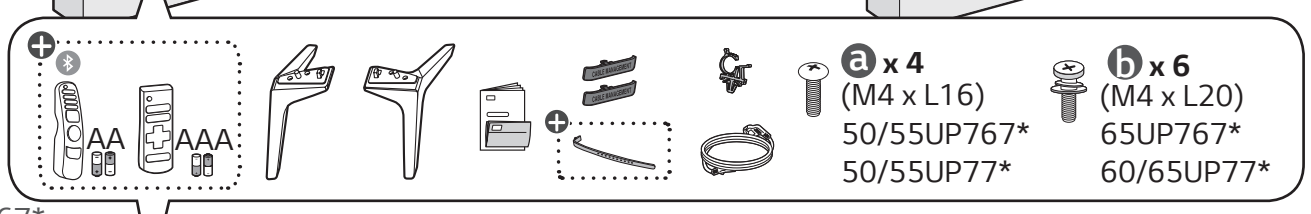

65UP767*
60/65UP77*

1

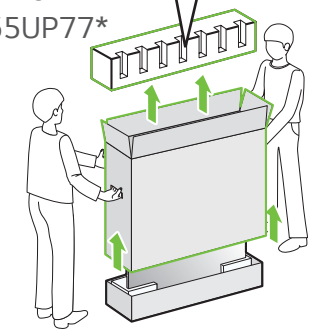

2

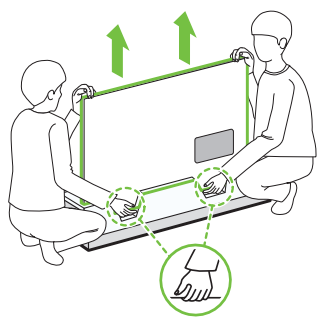

3

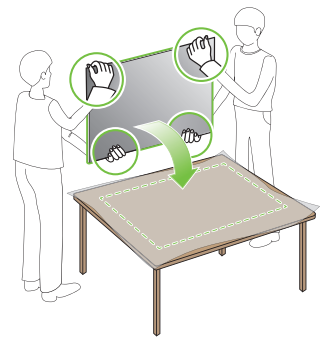

1

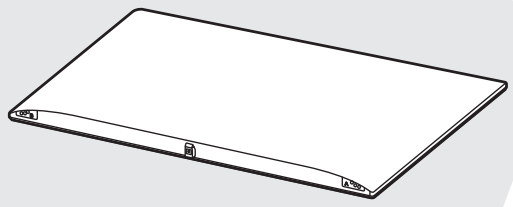

2

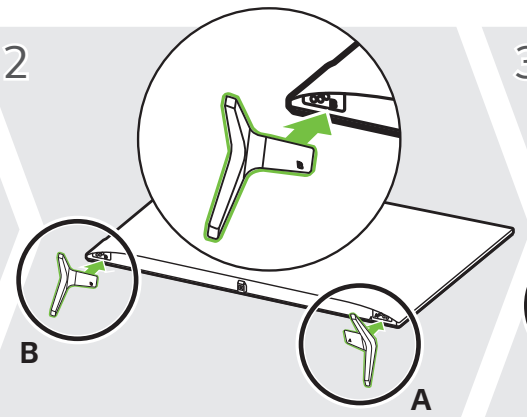

3

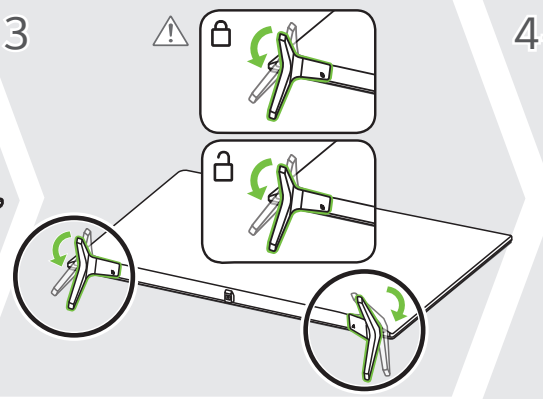

4-A 50/55UP767*
50/55UP77*

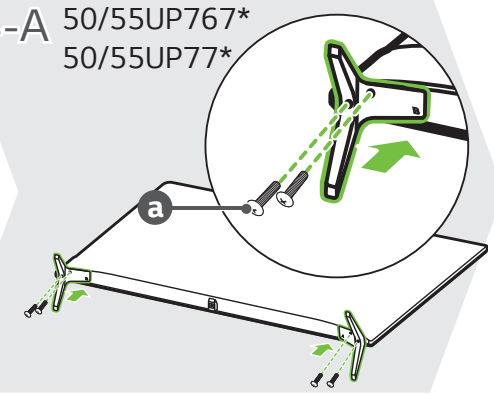

4-B 65UP767*
60/65UP77*

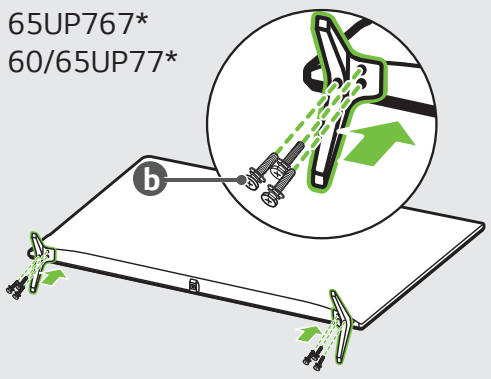

5

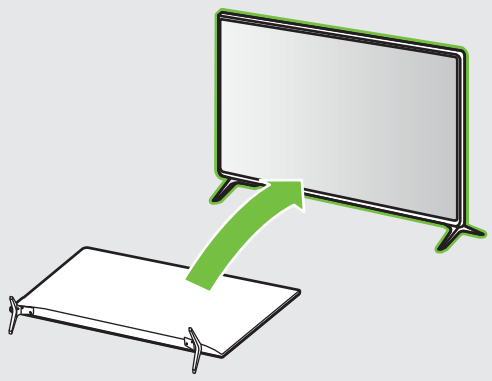

6

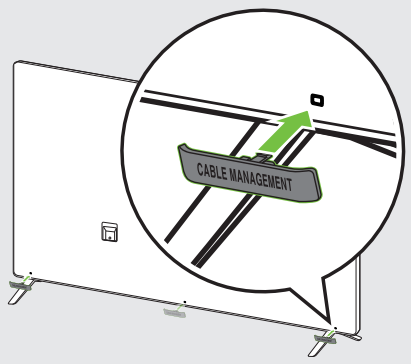

7

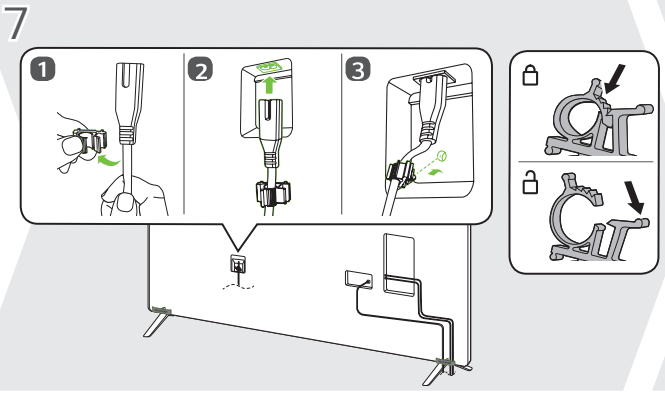

8

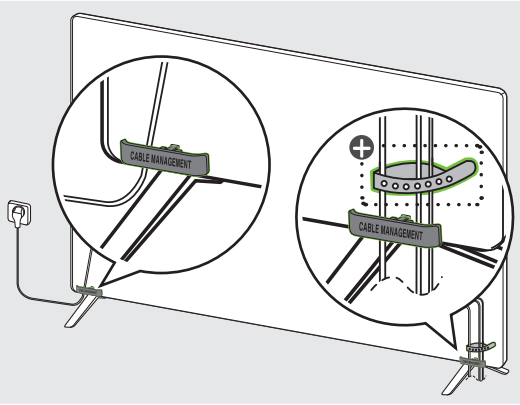

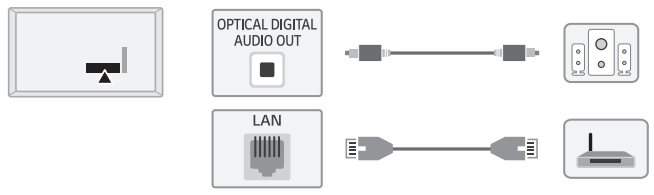

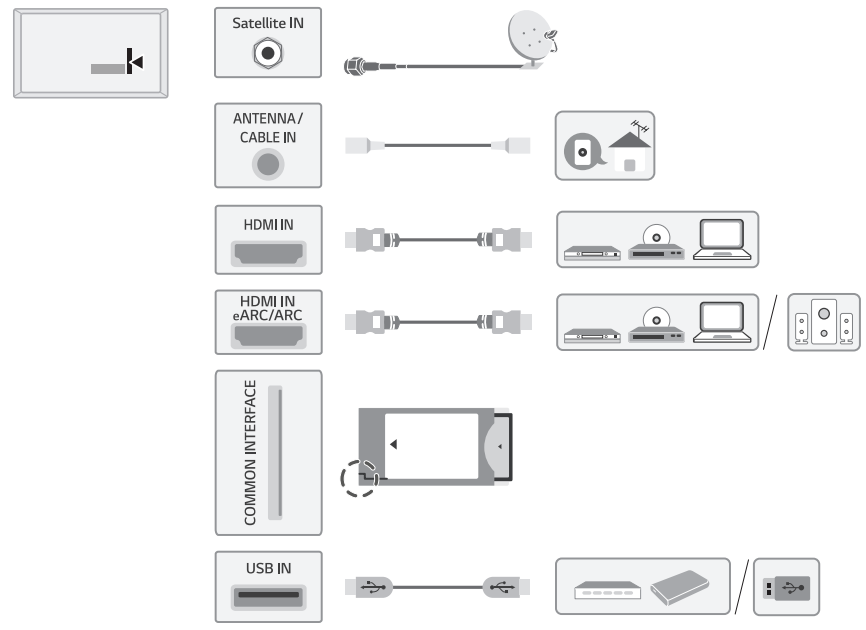

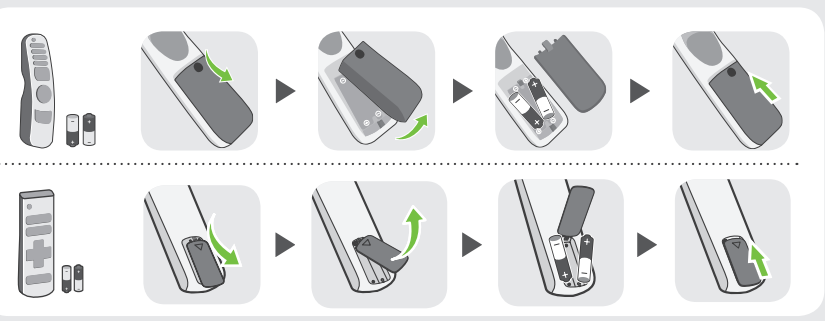

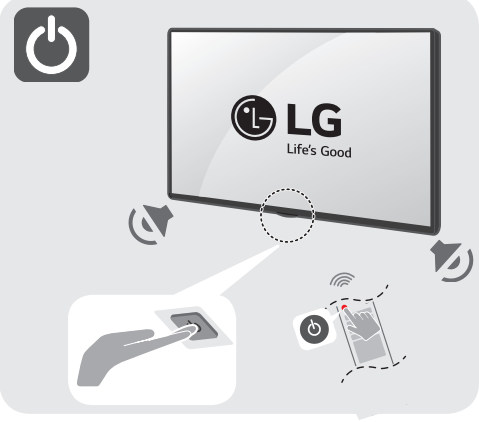

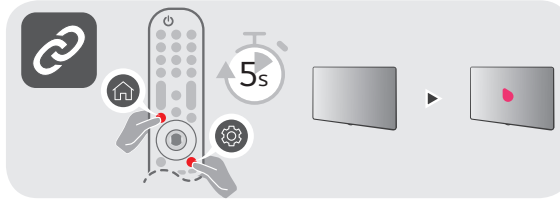

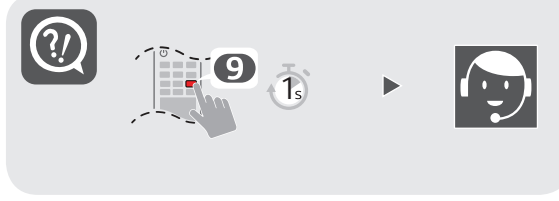

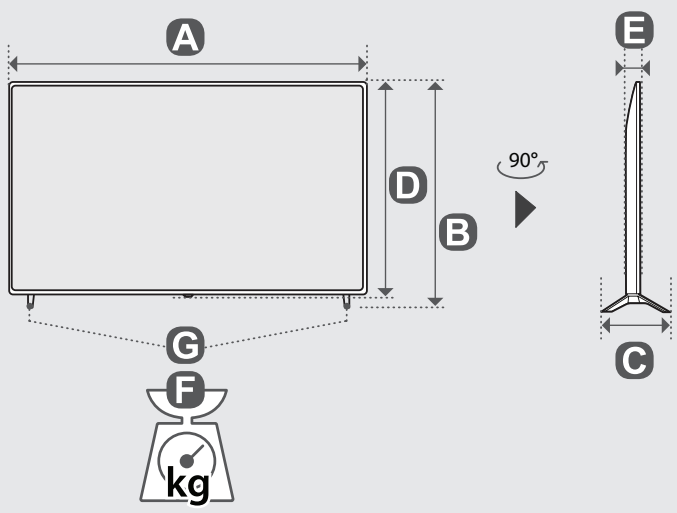

	A	B	C	D	E	F	F-G
	(mm)					(kg)	
50UP76703LB 50UP76706LB 50UP76709LB 50UP77003LB 50UP77006LB 50UP77009LB 50UP77026LB 50UP77506LA	1121	713	231	651	57.1	11.9	11.7
55UP76703LB 55UP76706LB 55UP76709LB 55UP77003LB 55UP77006LB 55UP77009LB 55UP77026LB 55UP77506LA	1235	776	231	715	57.5	14.2	14.0
60UP77006LB 60UP77506LA	1356	852	269	783	57.5	17.4	17.1
65UP76703LB 65UP76706LB 65UP76709LB 65UP77003LB 65UP77006LB 65UP77009LB 65UP77026LB 65UP77506LA	1454	906	269	838	57.7	21.8	21.5
Power requirement / Güç gereksinimi / Alimentation / متطلبات الطاقة				AC 100-240 V ~ 50 / 60 Hz			

English ·Read **Safety and Reference**.

Türkçe ·**Güvenlik ve Referans** bölümünü okuyun.

Français ·Lire le document **Sécurité et référence**.

العربية • قراءة **الأمان والمرجع**.

⊕ : Depending on model / Modele bağlı olarak değişkenlik gösterebilir / Selon le modèle / حسب الطراز