OWNER'S MANUAL

HIGH POWER SPEAKER SYSTEM

Please read this manual carefully before operating your set and retain it for future reference.

MODEL

RL3

MFL70900911
1905_Rev01

www.lg.com

Copyright © 2019 LG Electronics Inc. All Rights Reserved.

Safety Information

CAUTION

RISK OF ELECTRIC SHOCK DO NOT OPEN

CAUTION: TO REDUCE THE RISK OF ELECTRIC SHOCK DO NOT REMOVE COVER (OR BACK) NO USER-SERVICEABLE PARTS INSIDE REFER SERVICING TO QUALIFIED SERVICE PERSONNEL.

This lightning flash with arrowhead symbol within an equilateral triangle is intended to alert the user to the presence of uninsulated dangerous voltage within the product's enclosure that may be of sufficient magnitude to constitute a risk of electric shock to persons.

The exclamation point within an equilateral triangle is intended to alert the user to the presence of important operating and maintenance (servicing) instructions in the literature accompanying the product.

WARNING: TO PREVENT FIRE OR ELECTRIC SHOCK HAZARD, DO NOT EXPOSE THIS PRODUCT TO RAIN OR MOISTURE.

CAUTION: The apparatus should not be exposed to water (dripping or splashing) and no objects filled with liquids, such as vases, should be placed on the apparatus.

WARNING: Do not install this equipment in a confined space such as a book case or similar unit.

CAUTION: Do not use high voltage products around this product. (ex. Electrical swatter) This product may malfunction due to electrical shock.

CAUTION: Do not block any ventilation openings. Install in accordance with the manufacturer's instructions.
Slots and openings in the cabinet are provided for ventilation and to ensure reliable operation of the product and to protect it from over heating. The openings should never be blocked by placing the product on a bed, sofa, rug or other similar surface. This product should not be placed in a built-in installation such as a bookcase or rack unless proper ventilation is provided or the manufacturer's instruction has been adhered to.

NOTICE: For safety marking information including product identification and supply ratings, please refer to the main label on the bottom or the other surface of the product.

CAUTION concerning the Power Cord

The Power Plug is the disconnecting device. In case of an emergency, the Power Plug must remain readily accessible.

Check the specification page of this owner's manual to be certain of the current requirements.

Do not overload wall outlets. Overloaded wall outlets, loose or damaged wall outlets, extension cords, frayed power cords, or damaged or cracked wire insulation are dangerous. Any of these conditions could result in electric shock or fire. Periodically examine the cord of your device, and if its appearance indicates damage or deterioration, unplug it, discontinue use of the device, and have the cord replaced with an exact replacement part by an authorized service center. Protect the power cord from physical or mechanical abuse, such as being twisted, kinked, pinched, closed in a door, or walked upon. Pay particular attention to plugs, wall outlets, and the point where the cord exits the device.

This device is equipped with a portable battery or accumulator.

How to Safely remove the batteries or the battery pack from the equipment:
To Remove the old batteries or battery pack, follow the assembly steps in reverse order. To prevent contamination of the environment and bring on possible threat to human and/or animal health, the old batteries or the battery pack must be put in an appropriate container at designated collection points. Do not dispose of batteries or battery pack together with other waste. It is recommended that you use local, free reimbursement systems batteries or battery packs, (may not be available in your area). The batteries or the battery pack should not be exposed to excessive heat such as sunshine, fire or the like.

CAUTION: No naked flame sources, such as lighted candles, should be placed on the apparatus.

Symbols

~	Refers to alternating current (AC).
⎓	Refers to direct current (DC).
⧈	Refers to class II equipment.
⏻	Refers to stand-by.
I	Refers to "ON" (power).
ϟ	Refers to dangerous voltage.

Table of Contents

1 Getting Started

2 Safety Information
6 Unique Features
7 Playable file Requirement
7 – Music file requirement
7 – Compatible USB Devices
7 – USB device requirement
8 Remote control
10 Top / Front panel
11 Side / Rear panel

2 Connecting

13 Optional Equipment Connection
13 – AUX IN 1 Connection
13 – AUX IN 2 Connection
14 – USB Connection

3 Operating

15 Basic Operations
15 – USB Operations
16 – Selecting a folder and an MP3/WMA/OGG/FLAC/WAV/M4A (ALAC) file
17 Using BLUETOOTH® wireless technology
17 – Listening to music stored on the Bluetooth devices
20 Radio Operations
20 – Listening to the radio
20 – Improving poor FM reception
20 – Presetting the Radio Stations
20 – Deleting all the saved stations
21 – Seeing information about a Radio station
22 Sound adjustment
22 – Setting the sound mode
22 Other Operations
22 – Turn off the sound temporarily
22 – Sleep Timer Setting
22 – Dimmer
23 – Auto power down
23 – AUTO POWER On
24 – Auto function change
25 Setting the Clock
25 – Using your player as an alarm clock
26 LG Sound Sync
27 WIRELESS PARTY LINK Connection

4 Troubleshooting

29 Troubleshooting
29 – General

5 Appendix

30 General specifications
31 Trademarks and Licenses
31 Maintenance
31 – Handling the Unit

Unique Features

BLUETOOTH®

Listens to music stored on your **Bluetooth** device.

LG Sound Sync

Controls volume level of this unit by the remote control of your LG TV that is compatible with LG Sound Sync.

WIRELESS PARTY LINK connection

You can enjoy the sound with two(DUAL mode) speakers. For enjoying WIRELESS PARTY LINK, you need to purchase another speaker.

Playable file Requirement

Music file requirement

MP3/WMA/OGG/FLAC/WAV/M4A (ALAC) file compatibility with this unit is limited as follows.

- Sampling frequency :

  MP3: within 32 to 48 kHz

  WMA: within 32 to 48 kHz

  OGG: within 32 to 48 kHz

  FLAC : 32 kHz, 44.1 kHz, 48 kHz, 88.2 kHz, 96 kHz, 176.4 kHz and 192 kHz (16 bit/ 24 bit)

  WAV : 32 kHz, 44.1 kHz, 48 kHz, 88.2 kHz, 96 kHz (16 bit/ 24 bit)

  M4A (ALAC) : 32 kHz, 44.1 kHz, 48 kHz, 88.2 kHz, 96 kHz (16 bit/ 24 bit)

- Bit rate :

  MP3: within 32 to 320 kbps

  WMA: within 40 to 192 kbps

  OGG: within 64 to 500 kbps

- Support channel: Up to 2 channel
- Maximum files : 999
- Maximum folders : 99
- File extensions : ".mp3"/ ".wma" / ".ogg" / ".flac" / ".wav"/ ".m4a" (ALAC)
- Certain MP3/WMA/OGG/FLAC/WAV/ M4A (ALAC) files may not be played depending on the type or format of the file.

Compatible USB Devices

- MP3 Player : Flash type MP3 player.
- USB Flash Drive :
  Devices that support USB2.0 or USB1.1.
- The USB function of this unit does not support all USB devices.

USB device requirement

- Devices which require additional program installation when you have connected it to a computer, are not supported.
- Do not extract the USB device while in operation.
- For a large capacity USB, it may take longer than a few minute to be searched.
- To prevent data loss, back up all data.
- If you use a USB extension cable or USB hub, the USB device is not recognized.
- Using NTFS file system is not supported. (Only FAT(16/ 32) file system is supported.)
- This unit recognizes up to 999 files.
- External HDD, Card readers, Locked devices, or hard type USB devices are not supported.
- USB port of the unit cannot be connected to PC. The unit cannot be used as a storage device.
- Some USB may not work with this unit.

Remote control

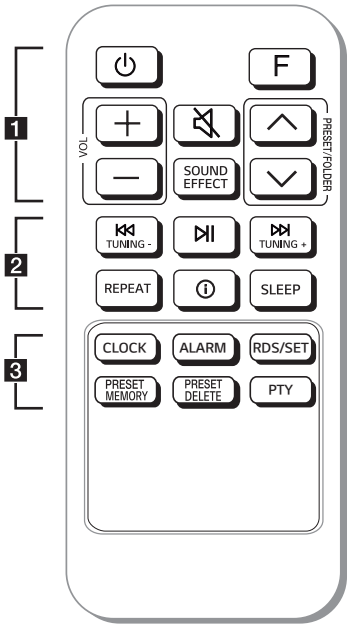

Replacement of battery

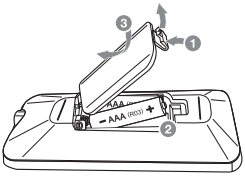

Remove the battery cover on the rear of the remote control, and insert the battery with ⊕ and ⊖ matched correctly.

1

⏻ (Standby) **:** Turns the power on or off.

F (Function) **:** Selects the function and input source.

Input source / Function	Display
USB	USB
AUX (3.5 mm) input	AUX 1
AUX input	AUX 2
Bluetooth	BT
LG Sound Sync (Wireless)	LG TV
Radio	FM

VOL (Volume) **+/- :** Adjusts speaker volume.

🔇 (Mute) **:** Mutes the sound.

SOUND EFFECT : Chooses sound impressions.

PRESET/FOLDER ∧/∨ :

- Chooses a preset number for a radio station. (Page 20)
- Searches for a folder of MP3/WMA/OGG/FLAC/WAV/M4A (ALAC) files. When a USB containing MP3/WMA/OGG/FLAC/WAV/M4A (ALAC) files in several folders is being played, press **PRESET/FOLDER ∧/∨** to select the folder you want to play.

2

TUNING-/+ : Selects the radio stations.

⏮ / ⏭ (Skip/Search)
- Skips backward or forward.
- Searches for a section within a file.

⏯ (Play/Pause)
- Starts or pauses playback.
- Selects stereo/mono (DUAL mode only).

REPEAT : Listens to your files repeatedly or randomly.

ⓘ (Information) **:**
- Sees information about your music. An MP3 file often come with ID3 tag. The tag gives the Title, Artist, Album or Time information.
- Sees **Bluetooth** device name of the unit in BT READY.
- Sees the name of connected all **Bluetooth** device in **Bluetooth** mode.
- When these units are successfully connected each other in DUAL mode of WIRELESS PARTY LINK, each of connected device names appears in the each unit.

SLEEP : Sets the system to turn off automatically at a specified time.
(Dimmer : The display window will be darkened by half.)

3

CLOCK : Sets a clock and checks a time.

ALARM : With the ALARM function you can turn on USB play and tuner reception at a desired time.

RDS/SET :
- RDS (Radio Data System)
- Confirms the setting.

PRESET MEMORY : Stores radio stations.
(Page 20)

PRESET DELETE : Deletes all the saved stations.
(Page 20)

PTY : Searches radio stations by radio type.

Top / Front panel

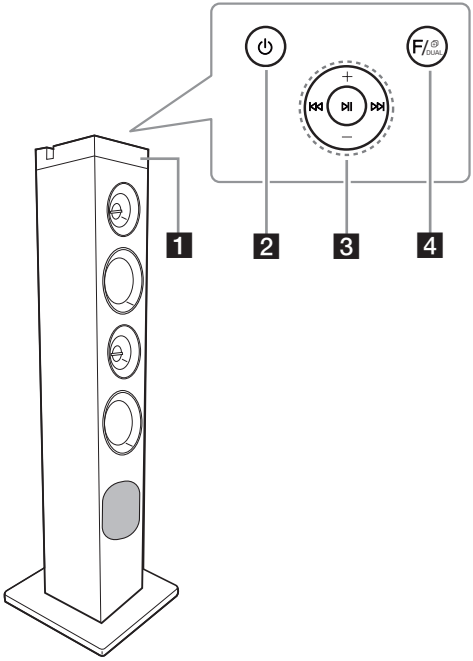

1 Display window

2 ⏻ (Standby)
Turns the power on or off.

3 ⏮ / ⏭ (Skip/Search)
- Skips backward or forward.
- Searches for a section within a file.
- Selects the radio stations.

⏯ (Play/Pause)
- Starts or pauses playback.
- Selects stereo/mono (DUAL mode only).

+/-
Adjusts speaker volume.

4 **F** (Function) **/ DUAL**
- Selects the function and input source.
- Press and hold to connects two speakers for DUAL mode in WIRELESS PARTY LINK.

Input source / Function	Display
USB	USB
AUX (3.5 mm) input	AUX 1
AUX input	AUX 2
Bluetooth	BT
LG Sound Sync (Wireless)	LG TV
Radio	FM

Side / Rear panel

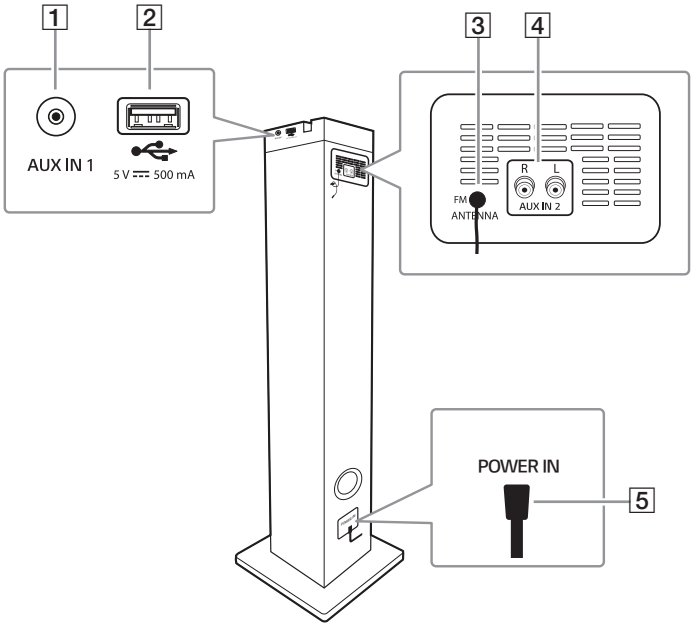

1 **AUX IN 1**
Connect a portable device.

2 USB Port
You can play sound files by connecting the USB device.

3 **FM ANTENNA**

4 **AUX IN 2 (L/R)**
Connect an auxiliary device.

5 **POWER IN**

Caution

- Be careful to make sure children do not put their hands or any objects into the *speaker duct.
  * speaker duct : A hole for plentiful bass sound on speaker cabinet (enclosure)
- The speakers contain magnet parts, so color irregularity may occur on the TV screen or PC monitor screen. Please use the speakers far away from either TV screen or PC monitor.
- Be careful that the speaker does not fall down. Otherwise it may result in the speaker malfunction and cause personal injury and/ or property damage.

Useful functions for using the unit

Function	Description	To do	Do this
BT Lock On/Off (Page 19)	It allows you to connect a Bluetooth device only on BT (**Bluetooth**) and LG TV functions. Initial setting of this function was set to off.	ON	Press and hold ⏯ for 5 seconds in BT (**Bluetooth**) function.
		OFF	Press and hold ⏯ for 5 seconds in BT (**Bluetooth**) function.
Auto Power On (Page 23)	It allows the unit to turn on automatically by input signals : BT (**Bluetooth**) or LG TV	ON	Turn off the unit by pressing ⏻ on the unit for 5 seconds.
		OFF	Turn off the unit by pressing ⏻ on the unit for 5 seconds.

Optional Equipment Connection

AUX IN 1 Connection

Connect an output (earphone or line out) of portable device (MP3 or PMP etc.) to the **AUX IN 1** (3.5 mm) connector.

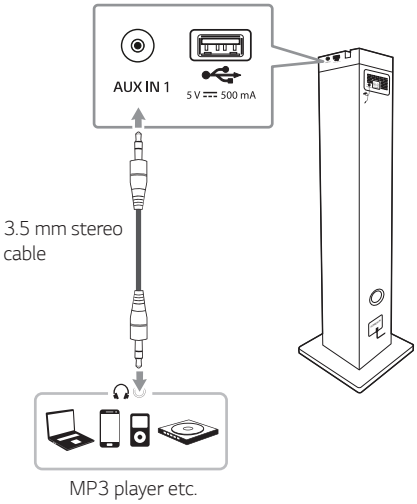

AUX IN 2 Connection

Connect an output of auxiliary device (Camcorder, TV, Player, etc) to the **AUX IN 2** (L/R) connector.

If your device has only one output for audio(mono), connect it to the left(white) audio jack on the unit.

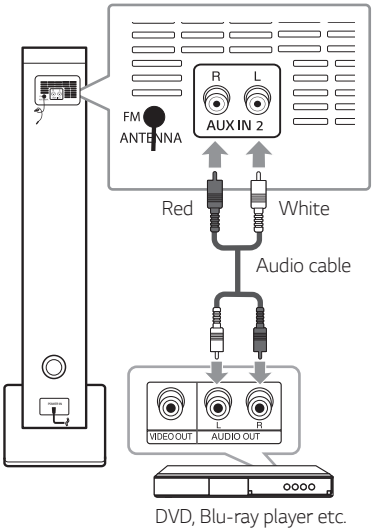

Listening to music from your portable player or external device

The unit can be used to play the music from many types of portable player or external device.

1. Connect the portable player to the **AUX IN 1** connector of the unit.

   Or

   Connect the external device to the **AUX IN 2** connector of the unit.
2. Turn the power on by pressing ⏻.
3. Press **F / DUAL** to select AUX 1 or AUX 2 function.
4. Turn on the portable player or external device and start it playing.

Note

Automatically switches to the AUX 1 function when you connect the portable device to the **AUX IN 1** connector.

USB Connection

Connect a USB device (or MP3 player, etc.) to the USB port on the unit.

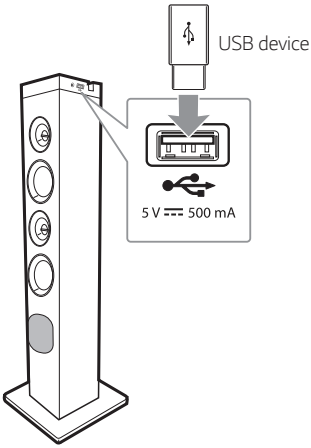

Note

Removing the USB device from the unit :

1. Choose a different function/mode.
2. Remove the USB device from the unit.

Basic Operations

USB Operations

1. Connect the USB device to the USB port.
2. Select USB function by pressing **F / DUAL**.

To	Do this
Playback	Press ▷II.
Pause	Press ▷II during playback.
Searching for a section within a file	Press and hold ⏮/⏭ during playback and release it at the point you want to listen to.
Skipping to the next/ previous file	Press ⏭ to go to the next file. Playing less than 3 seconds, press ⏮ to go to the previous file. Playing after 3 seconds, press ⏮ to go to the beginning of the file.
Playing repeatedly or randomly	Press **REPEAT** on the remote control repeatedly. Refer to the note for details about the display change.

Caution

- Do not extract the USB device during operation. (play, etc.)
- Regular back up is recommended to prevent data loss.

Note

- Repeat/Shuffle playback operates as follows.

On Display	Description
OFF	Plays songs in order, and stops the playback.
ONE	Plays a same song repeatedly
ALL	Plays all the songs repeatedly.
SHUFFLE	Plays all the songs once randomly, and stops the playback.

- Even after restarting the unit or switching one function to another, you can listen to music from the point where it's last been played.

Selecting a folder and an MP3/WMA/OGG/FLAC/WAV/M4A (ALAC) file

1. Press **PRESET/FOLDER ∧/∨** repeatedly on the remote control until a desired folder appears.
2. Select the file you want by using ⏮/⏭.
3. Press ⏯ to play it.
   The first file of folder will be played.

Note

- USB Folders/Files are recognized as below.

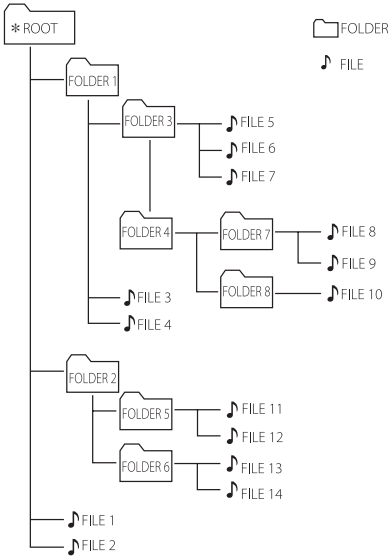

- If there is no file in a folder, the folder will not appear.
- Folders will be presented as the following order,
  ROOT → FOLDER 1 → FOLDER 3 → FOLDER 7 → FOLDER 8 → FOLDER 5 → FOLDER 6
- File will be played from ♪ file No.1 to ♪ file No.14 one by one.
- Files will be presented in order recorded and may be presented differently according to the record circumstances.

*ROOT : the first screen you can see when a computer recognize the USB is "ROOT"

Using BLUETOOTH® wireless technology

About Bluetooth

Bluetooth is wireless communication technology for short range connection.

The sound may be interrupted when the connection interfered by the other electronic wave or you connect the **Bluetooth** in the other rooms.

Connecting individual devices under **Bluetooth** wireless technology does not incur any charges. A mobile phone with **Bluetooth** wireless technology can be operated via the Cascade if the connection was made via **Bluetooth** wireless technology.

- Available Devices : Smart phone, MP3, Notebook, etc.
- Version : 4.0
- Codec : SBC, AAC

Bluetooth Profiles

In order to use **Bluetooth** wireless technology, devices must be able to interpret certain profiles. This unit is compatible with following profile.

A2DP (Advanced Audio Distribution Profile)

Listening to music stored on the Bluetooth devices

Pairing your unit and Bluetooth device

Before you start the pairing procedure, make sure the **Bluetooth** feature is activated on your **Bluetooth** device. Refer to your **Bluetooth** device's user guide. Once a pairing operation is performed, it does not need to be performed again.

1. Turn on the unit.

Note

When Bluetooth connection lock is activated, you can search **Bluetooth** device in BT function.

2. Operate the **Bluetooth** device and perform the pairing operation. When searching for this unit with the **Bluetooth** device, a list of the devices found may appear in the **Bluetooth** device display depending on the type of **Bluetooth** device. Your unit appears as "LG RL3(XX)".

Note

- XX means the last two digits of **Bluetooth** address. For example, if your unit has a **Bluetooth** address such as 9C:02:98:4A:F7:08, you will see "LG RL3(08)" on your **Bluetooth** device.
- Depending on the **Bluetooth** device type, some devices have a different pairing way. For details about **Bluetooth** pairing, refer to your **Bluetooth** device manual.
- You can connect this unit with up to 2 **Bluetooth** phones simultaneously using the same method as described above, only in the **Bluetooth** function.
- The multi phone pairing connection is only supported on Android devices. (Multi phone pairing connection may not be supported depending on the connected device specifications.)
- During multi phone pairing connection, phones are muted.
- Removable/detachable **Bluetooth** devices (Ex: Dongle etc.) will not support multi phone pairing.

3. When this unit is successfully connected with your **Bluetooth** device, "PAIRED" appears on the display window and change to **Bluetooth** device name soon. Then "BT" will appear on the display window.

Note

- "PAIRED" will momentarily appear on the display when you connect other devices for multi pairing.
- If the device name is unavailable, "_" will be displayed.

4. Listen to music.
   To play a music stored on your **Bluetooth** device, refer to your **Bluetooth** device's user guide.

Note

- When using **Bluetooth** technology, you have to make a connection between the unit and the **Bluetooth** device as close as possible and keep the distance.
  However, it may not work well in certain situations as described below :
  - There is an obstacle between the unit and the **Bluetooth** device.
  - There is a device using same frequency with **Bluetooth** technology such as a medical equipment, a microwave or a wireless LAN device.
- If **Bluetooth** connection does not work well, try pairing it again.
- Even if this unit is connected to up to 2 **Bluetooth** devices in the Bluetooth mode, you can play and control music by using only one of the connected devices.

Note

- The sound may be interrupted when the connection has interference from other electronic devices.
- Depending on the type of the device, you may not be able to use the **Bluetooth** function.
- You can enjoy wireless system using phone, MP3, Notebook, etc.
- The more distance between the unit and the **Bluetooth** device, the lower the sound quality becomes.
- **Bluetooth** connection will be disconnected when the unit is turned off or the **Bluetooth** device gets too far from the unit.
- When **Bluetooth** connection is disconnected, connect the **Bluetooth** device to the unit again.
- When a **Bluetooth** device is not connected, "READY" appears on the display window.
- When you use the BT (**Bluetooth**) function, adjust the volume to a proper level on the **Bluetooth** device.
- When you connect **Bluetooth** device (iOS device etc.) to this unit or operate the device, the volume level can be synchronized with each other.
- When entering the **Bluetooth** function, this unit automatically connects to the last connected **Bluetooth** device or the device which played back last.
  (Auto connection may not be supported depending on the connected device specifications.)

Controls connected Bluetooth device

You can control connected **Bluetooth** device by the unit; play, pause, skip.

Note

- Only Android OS and iOS is available to use this function.
- This function may not be supported depending on the **Bluetooth** device, or operated differently.

Bluetooth connection lock (BT LOCK)

You can limit **Bluetooth** connection to only BT (**Bluetooth**) function to prevent unintended **Bluetooth** connection.

To turn on this function, press and hold ▷II for about 5 seconds in BT (**Bluetooth**) function.
"ON - BT LOCK" appears then you can limit **Bluetooth** connection.

To turn off this function, press and hold ▷II for about 5 seconds in BT (**Bluetooth**) function.
"OFF - BT LOCK" appears.

Note

Even if you set up Bluetooth connection lock to On, this unit turns on by Auto Power function. Turn off Auto Power function to prevent it. (Page 23)

Radio Operations

Be sure to fully extend the FM wire antenna.

Listening to the radio

1. Press **F / DUAL** until FM appears in the display window.
   The last received station is tuned in.
2. Auto tuning :
   Press and hold **TUNING-/+** on the remote control or ⏮/⏭ on the unit until the frequency indication starts to change, then release. Scanning stops when the unit tunes in a station.

   Or

   Manual tuning :
   Press **TUNING-/+** on the remote control or ⏮/⏭ on the unit repeatedly.
3. Adjust the volume by pressing **VOL +/-** on the remote control or pressing **+/-** on the unit repeatedly.

Improving poor FM reception

Press ⏯. This will change the tuner from stereo to mono and usually improve the reception (DUAL mode only).

Presetting the Radio Stations

You can preset 50 stations for FM.
Before tuning, make sure to turn down the volume.

1. Press **F / DUAL** until FM appears in the display window.
2. Select the desired frequency by pressing **TUNING -/+** on the remote control or ⏮/⏭ on the unit.
3. Press **PRESET MEMORY** on the remote control. A preset number will blink in the display window.
4. Press **PRESET/FOLDER ∧/∨** on the remote control to select the preset number you want.
5. Press **PRESET MEMORY** on the remote control. The station is stored.
6. Repeat steps 2 to 5 to store other stations.
7. To listen a preset station, press **PRESET/FOLDER ∧/∨** on the remote control.

Deleting all the saved stations

1. Press **PRESET DELETE** on the remote control. "DEL", "ALL" will flash up alternately on the unit display.
2. Press **PRESET DELETE** on the remote control to erase all the saved radio stations. "DELETED ALL" will scroll on the unit display.

Seeing information about a Radio station

The FM tuner is supplied with the RDS (Radio Data System) facility. This shows information about the radio station being listened to. Press **RDS/SET** on the remote control repeatedly to cycle through the various data types:

PS	(Programme Service Name) The name of the channel will appear in the display.
PTY	(Programme Type Recognition) The programme type (e.g. Jazz or News) will appear in the display.
RT	(Radio Text) A text message contains special information from the broadcast station. This text may scroll across the display.
CT	(Time controlled by the channel) This shows the time as broadcast by the station.

You can search the radio stations by programme type by pressing **RDS/SET** on the remote control. The display will show the last PTY in use. Press **PTY** one or more times to select your preferred programme type. Press and hold ⏮/⏭. The tuner will search automatically. When a station is found the search will stop.

Sound adjustment

Setting the sound mode

This system has a number of pre-set equalizers. The displayed items for the equalizer may be different depending on sound sources and effects.

You can select a desired sound mode by using **SOUND EFFECT** on the remote control.

On Display	Description
BASS (BASS BLAST) or BASS+ (BASS BLAST+)	Reinforces the bass and powerful sound.
POP CLASSIC ROCK JAZZ	This program lends an enthusiastic atmosphere to the sound, giving you the feeling you are at an actual rock, pop, jazz or classic concert.
TV SOUND	You can enjoy enhanced sound with TV.
STANDARD	You can enjoy optimized sound.

Note

On some speakers, sound may not be heard or heard in low sound depending on the sound mode.

Other Operations

Turn off the sound temporarily

Press 🔇 on the remote control to mute your sound.

You can mute your unit, for example, to answer the telephone, the "MUTE" will appear in the display window.

To cancel it, press 🔇 on the remote control again or change the volume level.

Sleep Timer Setting

Press **SLEEP** on the remote control repeatedly to select delay time between 10 and 180 minutes. After the delay time, the unit will be turned off.

To cancel the sleep function, press **SLEEP** on the remote control repeatedly until "OFF" is appears.

Note

- You can check the remaining time before the unit is turned off. Press **SLEEP** on the remote control to check or change the remaining time.
- You can edit the remain time when the remaining time or "DIM" is displayed.

Dimmer

Press **SLEEP** on the remote control once.
The display window will be darkened by half.

To cancel the sleep function, press **SLEEP** on the remote control repeatedly until "OFF" is appears.

Auto power down

This unit will turn itself off to save electricity in the case were the main unit is not connected to an external device and is not used for 15 minutes.
The unit will also turn itself off after six hours if the main unit has been connected to another device using the analog inputs.

How to disconnect the wireless network connection or the wireless device

Turn off the unit by pressing the power button for more than 5 seconds.

AUTO POWER On

This unit automatically turns on by an input source : LG TV, BT(**Bluetooth)**

When you turn on your TV connected to this unit, this unit recognizes the input signal and selects the suitable function. You can hear the sound from the unit.

If you try to connect your **Bluetooth** device, this unit turns on and connects your **Bluetooth** device.
You can play your music.

When you turn off this unit by pressing ⏻ on the unit for 5 seconds each time, you can turn on or off the AUTO POWER function.

On Display	Description
ON-AUTO POWER	AUTO POWER function is turned on.
OFF-AUTO POWER	AUTO POWER function is turned off.

Note

- Depending on the connected device, this function may not operate.
- Depending on the connected device, the unit turns on but **Bluetooth** function may not be connected.
- If you disconnect **Bluetooth** connection by this unit, some **Bluetooth** devices try to connect to the unit continually. Therefore it is recommended to disconnect the connection before turning off the unit.
- If you turn on the unit using LG TV or **Bluetooth** function, proper function of this unit is turned on.
- If you have already paired with this unit, this unit can automatically turn on by an input source when this unit is turned off.

Auto function change

This unit recognizes input signals such as BT(**Bluetooth**), LG TV and AUX 1 and then automatically changes to the suitable function.

When you try to connect Bluetooth device

When you try to connect your **Bluetooth** device to this unit, **Bluetooth** function is selected.
Play your music on the **Bluetooth** device.

When AUX IN 1(3.5 mm stereo cable) is connected

When you connect the portable device to the **AUX IN 1** connector, AUX 1 function is selected.
Play your music on the portable device.

When LG TV is connected

When you turn on your LG TV connected by LG Sound Sync, this unit changes the function to LG TV.
You can hear the sound from your TV.

Note

- This function only works with devices that were previously connected.
- If the **Bluetooth** connection lock function is set, **Bluetooth** and LG TV connection will be only available on **Bluetooth** and LG TV function. (Page 19)

Setting the Clock

1. Turn the unit on.
2. Press and hold **CLOCK** on the remote control.
3. Select time mode by pressing ⏮ / ⏭ on the remote control.

   - AM 12:00 (for an A and P display) or 0:00 (for a 24 hour display).
4. Press **RDS/SET** on the remote control to confirm your selection.
5. Select the hours by pressing ⏮ / ⏭ on the remote control.
6. Press **RDS/SET** on the remote control.
7. Select the minutes by pressing ⏮ / ⏭ on the remote control.
8. Press **RDS/SET** on the remote control.

Using your player as an alarm clock

1. Turn the unit on.
2. Press and hold **ALARM** on the remote control.
3. Press⏮ / ⏭ on the remote control to change the hours and minutes and press **RDS/SET** on the remote control to save.
4. Press ⏮ / ⏭ on the remote control to select function and press **RDS/SET** on the remote control to save.
   -Press ⏮ / ⏭ on the remote control to select a preset number when you select tuner and then, press **RDS/SET** on the remote control.
   If there is no preset number, this step is skipped.
5. Press ⏮ / ⏭ on the remote control to change the volume and press **RDS/SET** on the remote control to save.

Note

- If you set the clock time, you can check the time by pressing **CLOCK** on the remote control even when the player is turned off.
- You can set alarm after you set the clock time.
- If you set the clock time and alarm, you can check the alarm setting information by pressing **ALARM** on the remote control even when the unit is turned off.
- You can select ALARM ON/OFF mode by pressing **ALARM** on the remote control.

LG Sound Sync

You can control some functions of this unit by your TV's remote control with LG Sound Sync. It is compatible with LG TV that supports LG Sound Sync. Make sure your TV has the LG Sound Sync logo.

Controllable function by LG TV's remote control : Volume up/down, mute.

Refer to the TV's instruction manual for the details of LG Sound Sync.

1. Turn on the unit by pressing ⏻.
2. Press **F** until LG TV function is selected.
3. Set up the sound output of TV to listen to the sound through this unit :
   TV setting menu [Sound] → [TV Sound output] → [LG Sound Sync (Wireless)]

   "PAIRED" appears on the display window for about 3 seconds and then you can see "LG TV" on the display window if the TV and this unit are connected normally.

Note

- You can also use the remote control of this unit while using LG Sound Sync. If you use TV's remote control again, the unit synchronizes with the TV.
  (According to TV Specifications, the volume and mute of this unit synchronize with TV.)
- If the connection fails, check the conditions of this unit and your TV : power, function.
- Make sure of the condition of this unit and the connection in the cases below when using LG Sound Sync.
  - The unit is turned off.
  - Changing to a different function.
  - Disconnecting the wireless connection caused by interference or a distance.
- The amount of time to turn off this unit is different depending on your TV.
- If you try to change the function on using the LG TV function, volume will be changed according to the LG TV volume level.
- Details of TV setting menu vary depending on models of your TV.
- If you turned off the unit directly by pressing ⏻, LG Sound Sync will be disconnected.
  To use this function again, you should reconnect the TV and the unit.
- The volume may be increased when the TV and this unit is connected by LG Sound Sync. Decrease the TV volume and then connect with this unit.
- When you turn on your LG TV connected by LG Sound Sync or enter LG TV function, this unit changes the function to LG TV automatically.
- You should set the TV Sound output manually depending on the TV version.
- If you control TV volume when this unit and TV are connected by LG Sound Sync, this unit may louder the volume due to synchronizing volume with TV's.

WIRELESS PARTY LINK Connection

You can enjoy the sound by using two speakers.
For enjoying WIRELESS PARTY LINK, you need to purchase another speaker.

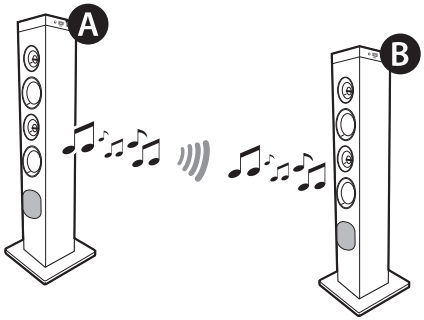

1. Press and hold **F/ DUAL** on the unit.
   ROLE SELECT appears in the display window.
2. Press **F/ DUAL** repeatedly or press ⏮/⏭ on the unit to select LEFT or RIGHT.
   - Ⓐ unit: Selects LEFT.
   - Ⓑ unit: Selects RIGHT.

   Two units try to connect with each other.
3. When these units are successfully connected each other, each of connected device names appears in the each unit.

Note

- When two RL3 are connected via WIRELESS PARTY LINK,only MP3, OGG and WMA files can be played in USB mode.
  Lossless Audio Codec [FLAC, M4A(ALAC), WAV] files are skipped automatically.
- Connection is canceled when **F/ DUAL** button is pressed during connecting in DUAL mode.
- If you are using the LG Sound Sync, this function is not available. If you connect the LG TV function, "NOT SUPPORT" appears in the display window.
- When WIRELESS PARTY LINK is disconnected, RIGHT unit is changed to BT function.
- If the connection has failed, "FAILED" appears in the display window.
- WIRELESS PARTY LINK connection will be disconnected when you turn off the unit.
- Sound of LEFT unit and RIGHT unit may be different depending on playback status or source.

Note

- Check the following information when connecting to **Bluetooth**.
  - You can connect only one **Bluetooth** device in the LEFT unit. You cannot connect **Bluetooth** device to the RIGHT unit.
  - WIRELESS PARTY LINK connection is only supported on Android devices.
  - Removable/detachable **Bluetooth** devices (ex. Dongle etc.) will not support WIRELESS PARTY LINK connection.
  - If you connect WIRELESS PARTY LINK while you are playing connected **Bluetooth** device, the unit may be reconnected again, depending on phone specification.
- Functions are syncronized in DUAL mode as shown below.
  - Volume is not synchronized on LG TV function.

MODE	Function
DUAL MODE (Bi-directional synchronization with LEFT and RIGHT)	Power off
	Volume
	Mute
	Sound Effect

Troubleshooting

General

Problem	Cause & Solution
The unit does not work properly	• Turn off the power of this unit and the connected external device (TV, Woofer, DVD-player, Amplifier, etc.) and turn them on again. • Disconnect the power cord of this unit and the connected external device (TV, Woofer, DVD-player, Amplifier, etc.) and then try connecting again. • Previous setting may not be saved when device power is shut off.
No Power	• The power cord is not plugged in. Plug in the power cord. • Check whether electricity failed. Check the condition by operating other electronic devices.
No sound	• Check whether you select right function. Press function button and check if you have selected the right function.
Radio stations cannot be tuned in properly	• The antenna is positioned or connected poorly. Connect the antenna securely. • The signal strength of the radio station is too weak. Tune to the station manually. • No stations have been preset or preset stations have been cleared (when tuning by scanning preset channels). Preset some radio stations, see page 20 for details.
The remote control does not work properly	• The remote control is too far from the unit. Operate the remote control within about 7 m (23 feet). • There is an obstacle in the path of the remote control and the unit. Remove the obstacle. • The batteries in the remote control are exhausted. Replace the batteries with new ones.
LG Sound Sync does not work	• Check whether your LG TV supports LG Sound Sync. • Check connection of LG Sound Sync. • Check sound setting of your TV and this unit.
The AUTO POWER function does not work.	• Check connection of the external device such as TV or **Bluetooth** device. • Depending on the connected device, this function may not operate.

General specifications

General	
Power requirements	Refer to the main label on the unit.
Power consumption	Refer to the main label on the unit.
	Networked standby : 0.5 W (If all network ports are activated.)
Dimensions (W x H x D)	Approx. 235 mm x 962 mm x 250 mm
Operating temperature	5 °C to 35 °C
Operating humidity	60 %

Inputs	
Analog audio in (AUX IN 2)	0.6 Vrms (1 kHz, 0 dB), 600 Ω, RCA jack (L, R) .
Portable in (AUX IN 1)	0.4 Vrms (3.5 mm stereo jack) x 1

Tuner	
FM Tuning Range	87.5 to 108.0 MHz or 87.50 to 108.00 MHz

System	
Frequency Response	40 to 20,000 Hz
Signal-to-noise ratio	More than 75 dB
Dynamic range	More than 80 dB
Bus Power Supply (USB)	5 V ⎓ 500 mA

Amplifier (RMS Output power)	
Total output	130 W RMS
Front	30 W RMS X 2 (4 Ω at 1 kHz, 10 % THD)
Sub Woofer	70 W RMS X 1 (6 Ω at 1 kHz, 10 % THD)

- Design and specifications are subject to change without notice.

Trademarks and Licenses

The **Bluetooth®** word mark and logos are registered trademarks owned by the **Bluetooth** SIG, Inc. and any use of such marks by LG Electronics is under license.

Other trademarks and trade names are those of their respective owners."

Maintenance

Handling the Unit

When shipping the unit

Please save the original shipping carton and packing materials. If you need to ship the unit, for maximum protection, re-pack the unit as it was originally packed at the factory.

Keeping the exterior surfaces clean

Do not use volatile liquids such as insecticide spray near the unit. Wiping with strong pressure may damage the surface. Do not leave rubber or plastic products in contact with the unit for a long period of time.

Cleaning the unit

To clean the player, use a soft, dry cloth. If the surfaces are extremely dirty, use a soft cloth lightly moistened with a mild detergent solution. Do not use strong solvents such as alcohol, benzine, or thinner, as these might damage the surface of the unit.

LG

Life's Good