LG
Life's Good

OWNER'S MANUAL
LED TV

* LG LED TV applies LCD screen with LED backlights.

Please read this manual carefully before operating your set and retain it for future reference.

LA79**
LA86**
LA96**
LA98**

P/NO : MFL67706412 (1304-REV02)
Printed in Korea

www.lg.com

ENGLISH

TABLE OF CONTENTS

3 SAFETY INSTRUCTIONS

8 Viewing 3D Imaging (Only 3D models)

9 INSTALLATION PROCEDURE

9 ASSEMBLING AND PREPARING

9 Unpacking
13 Separate purchase
14 Parts and buttons
15 Lifting and moving the TV
16 Setting up the TV
16 - Attaching the stand
18 Mounting on a table
19 Mounting on a wall
21 Tidying cables
21 Using Built-in Camera
22 Preparing Built-in Camera
22 - Name of Parts of Built-in Camera
22 - Checking the Camera's Shooting Range

23 MAKING CONNECTIONS

23 Antenna connection
24 HDMI connection
24 DVI to HDMI connection
25 Component connection
25 Composite connection
26 Audio connection
26 - Digital optical audio connection
26 Headphone connection
27 USB connection
27 MHL connection

28 REMOTE CONTROL

29 MAGIC REMOTE CONTROL FUNCTIONS

30 Registering Magic Remote Control
30 How to use Magic Remote Control
30 Precautions to Take when Using the Magic Remote Control

31 USING THE USER GUIDE

32 MAINTENANCE

32 Cleaning your TV
32 - Screen, frame, cabinet and stand
32 - Power cord

32 TROUBLESHOOTING

33 ENVIRONMENTAL INFORMATION

33 WEEE

34 SPECIFICATIONS

40 LICENSES

40 OPEN SOURCE SOFTWARE NOTICE

40 EXTERNAL CONTROL DEVICE SETUP

WARNING

- **If you ignore the warning message, you may be seriously injured or there is a possibility of accident or death.**

CAUTION

- **If you ignore the caution message, you may be slightly injured or the product may be damaged.**

NOTE

- **The note helps you understand and use the product safely. Please read the note carefully before using the product.**

SAFETY INSTRUCTIONS

Please read these safety precautions carefully before using the product.

WARNING

- Do not place the TV and/ or remote control in the following environments:
  - A location exposed to direct sunlight
  - An area with high humidity such as a bathroom
  - Near any heat source such as stoves and other devices that produce heat
  - Near kitchen counters or humidifiers where they can easily be exposed to steam or oil
  - An area exposed to rain or wind
  - Near containers of water such as vases

  Otherwise, this may result in fire, electric shock, malfunction or product deformation.

- Do not place the product where it might be exposed to dust.
  This may cause a fire hazard.

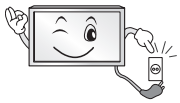

- Mains Plug is the TV connecting/disconnecting device to AC mains electric supply.
  This plug must remain readily attached and operable when TV is in use.

- Do not touch the power plug with wet hands. Additionally, if the cord pin is wet or covered with dust, dry the power plug completely or wipe dust off.
  You may be electrocuted due to excess moisture.

- Make sure to connect Mains cable to compliant AC mains socket with Grounded earth pin. (Except for devices which are not grounded on earth.)
  Otherwise possibility you may be electrocuted or injured.

- Insert power cable plug completely into wall socket otherwise if not secured completely into socket, fire ignition may break out.

- Ensure the power cord does not come into contact with hot objects such as a heater. This may cause a fire or an electric shock hazard.

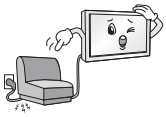

- Do not place a heavy object, or the product itself, on power cables.
  Otherwise, this may result in fire or electric shock.

- Bend antenna cable between inside and outside building to prevent rain from flowing in. This may cause water damaged inside the Product and could give an electric shock.

- When mounting TV onto wall make sure to neatly install and isolate cabling from rear of TV as to not create possibility of electric shock / fire hazard.

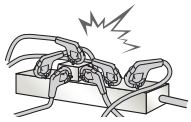

- Do not plug too many electrical devices into a single multiple electrical outlet. Otherwise, this may result in fire due to over-heating.

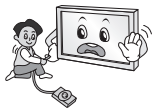

- Do not drop the product or let it fall over when connecting external devices.
  Otherwise, this may result in injury or damage to the product.

- Keep the anti-moisture packing material or vinyl packing out of the reach of children.
  Anti-moisture material is harmful if swallowed. If swallowed by mistake, force the patient to vomit and visit the nearest hospital. Additionally, vinyl packing can cause suffocation. Keep it out of the reach of children.

- Do not let your children climb or cling onto the TV.
  Otherwise, the TV may fall over, which may cause serious injury.

- Dispose of used batteries carefully to ensure that a small child does not consume them.
  Please seek Doctor- Medical Attention immediately if child consumes batteries.

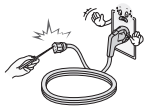

- Do not insert any metal objects/conductors (like a metal chopstick/cutlery/ screwdriver) between power cable plug and input Wall Socket while it is connected to the input terminal on the wall. Additionally, do not touch the power cable right after plugging into the wall input terminal.
  You may be electrocuted. (Depending on model)

- Do not put or store inflammable substances near the product.
  There is a danger of combustion/explosion or fire due to careless handling of the inflammable substances.

- Do not drop metallic objects such as coins, hair pins, chopsticks or wire into the product, or inflammable objects such as paper and matches. Children must pay particular attention.
  Electrical shock, fire or injury can occur. If a foreign object is dropped into the product, unplug the power cord and contact the service centre.

- Do not spray water on the product or scrub with an inflammable substance (thinner or benzene). Fire or electric shock accident can occur.

- Do not allow any impact, shock or any objects to fall into the unit, and do not drop anything onto the screen.
  You may be injured or the product can be damaged.

- Never touch this product or antenna during a thunder or lighting storm.
  You may be electrocuted.

- Never touch the wall outlet when there is leakage of gas, open the windows and ventilate.
  It may cause a fire or a burn by a spark.

- Do not disassemble, repair or modify the product at your own discretion.
  Fire or electric shock accident can occur.
  Contact the service centre for check, calibration or repair.

- If any of the following occur, unplug the product immediately and contact your local service centre.
  - The product has been impacted by shock
  - The product has been damaged
  - Foreign objects have entered the product
  - The product produced smoke or a strange smell

  This may result in fire or electric shock.

- Unplug the TV from AC mains wall socket if you do not intend to use the TV for a long period of time.
  Accumulated dust can cause fire hazard and insulation deterioration can cause electric leakage/shock/fire.

- Apparatus shall not be exposed to dripping or splashing and no objects filled with liquids, such as vases, shall be placed on the apparatus.

CAUTION

- Install the product where no radio wave occurs.

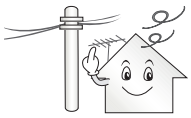

- There should be enough distance between an outside antenna and power lines to keep the former from touching the latter even when the antenna falls.
  This may cause an electric shock.

- Do not install the product on places such as unstable shelves or inclined surfaces. Also avoid places where there is vibration or where the product cannot be fully supported.
  Otherwise, the product may fall or flip over, which may cause injury or damage to the product.

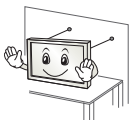

- If you install the TV on a stand, you need to take actions to prevent the product from overturning. Otherwise, the product may fall over, which may cause injury.

- If you intend to mount the product to a wall, attach VESA standard mounting interface (optional parts) to the back of the product. When you install the set to use the wall mounting bracket (optional parts), fix it carefully so as not to drop.
- Only use the attachments / accessories specified by the manufacturer.

- When installing the antenna, consult with a qualified service technician.
  If not installed by a qualified technician, this may create a fire hazard or an electric shock hazard.

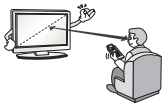

- We recommend that you maintain a distance of at least 2 to 7 times the diagonal screen size when watching TV.
  If you watch TV for a long period of time, this may cause blurred vision.

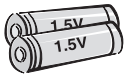

- Only use the specified type of battery.
  This could cause damage to the remote control.

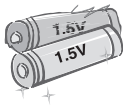

- Do not mix new batteries with old batteries.
  This may cause the batteries to overheat and leak.

- Batteries should not be exposed to excessive heat. For example, keep away from direct sunlight, open fireplace and electric heaters.
- Do not place non-rechargeable batteries in charging device.

- Make sure there are no objects between the remote control and its sensor.

- Signal from Remote Control can be interrupted due to external/internal lighting eg Sunlight, fluorescent lighting.
  If this occurs turn off lighting or darken viewing area.

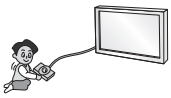

- When connecting external devices such as video game consoles, make sure the connecting cables are long enough.
  Otherwise, the product may fall over, which may cause injury or damage the product.

- Do not turn the product On/Off by plugging-in or unplugging the power plug to the wall outlet. (Do not use the power plug for switch.)
  It may cause mechanical failure or could give an electric shock.

ENGLISH

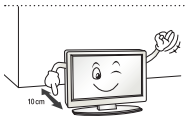

- Please follow the installation instructions below to prevent the product from overheating.
  - The distance between the product and the wall should be more than 10 cm.
  - Do not install the product in a place with no ventilation (e.g., on a bookshelf or in a cupboard).
  - Do not install the product on a carpet or cushion.
  - Make sure the air vent is not blocked by a tablecloth or curtain.

  Otherwise, this may result in fire.

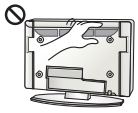

- Take care not to touch the ventilation openings when watching the TV for long periods as the ventilation openings may become hot. This does not affect the operation or performance of the product.

- Periodically examine the cord of your appliance, and if its appearance indicates damage or deterioration, unplug it, discontinue use of the appliance, and have the cord replaced with an exact replacement part by an authorized servicer.

- Prevent dust collecting on the power plug pins or outlet. This may cause a fire hazard.

- Protect the power cord from physical or mechanical abuse, such as being twisted, kinked, pinched, closed in a door, or walked upon. Pay particular attention to plugs, wall outlets, and the point where the cord exits the appliance.

- Do not press strongly upon the panel with a hand or sharp object such as nail, pencil or pen, or make a scratch on it, as it may cause damage to screen.

- Avoid touching the screen or holding your finger(s) against it for long periods of time. Doing so may produce some temporary or permanent distortion/damage to screen.

- When cleaning the product and its components, unplug the power first and wipe it with a soft cloth. Applying excessive force may cause scratches or discolouration. Do not spray with water or wipe with a wet cloth. Never use glass cleaner, car or industrial shiner, abrasives or wax, benzene, alcohol etc., which can damage the product and its panel. Otherwise, this may result in fire, electric shock or product damage (deformation, corrosion or breakage).

- As long as this unit is connected to the AC wall outlet, it is not disconnected from the AC power source even if you turn off this unit by SWITCH.

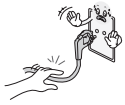

- When unplugging the cable, grab the plug and unplug it, by pulling at the plug. Don’t pull at the cord to unplug the power cord from the power board, as this could be hazardous.

- When moving the product, make sure you turn the power off first. Then, unplug the power cables, antenna cables and all connecting cables. The TV set or power cord may be damaged, which may create a fire hazard or cause electric shock.

- When moving or unpacking the product, work in pairs because the product is heavy. Otherwise, this may result in injury.

- Contact the service centre once a year to clean the internal parts of the product. Accumulated dust can cause mechanical failure.

- Refer all servicing to qualified service personnel. Servicing is required when the apparatus has been damaged in any way, such as power supply cord or plug is damaged, liquid has been spilled or objects have fallen into the apparatus, the apparatus has been exposed to rain or moisture, does not operate normally, or has been dropped.

- If the product feels cold to the touch, there may be a small “flicker” when it is turned on. This is normal, there is nothing wrong with product.

- The panel is a high technology display product with resolution of two million to six million pixels. You may see tiny black dots and/or brightly coloured dots (red, blue or green) at a size of 1 ppm on the panel. This does not indicate a malfunction and does not affect the performance and reliability of the product. This phenomenon also occurs in third-party products and is not subject to exchange or refund.

- You may find different brightness and colour of the panel depending on your viewing position(left/right/top/down). This phenomenon occurs due to the characteristic of the panel. It is not related with the product performance, and it is not malfunction.

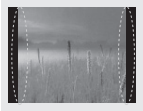

- Displaying a still image (e.g., broadcasting channel logo, on-screen menu, scene from a video game) for a prolonged time may cause damage to the screen, resulting in retention of the image, which is known as image sticking. The warranty does not cover the product for image sticking.
  Avoid displaying a fixed image on your television’s screen for a prolonged period (2 or more hours for LCD, 1 or more hours for Plasma).
  Also, if you watch the TV at a ratio of 4:3 for a long time, image sticking may occur on the borders of the panel.
  This phenomenon also occurs in third-party products and is not subject to exchange or refund.

- **Generated Sound**
  “Cracking” noise: A cracking noise that occurs when watching or turning off the TV is generated by plastic thermal contraction due to temperature and humidity. This noise is common for products where thermal deformation is required.
  Electrical circuit humming/panel buzzing: A low level noise is generated from a high-speed switching circuit, which supplies a large amount of current to operate a product. It varies depending on the product.
  This generated sound does not affect the performance and reliability of the product.

Viewing 3D Imaging (Only 3D models)

WARNING

Viewing Environment

- Viewing Time
  - When watching 3D contents, take 5 - 15 minute breaks every hour. Viewing 3D contents for a long period of time may cause headache, dizziness, fatigue or eye strain.

Those that have a photosensitive seizure or chronic illness

- Some users may experience a seizure or other abnormal symptoms when they are exposed to a flashing light or particular pattern from 3D contents.
- Do not watch 3D videos if you feel nausea, are pregnant and/ or have a chronic illness such as epilepsy, cardiac disorder, or blood pressure disease, etc.
- 3D Contents are not recommended to those who suffer from stereo blindness or stereo anomaly. Double images or discomfort in viewing may be experienced.
- If you have strabismus (cross-eyed), amblyopia (weak eyesight) or astigmatism, you may have trouble sensing depth and easily feel fatigue due to double images. It is advised to take frequent breaks than the average adult.
- If your eyesight varies between your right and left eye, revise your eyesight prior to watching 3D contents.

Symptoms which require discontinuation or refraining from watching 3D contents

- Do not watch 3D contents when you feel fatigue from lack of sleep, overwork or drinking.
- When these symptoms are experienced, stop using/ watching 3D contents and get enough rest until the symptom subsides.
  - Consult your doctor when the symptoms persist. Symptoms may include headache, eyeball pain, dizziness, nausea, palpitation, blurriness, discomfort, double image, visual inconvenience or fatigue.

CAUTION

Viewing Environment

- Viewing Distance
  - Maintain a distance of at least twice the screen diagonal length when watching 3D contents. If you feel discomfort in viewing 3D contents, move further away from the TV.

Viewing Age

- Infants/Children
  - Usage/ Viewing 3D contents for children under the age of 5 are prohibited.
  - Children under the age of 10 may overreact and become overly excited because their vision is in development (for example: trying to touch the screen or trying to jump into it. Special monitoring and extra attention is required for children watching 3D contents.
  - Children have greater binocular disparity of 3D presentations than adults because the distance between the eyes is shorter than one of adults. Therefore they will perceive more stereoscopic depth compared to adults for the same 3D image.
- Teenagers
  - Teenagers under the age of 19 may react with sensitivity due to stimulation from light in 3D contents. Advise them to refrain from watching 3D contens for a long time when they are tired.
- Elderly
  - The elderly may perceive less 3D effect compared to the youth. Do not sit closer to the TV than the recommended distance.

Cautions when using the 3D glasses

- Make sure to use LG 3D glasses. Otherwise, you may not be able to view 3D videos properly.
- Do not use 3D glasses instead of your normal glasses, sunglasses or protective goggles.
- Using modified 3D glasses may cause eye strain or image distortion.
- Do not keep your 3D glasses in extremely high or low temperatures. It will cause deformation.
- The 3D glasses are fragile and are easy to be scratched. Always use a soft, clean piece of cloth when wiping the lenses. Do not scratch the lenses of the 3D glasses with sharp objects or clean/wipe them with chemicals.

NOTE

- Image shown may differ from your TV.
- Your TV's OSD (On Screen Display) may differ slightly from that shown in this manual.
- The available menus and options may differ from the input source or product model that you are using.
- New features may be added to this TV in the future.
- The TV can be placed in standby mode in order to reduce the power consumption. And the TV should be turned off if it will not be watched for some time, as this will reduce energy consumption.
- The energy consumed during use can be significantly reduced if the level of brightness of the picture is reduced, and this will reduce the overall running cost.

INSTALLATION PROCEDURE

1 Open the package and make sure all the accessories are included.
2 Attach the stand to the TV set.
3 Connect an external device to the TV set.
4 Make sure the network connection is available.
You can use the TV network functions only when the network connection is made.

ASSEMBLING AND PREPARING

Unpacking

Check your product box for the following items. If there are any missing accessories, contact the local dealer where you purchased your product. The illustrations in this manual may differ from the actual product and item.

CAUTION

- Do not use any unapproved items to ensure the safety and product life span.
- Any damages or injuries by using unapproved items are not covered by the manufacturer's warranty.
- Some models have a thin film attached on to the screen and this must not be removed.

NOTE

- The items supplied with your product may vary depending on the model.
- Product specifications or contents of this manual may be changed without prior notice due to upgrade of product functions.
- For an optimal connection, HDMI cables and USB devices should have bezels less than 10 mm thick and 18 mm width. Use an extension cable that supports USB 2.0 if the USB cable or USB memory stick does not fit into your TV's USB port.

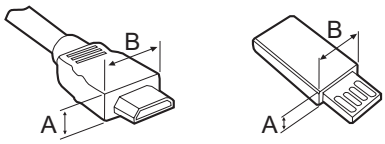

*A ≦ 10 mm
*B ≦ 18 mm

ENGLISH

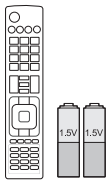

Remote control, batteries (AAA)
(Depending on model)
(See p. 28)

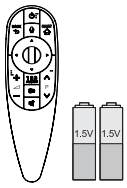

Magic remote control, batteries (AA)
(Depending on model)
(See p. 29)

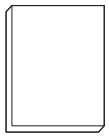

Owner's manual

Power Cord
(Depending on model)

Dual play glasses
(Depending on model)

Cinema 3D Glasses
The number of 3D glasses may differ depending on the model or country.

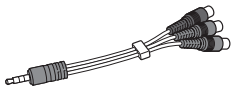

Component video cable
(See p. 25)

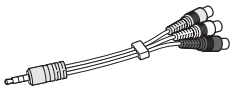

Composite video cable
(See p. 25)

Tag on
(Depending on model)

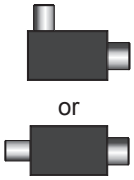

Isolator
(Depending on model)
(See p. 12)

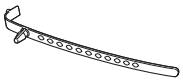

Cable holder
(Depending on model)
(See p. 21)

Cable Management
2 EA
(Only LA79**)
(See p. 21)

Stand Screws
8EA, M4 x 14
(Only LA79**)
(See p. 16)

Stand Screws
4EA, M4 x 16
(Only LA86**)
(See p. 16)

Stand Screws
4EA, M4 x 20
(Only LA96**)
(See p. 16)

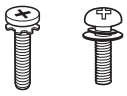

Stand Screws
4EA, M4 x 20
6EA, M5 x 16
(Only LA98**)
(See p. 17)

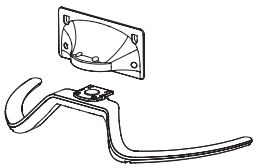

Stand Base
(Only LA79**)
(See p. 16)

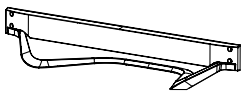

Stand Base
(Only LA86**, LA96**)
(See p. 16)

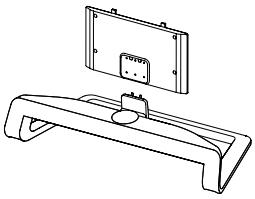

Stand Base/ Stand Body
(Only LA98**)
(See p. 17)

NOTE

- Antenna Isolator Installation Guide
  - Use this to install TV in a place where there is a voltage difference between TV Set and GND of antenna signal.
    - » If there is a voltage difference between TV Set and GND of antenna signal, the antenna contact might be heated and excessive heat might cause an accident.
  - You can improve the safety when watching TV by efficiently removing power voltage from TV antenna. It is recommended to mount the isolator to the wall. If it cannot be mounted to the wall, mount it on the TV. Avoid disconnecting the antenna Isolator after installation.
  - Before starting, be sure that the TV antenna is connected.

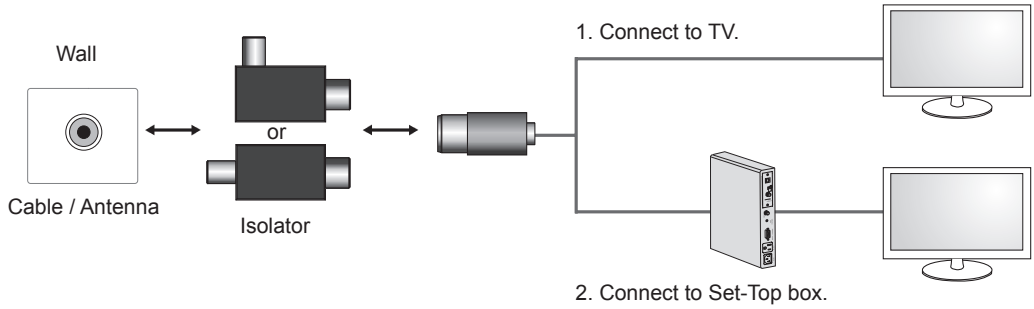

Connect one end of the isolator to cable/antenna jack and the other to TV set or set-top box.

“Equipment connected to the protective earthing of the building installation through the mains connection or through other equipment with a connection to protective earthing - and to a cable distribution system using coaxial cable, may in some circumstances create a fire hazard. Connection to a cable distribution system has therefore to be provided through a device providing electrical isolation below a certain frequency range (galvanic isolator, see EN 60728-11)”

When applying the RF Isolator, a slight loss of signal sensitivity can occur.

Separate purchase

Separate purchase items can be changed or modified for quality improvement without any notification.
Contact your dealer to buy these items.
These devices only work with certain models.

AG-F*DP**
Dual play glasses

AG-F***
Cinema 3D glasses

AN-MR400
Magic remote

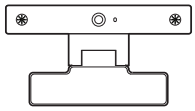

AN-VC5**
Video call camera

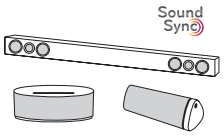

LG Audio device

Tag on

Compatibility	LA79**	LA86**	LA96**	LA98**
AG-F*DP** Dual play glasses	•	•	•	•
AG-F*** Cinema 3D glasses	•	•	•	•
AN-MR400 Magic remote	•	•	•	•
AN-VC5** Video call camera	•	• (Depending on model)		•
LG Audio device	•	•	•	•
Tag on	•	•	•	•

The model name or design may be changed depending on the upgrade of product functions, manufacturer's circumstances or policies.

ENGLISH

Parts and buttons

A type : LA79**

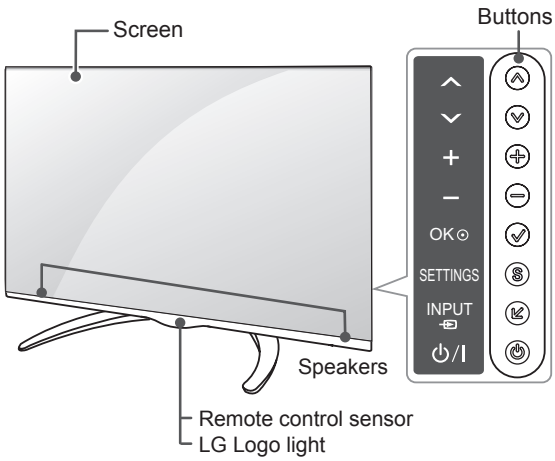

B type : LA86**, LA96**, LA98**

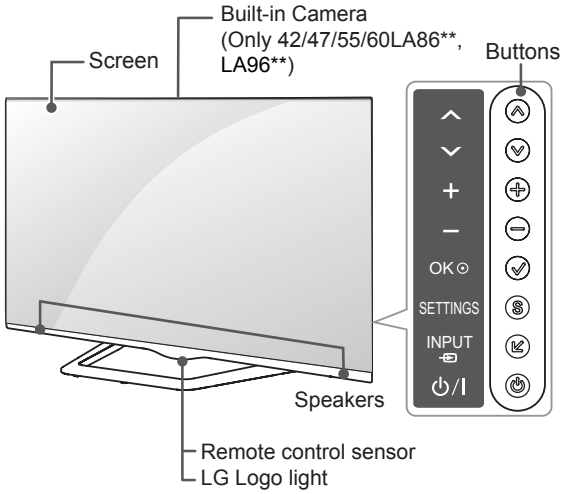

Button	Description
∧ ∨	Scrolls through the saved programmes.
+ −	Adjusts the volume level.
✓	Selects the highlighted menu option or confirms an input.
S	Accesses the main menu, or saves your input and exits the menus.
↙	Changes the input source.
⏻	Turns the power on or off.

NOTE

- You can set the LG Logo light to on or off by selecting **OPTION** in the main menus.

Lifting and moving the TV

Please note the following advice to prevent the TV from being scratched or damaged and for safe transportation regardless of its type and size.

CAUTION

- Avoid touching the screen at all times, as this may result in damage to the screen.

- It is recommended to move the TV in the box or packing material that the TV originally came in.
- Before moving or lifting the TV, disconnect the power cord and all cables.
- When holding the TV, the screen should face away from you to avoid damage.

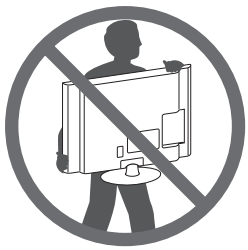

- Hold the top and bottom of the TV frame firmly. Make sure not to hold the transparent part, speaker, or speaker grill area.

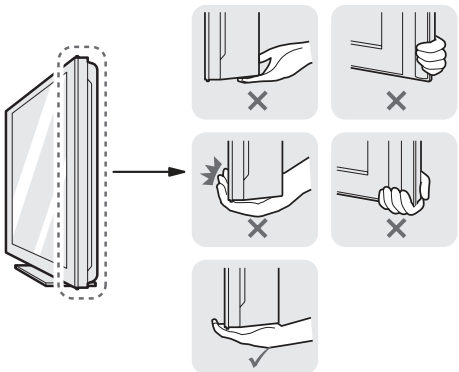

- When transporting a large TV, there should be at least 2 people.
- When transporting the TV by hand, hold the TV as shown in the following illustration.

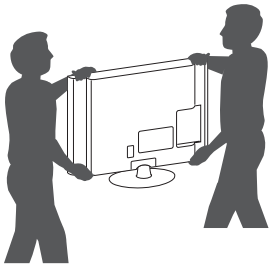

- When transporting the TV, do not expose the TV to jolts or excessive vibration.
- When transporting the TV, keep the TV upright, never turn the TV on its side or tilt towards the left or right.
- Do not apply excessive pressure to cause flexing / bending of frame chassis as it may damage screen.

ENGLISH

Setting up the TV

Image shown may differ from your TV.

Attaching the stand

LA79**

1

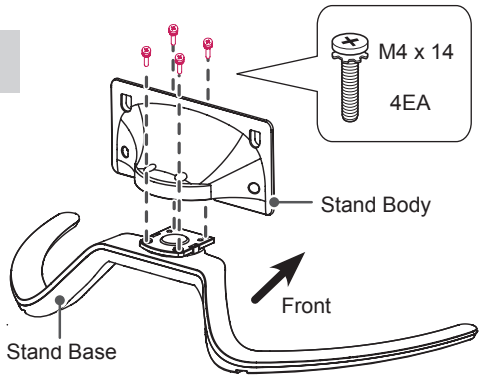

2

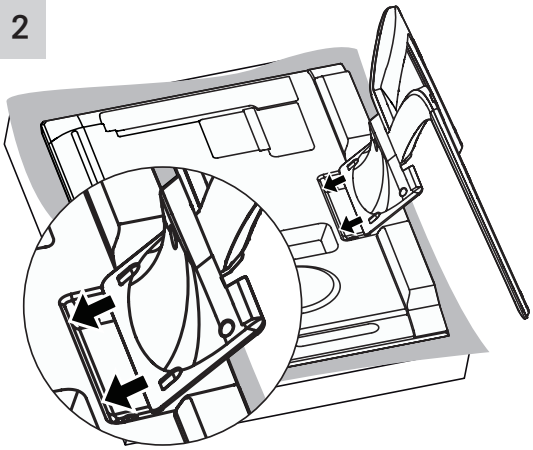

3

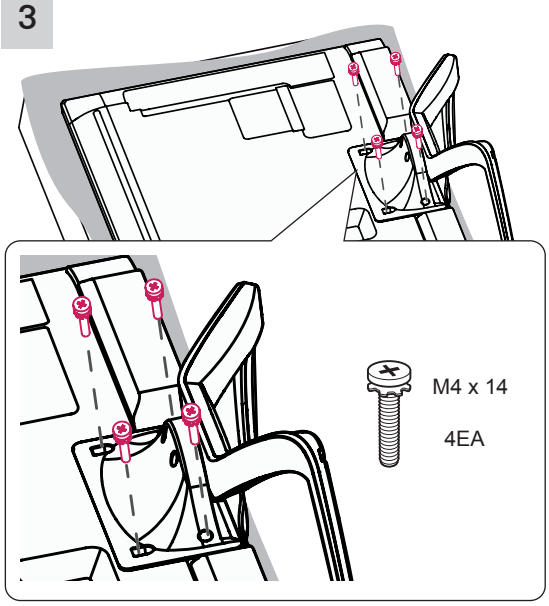

LA86**, LA96**

1

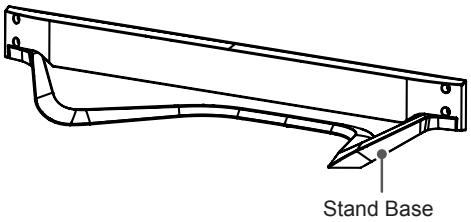

2

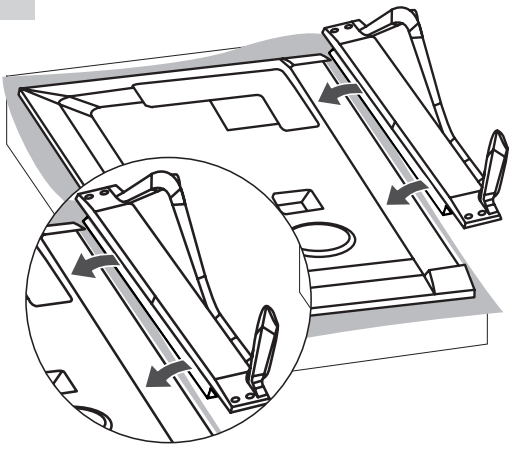

3

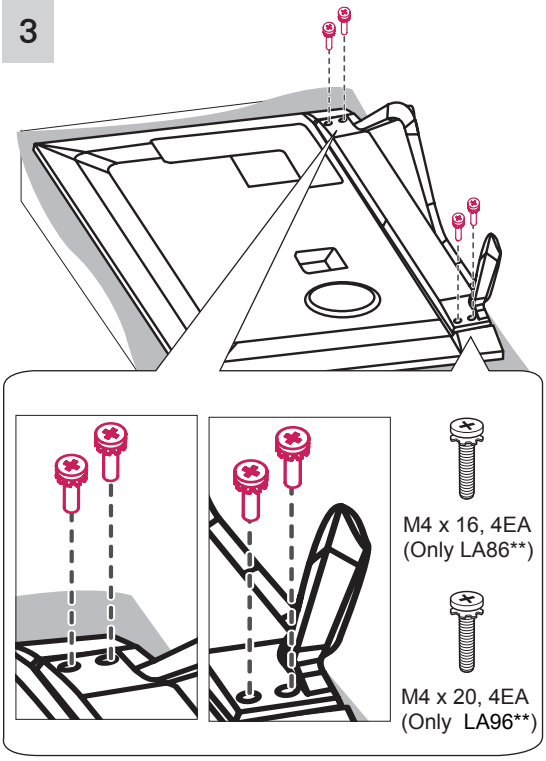

LA98**

1

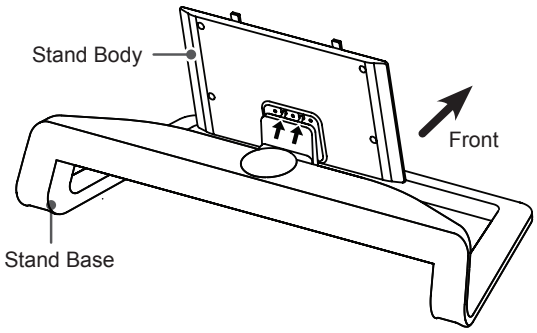

2

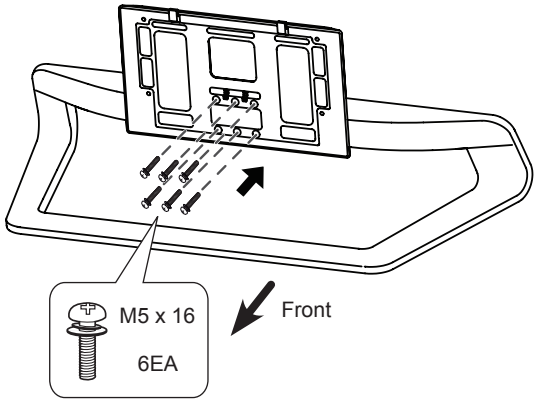

3

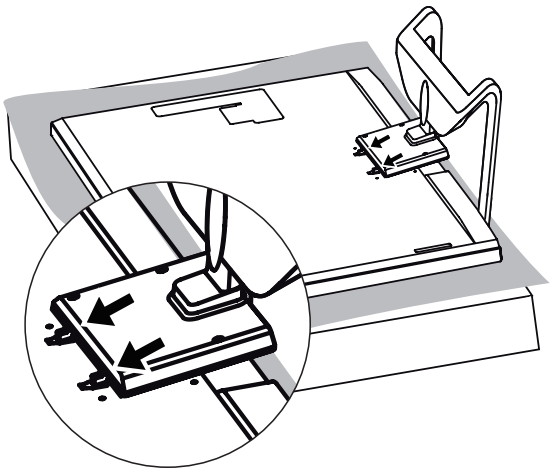

4

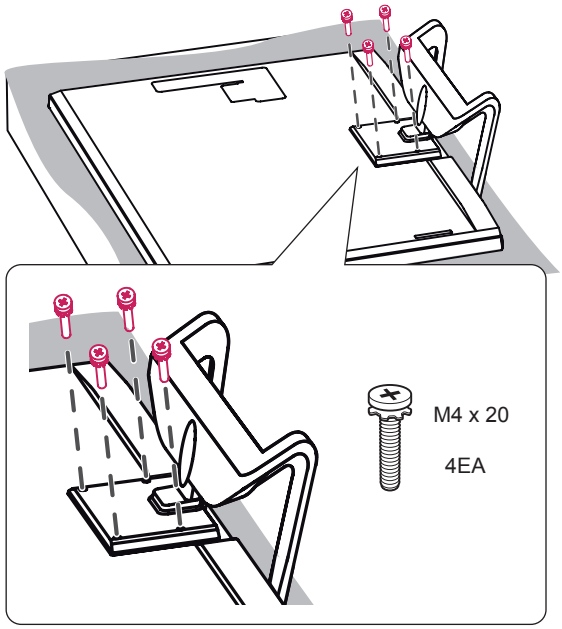

CAUTION

- When attaching the stand to the TV set, place the screen facing down on a cushioned table or flat surface to protect the screen from scratches.
- Make sure that the screws are fastened completely. (If they are not fastened securely enough, the TV may tilt forward after being installed.)
  Do not fasten the screws with excessive force otherwise they may be worn out and become loose.

NOTE

- Remove the stand before installing the TV on a wall mount by performing the stand attachment in reverse.

ENGLISH

Mounting on a table

1 Lift and tilt the TV into its upright position on a table.
- Leave a 10 cm (minimum) space from the wall for proper ventilation.

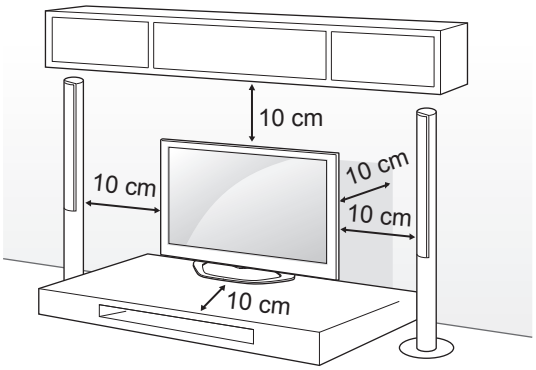

2 Connect the power cord to a wall outlet.

CAUTION

- Do not place the TV near or on sources of heat, as this may result in fire or other damage.

Adjusting the angle of the TV to suit view

(This feature is not available for all models.)

Swivel 15 degrees to the left or right and adjust the angle of the TV to suit your view.
(Only LA79**)

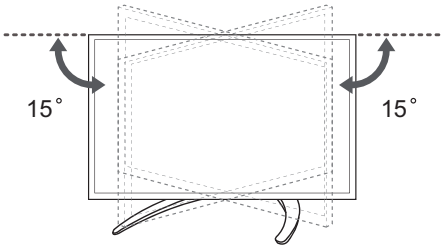

Swivel 10 degrees to the left or right and adjust the angle of the TV to suit your view.
(Only 42/47LA86**)

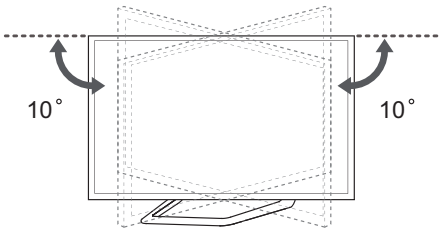

Swivel 8 degrees to the left or right and adjust the angle of the TV to suit your view.
(Only 55/60LA86**)

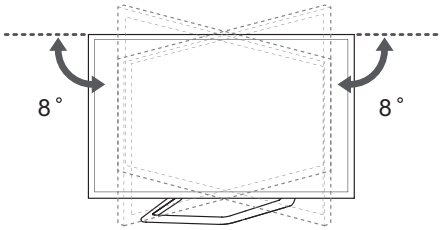

Swivel 7 degrees to the left or right and adjust the angle of the TV to suit your view.
(Only LA98**)

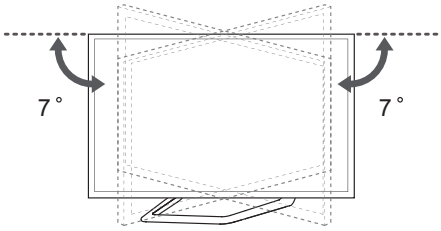

CAUTION

- When adjusting the angle of the product, watch out for your fingers.
» Personal injury may occur if hands or fingers are pinched. If the product is tilted too much, it may fall, causing damage or injury.

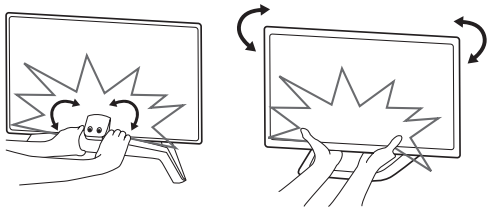

Securing the TV to a wall

(This feature is not available for all models.)

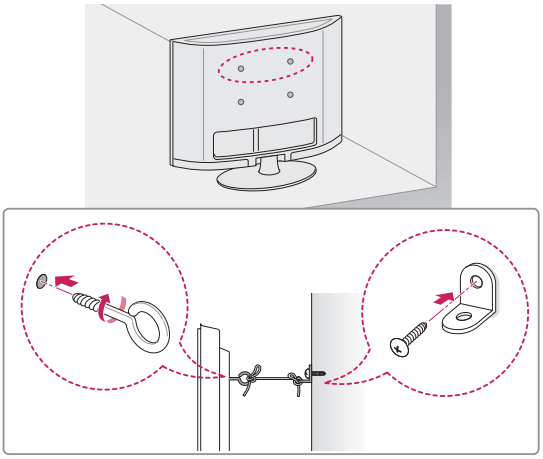

1 Insert and tighten the eye-bolts, or TV brackets and bolts on the back of the TV.
   - If there are bolts inserted at the eye-bolts position, remove the bolts first.
2 Mount the wall brackets with the bolts to the wall. Match the location of the wall bracket and the eye-bolts on the rear of the TV.
3 Connect the eye-bolts and wall brackets tightly with a sturdy rope.
   Make sure to keep the rope horizontal with the flat surface.

CAUTION

- Make sure that children do not climb on or hang on the TV.

NOTE

- Use a platform or cabinet that is strong and large enough to support the TV securely.
- Brackets, bolts and ropes are not provided. You can obtain additional accessories from your local dealer.

WARNING

- If a television is not positioned in a sufficiently stable location, it can be potentially hazardous due to falling. Many injuries, particularly to children, can be avoided by taking simple precautions such as:
  » Using cabinets or stands recommended by the manufacturer of the television.
  » Only using furniture that can safely support the television.
  » Ensuring the television is not overhanging the edge of the supporting furniture.
  » Not placing the television on tall furniture (for example, cupboards or bookcases) without anchoring both the furniture and the television to a suitable support.
  » Not standing the televisions on cloth or other materials placed between the television and supporting furniture.
  » Educating children about the dangers of climbing on furniture to reach the television or its controls.

Mounting on a wall

Attach an optional wall mount bracket at the rear of the TV carefully and install the wall mount bracket on a solid wall perpendicular to the floor. When you attach the TV to other building materials, please contact qualified personnel.

LG recommends that wall mounting be performed by a qualified professional installer.

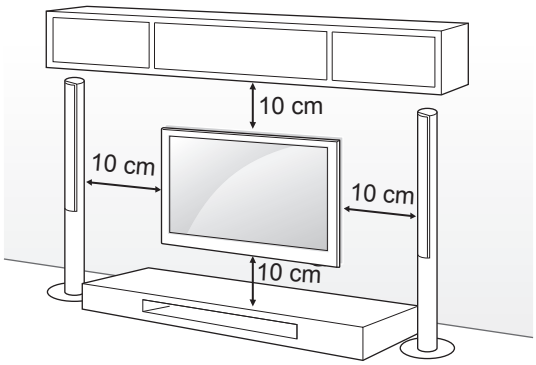

Make sure to use screws and wall mount bracket that meet the VESA standard. Standard dimensions for the wall mount kits are described in the following table.

Separate purchase(Wall Mounting Bracket)

Model	47/55LA79** 42/47/55LA86** 47/55LA96	60LA86**
VESA (A x B)	400 x 400	400 x 400
Standard screw	M6	M6
Number of screws	4	4
Wall mount bracket	LSW430B MSW240	LSW430B
Model	70LA86** 84LA98**	
VESA (A x B)	600 x 400	
Standard screw	M8	
Number of screws	4	
Wall mount bracket	LSW630B	

Wall mount bracket	
LSW430B	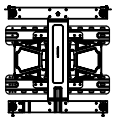
LSW630B	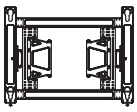
MSW240	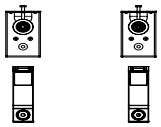

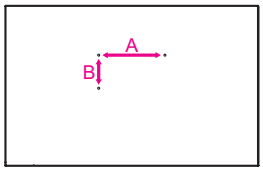

CAUTION

- Disconnect the power first, and then move or install the TV. Otherwise electric shock may occur.
- If you install the TV on a ceiling or slanted wall, it may fall and result in severe injury.
  Use an authorised LG wall mount and contact the local dealer or qualified personnel.
- Do not over tighten the screws as this may cause damage to the TV and void your warranty.
- Use the screws and wall mounts that meet the VESA standard. Any damages or injuries by misuse or using an improper accessory are not covered by the manufacturer's warranty.

NOTE

- Use the screws that are listed on the VESA standard screw specifications.
- The wall mount kit includes an installation manual and necessary parts.
- The wall mount bracket is not provided. You can obtain additional accessories from your local dealer.
- The length of screws may differ depending on the wall mount. Make sure to use the proper length.
- For more information, refer to the manual supplied with the wall mount.

Tidying cables

1 Gather and bind the cables with the Cable Holder and the Cable Management.
2 Fix the Cable Management firmly to the TV.

(Only LA79**)

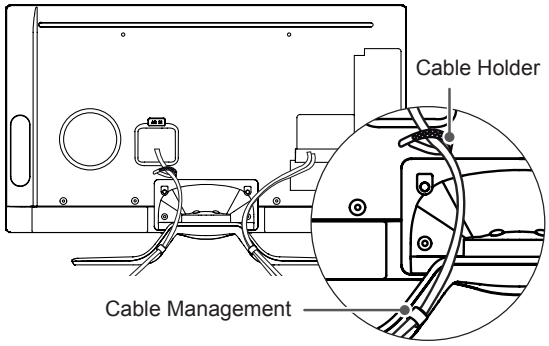

(Only LA86**, LA96**)

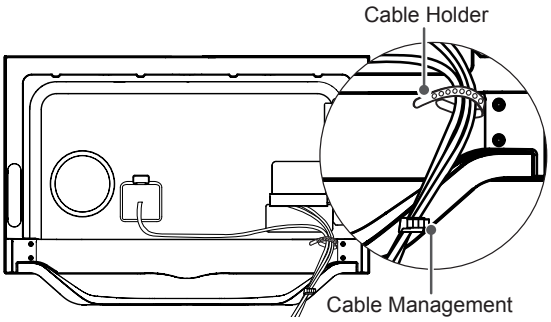

(Only LA98**)

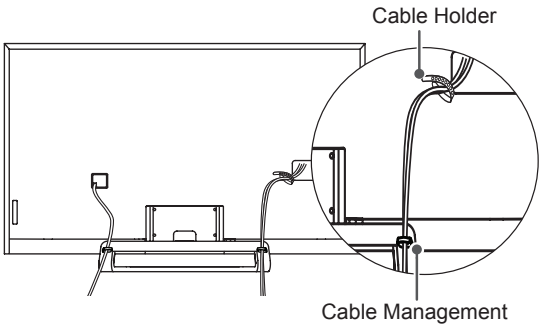

CAUTION

- Do not move the TV by holding the cable holders, as the cable holders may break, and injuries and damage to the TV may occur.

Using Built-in Camera

(Only 42/47/55/60LA86**, LA96**)

This TV does not support the use of an external camera.

NOTE

- Before using the built-in camera, you must recognize the fact that you are legally responsible for the use or misuse of the camera by the relevant national laws including the criminal law.
- The relevant laws include the Personal Information Protection law which regulates the processing and transferring of personal information and the law which regulates the monitoring by camera in a workplace and other places.
- When using the built-in camera, avoid questionable, illegal, or immoral situations. Other than at public places or events, consent to be photographed may be required. We suggest avoiding the following situations:
  (1) Using the camera in areas where the use of camera is generally prohibited such as restroom, locker room, fitting room and security area.
  (2) Using the camera while causing the infringement of privacy.
  (3) Using the camera while causing the violation of the relevant regulations or laws.

ENGLISH

Preparing Built-in Camera

1 Pull up the slide at the back of the TV.

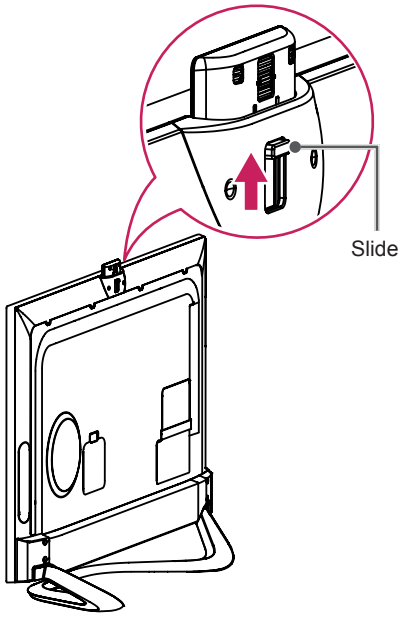

NOTE

- Remove the protective film before using the built-in camera.

2 You can adjust the angle of the camera with the angle adjustment lever on the back of the built-in camera (within 5 degrees vertically).

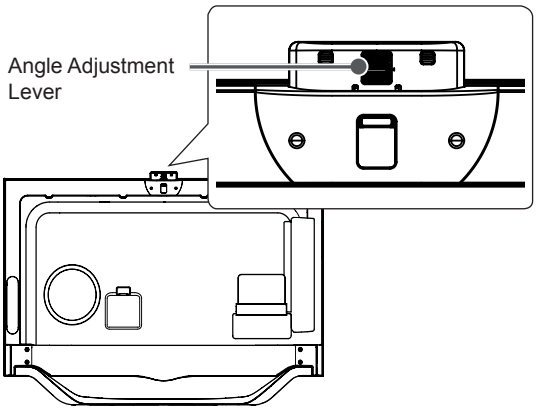

3 Pull down the built-in camera when you are not using it.

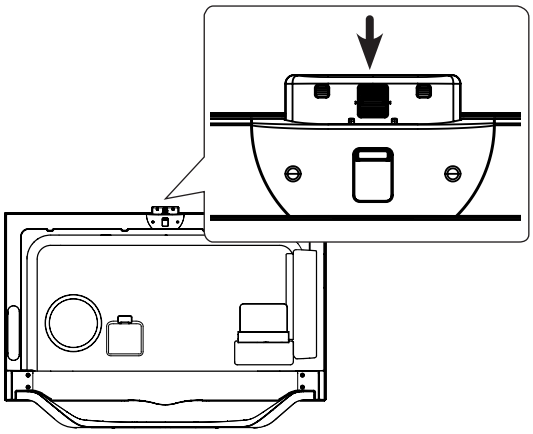

Name of Parts of Built-in Camera

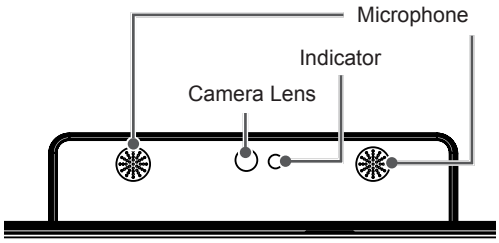

Checking the Camera's Shooting Range

1 Press the **SMART** button on the remote control to display the More menu.
2 Select **Settings** from the More menu and then press the **Wheel(OK)** button.
3 Go to **OPTION** ➡ **Camera Setting Help** and press the **Wheel(OK)** button.

NOTE

- The optimal distance from the camera to use the motion recognition function is between 1.5 and 4.5 m.

MAKING CONNECTIONS

This section on **MAKING CONNECTIONS** mainly uses diagrams for the LA86** models.

Connect various external devices to the TV and switch input modes to select an external device. For more information of external device's connection, refer to the manual provided with each device.
Available external devices are: HD receivers, DVD players, VCRs, audio systems, USB storage devices, PC, gaming devices, and other external devices.

NOTE

- The external device connection may differ from the model.
- Connect external devices to the TV regardless of the order of the TV port.
- If you record a TV programme on a DVD recorder or VCR, make sure to connect the TV signal input cable to the TV through a DVD recorder or VCR. For more information of recording, refer to the manual provided with the connected device.
- Refer to the external equipment's manual for operating instructions.
- If you connect a gaming device to the TV, use the cable supplied with the gaming device.
- In PC mode, there may be noise associated with the resolution, vertical pattern, contrast or brightness. If noise is present, change the PC output to another resolution, change the refresh rate to another rate or adjust the brightness and contrast on the PICTURE menu until the picture is clear.
- In PC mode, some resolution settings may not work properly depending on the graphics card.

Antenna connection

Connect the TV to a wall antenna socket with an RF cable (75 Ω).

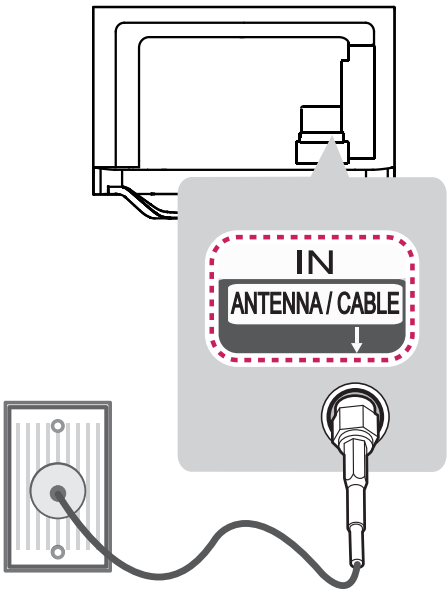

NOTE

- Use a signal splitter to use more than 2 TVs.
- If the image quality is poor, install a signal amplifier properly to improve the image quality.
- If the image quality is poor with an antenna connected, try to realign the antenna in the correct direction.
- An antenna cable and converter are not supplied.
- Supported DTV Audio: MPEG, Dolby Digital, Dolby Digital Plus, HE-AAC

ENGLISH

HDMI connection

Transmits the digital video and audio signals from an external device to the TV. Connect the external device and the TV with the HDMI cable as shown.

Choose any HDMI input port to connect. It does not matter which port you use.

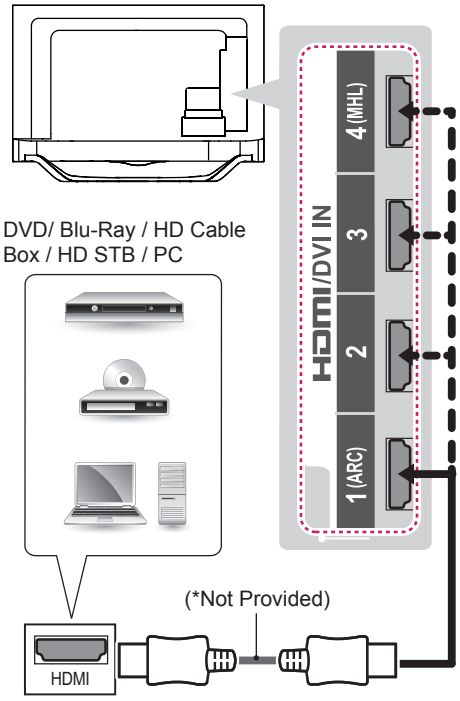

NOTE

- It is recommended to use the TV with the HDMI connection for the best image quality.
- Use the latest High Speed HDMI™ Cable with CEC (Customer Electronics Control) function.
- High Speed HDMI™ Cables are tested to carry an HD signal up to 1080p and higher.
- Supported HDMI Audio format : Dolby Digital, DTS, PCM (Up to 192 KHz, 32 KHz/44.1 KHz/48 KHz/88 KHz/96 KHz/176 KHz/192 KHz).

ARC (Audio Return Channel)

- An external audio device that supports SIMPLINK and ARC must be connected using HDMI/DVI IN 1 (ARC) port.
- When connected with a high-speed HDMI cable, the external audio device that supports ARC outputs optical SPDIF without additional optical audio cable and supports the SIMPLINK function.

DVI to HDMI connection

Transmits the digital video signal from an external device to the TV. Connect the external device and the TV with the DVI-HDMI cable as shown. To transmit an audio signal, connect an audio cable.

Choose any HDMI input port to connect. It does not matter which port you use.

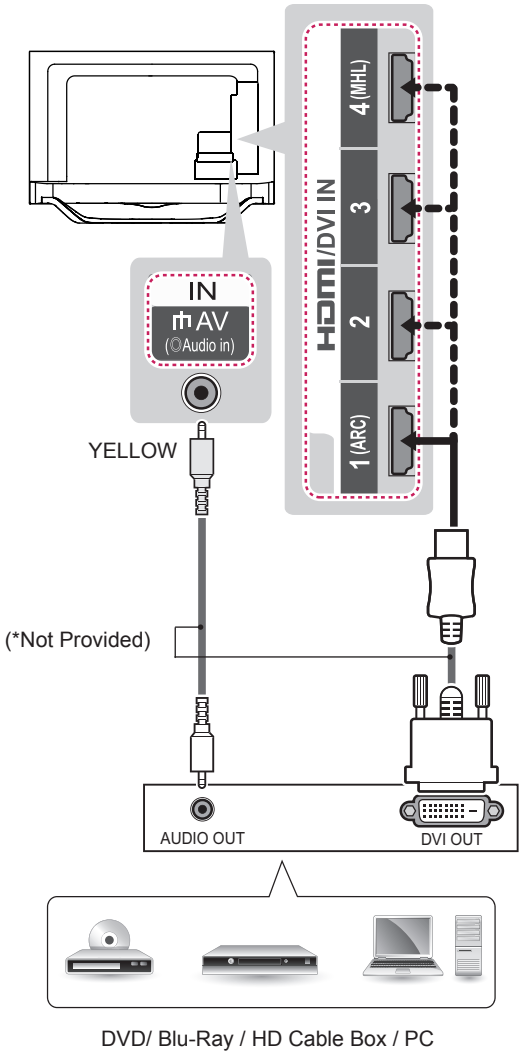

NOTE

- Depending on the graphics card, DOS mode may not work if a HDMI to DVI Cable is in use.
- When using the HDMI/DVI cable, Single link is only supported.

Component connection

Transmits analog video and audio signals from an external device to the TV. Connect the external device and the TV with a component gender cable as shown.

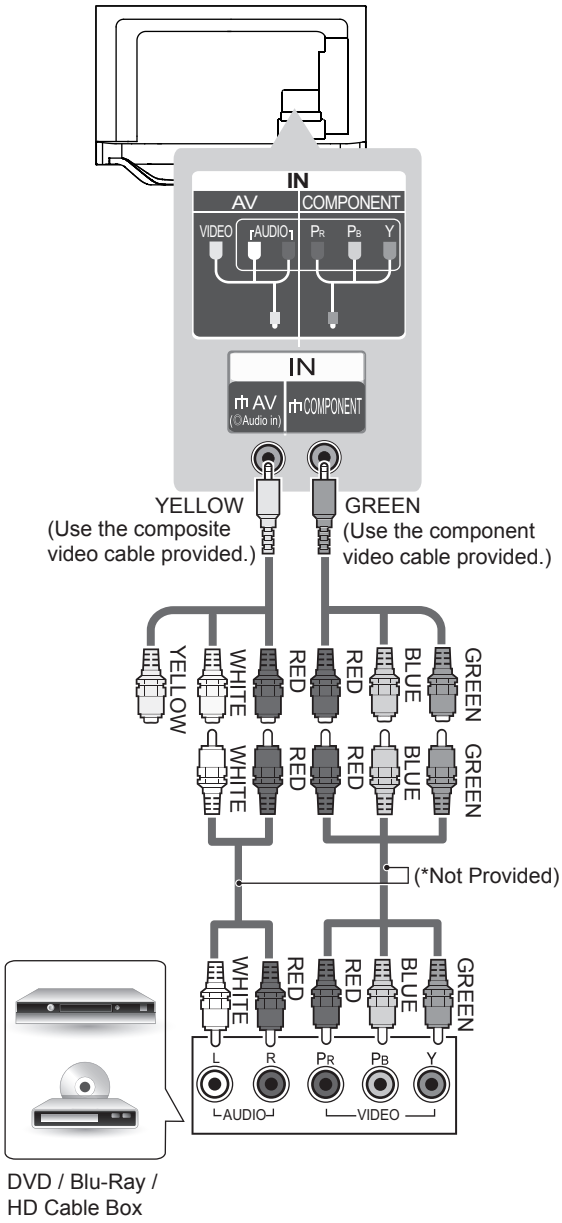

NOTE

- If cables are not installed correctly, it could cause this image to display in black and white or with distorted colours.

Composite connection

Transmits analog video and audio signals from an external device to the TV. Connect the external device and the TV with the composite gender cable as shown.

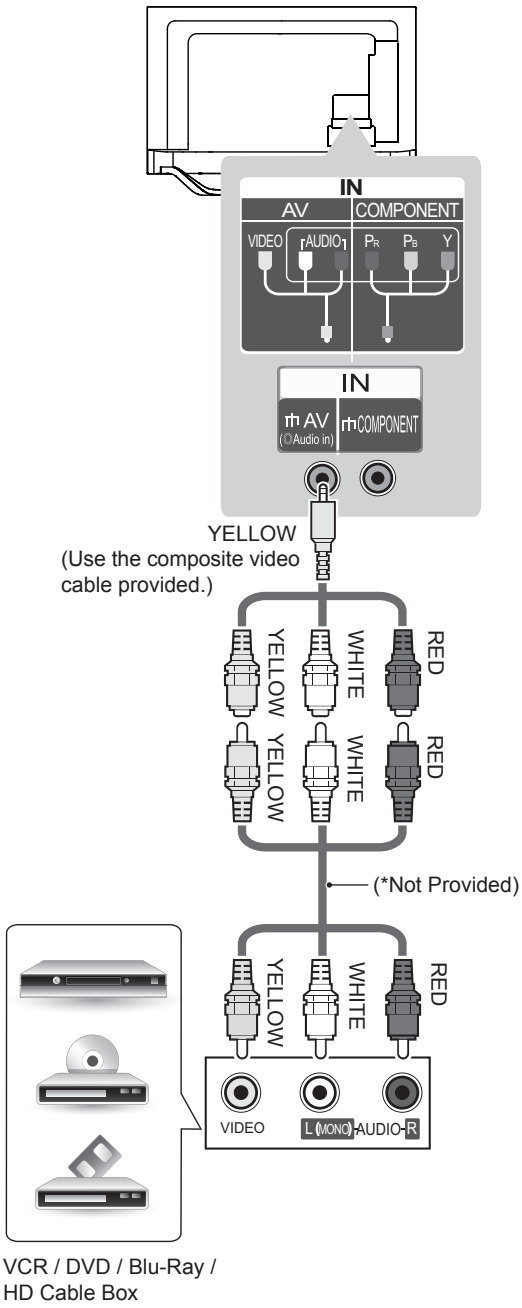

Audio connection

You may use an optional external audio system instead of the built-in speaker.

Digital optical audio connection

Transmits a digital audio signal from the TV to an external device. Connect the external device and the TV with the optical audio cable as shown.

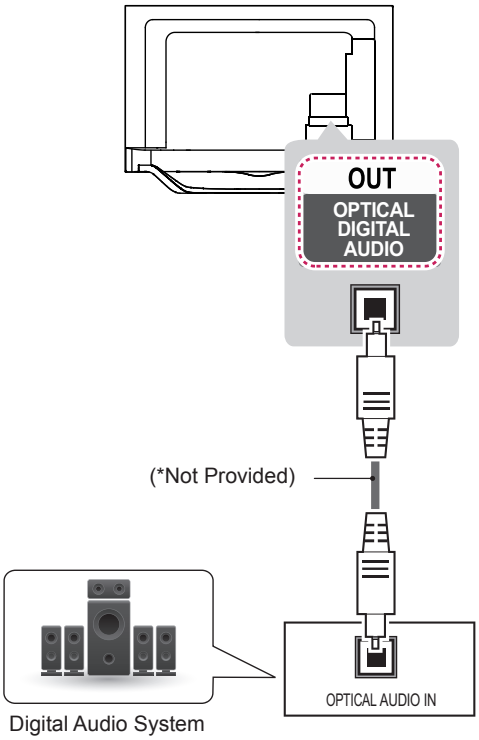

NOTE

- Do not look into the optical output port. Looking at the laser beam may damage your vision.
- Audio with ACP (Audio Copy Protection) function may block digital audio output.

Headphone connection

Transmits the headphone signal from the TV to an external device. Connect the external device and the TV with the headphone as shown on the following illustration.

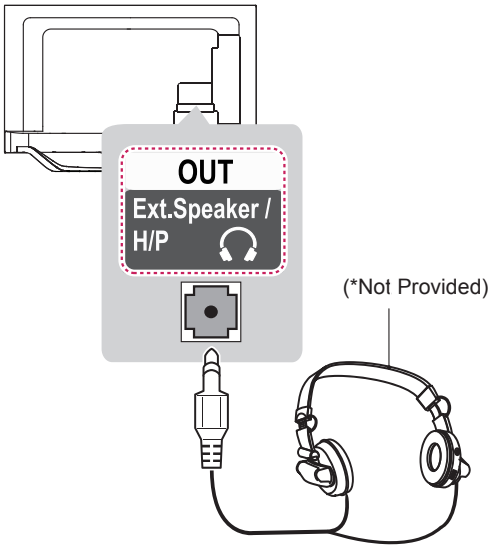

NOTE

- AUDIO menu items are disabled when connecting a headphone.
- When changing AV MODE with a headphone connected, the change is applied to video but not to audio.
- Optical Digital Audio Out is not available when connecting a headphone.
- Headphone impedance: 16 Ω
- Max audio output of headphone: 0.624 mW to 1.04 mW
- Headphone jack size: 0.35 cm

USB connection

Connect a USB storage device such as a USB flash memory, external hard drive, or a USB memory card reader to the TV and access the Smart Share menu to use various multimedia files.

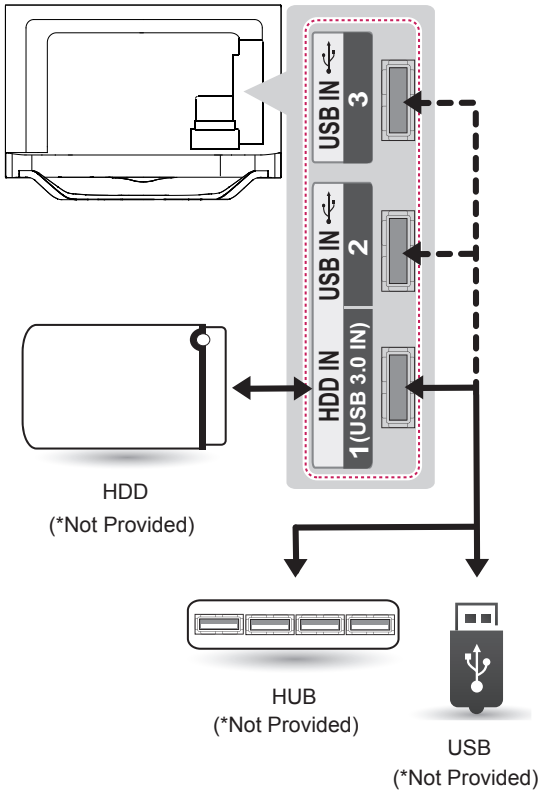

NOTE

- Some USB Hubs may not work. If a USB device connected using a USB Hub is not detected, connect it to the USB port on the TV directly.
- Connect the external power source if your USB is needed.

MHL connection

Mobile High-definition Link (MHL) is an interface for transmitting digital audiovisual signals from mobile phones to television sets.

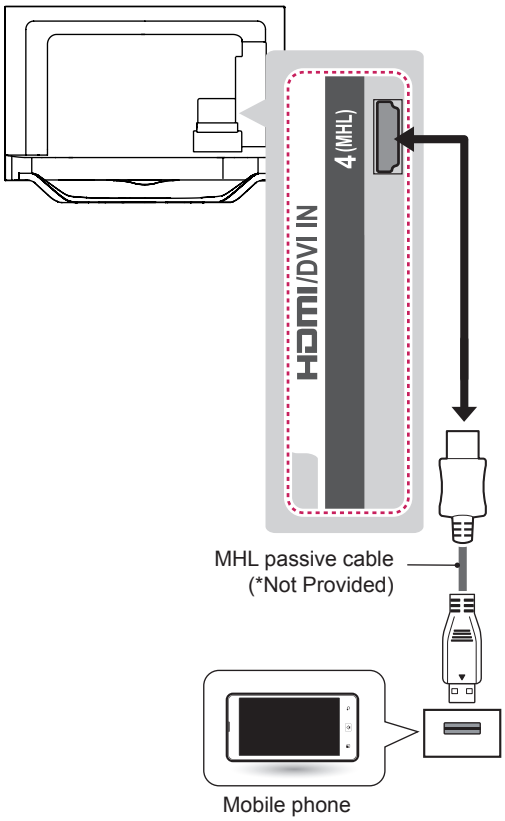

NOTE

- Connect the mobile phone to the HDMI/DVI IN 4 (MHL) port to view the phone screen on the TV.
- The MHL passive cable is needed to connect the TV and a mobile phone.
- This only works for the MHL-enabled phone.
- Some applications can be operated by the remote control.
- For some mobile phones supporting MHL, you can control with the magic remote control.
- Remove the MHL passive cable from the TV when:
  - » the MHL function is disabled
  - » your mobile device is fully charged in standby mode

ENGLISH

REMOTE CONTROL

(Depending on model)
The descriptions in this manual are based on the buttons on the remote control.
Please read this manual carefully and use the TV correctly.
To replace batteries, open the battery cover, replace batteries (1.5 V AAA) matching the ⊕ and ⊖ ends to the label inside the compartment, and close the battery cover.
To remove the batteries, perform the installation actions in reverse.

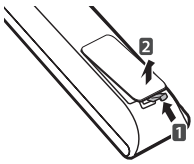

CAUTION

- Do not mix old and new batteries, as this may damage the remote control.
- In Analogue TV and some countries, some remote control buttons may not work.

Make sure to point the remote control toward the remote control sensor on the TV.

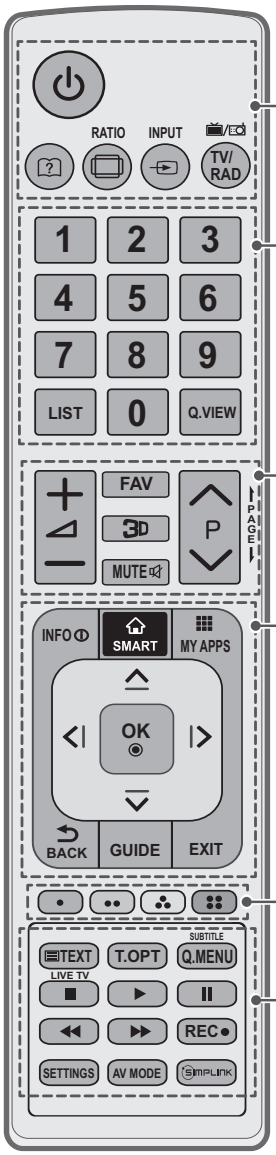

(POWER) Turns the TV on or off.
(User Guide) Sees user- guide.
RATIO Resizes an image.
INPUT Changes the input source.
TV/RAD Selects Radio, TV and DTV programme.

Number buttons Enters numbers.
LIST Accesses the saved programme list.
Q.VIEW Returns to the previously viewed programme.

+ ◿ − Adjusts the volume level.
FAV Accesses your favourite programme list.
3D Used for viewing 3D video.
MUTE Mutes all sounds.
∧P∨ Scrolls through the saved programmes.
PAGE Moves to the previous or next screen.

INFO Views the information of the current programme and screen.
SMART Accesses the Smart Home menus.
MY APPS Shows the list of Apps.
Navigation buttons (up/down/left/right) Scrolls through menus or options.
OK Selects menus or options and confirms your input.
BACK Returns to the previous level.
GUIDE Shows programme guide.
EXIT Clears on-screen displays and return to TV viewing.

Colour buttons These access special functions in some menus.
(: Red, : Green, : Yellow, : Blue)

TELETEXT BUTTONS (TEXT, T.OPT) These buttons are used for teletext.
SUBTITLE Recalls your preferred subtitle in digital mode.
Q. MENU Accesses the quick menus.
LIVE TV Return to LIVE TV.
Control buttons (■, ▶, II, ◀◀, ▶▶) Controls the Premium contents, Time Machine II or Smart Share menus or the SIMPLINK compatible devices (USB or SIMPLINK or Time Machine II).
REC ● Start to record and display record menu.
SETTINGS Accesses the main menus.
AV MODE Selects an AV mode.
SIMPLINK Accesses the AV devices connected with the HDMI cable through HDMI-CEC. Opens the SIMPLINK menu.

MAGIC REMOTE CONTROL FUNCTIONS

This item is not included for all models.

When the message “Magic Remote Control battery is low. Change the battery.” is displayed, replace the battery.
To replace batteries, open the battery cover, replace batteries (1.5 V AA) matching ⊕ and ⊖ ends to the label inside the compartment, and close the battery cover. Be sure to point the remote control toward the remote control sensor on the TV.
To remove the batteries, perform the installation actions in reverse.

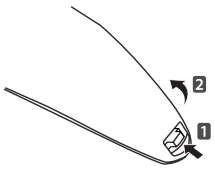

CAUTION

- Do not mix old and new batteries, as this may damage the remote control.
- In Analogue TV and some countries, some remote control buttons may not work.

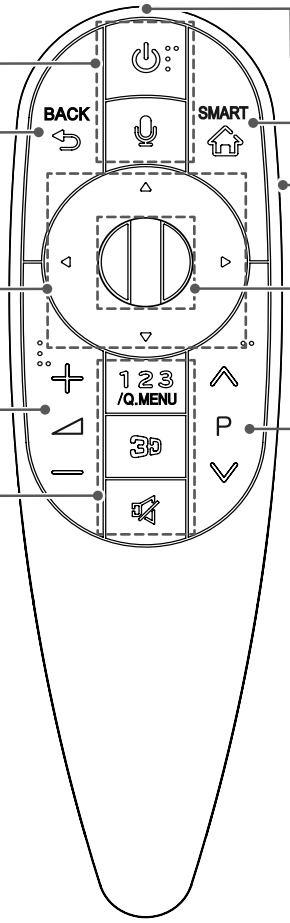

⏻ (POWER)
Turns the TV on or off.

Voice recognition
(Depending on model)

BACK
Returns to the previous level.

Navigation buttons
(up/down/left/right)
Scrolls through menus or options.

+⊿−
Adjusts the volume level.

123 /Q.MENU
Accesses the quick menus.
Accesses the Screen Remote including number button and colour button.

3D
Used for viewing 3D video.

MUTE
Mutes all sounds.

Pointer (RF transmitter)

SMART
Accesses the Smart Home menu.

Lighting on/off
Turns the light on and off.
If you set it to ON, the light automatically turns off in 5 seconds.

Wheel(OK)
Selects menus or options and confirms your input. Scrolls through the saved programmes.
If you press the navigation button while moving the pointer on the screen, the pointer disappears, and the magic remote control works as a regular remote control. To display the pointer again, shake the magic remote control from side to side.

∧P∨
Scrolls through the saved programmes or channels.

Voice recognition (Depending on model)
Network connection is required to use the voice recognition function.
The recognition rate may vary depending on the user’s characteristics (voice, pronunciation, intonation and speed) and the environment (noise and TV volume).

1 Press the Voice recognition button.
2 Speak when the voice display window appears on the left of the TV screen.
- The voice recognition may fail when you speak too fast or too slow.
- Use the Magic remote control no further than 10 cm from your face.

ENGLISH

Registering Magic Remote Control

It is necessary to ‘pair’ (register) the magic remote control to your TV before it will work.

How to register the Magic Remote Control

	1 To register automatically, turn the TV on and press the **Wheel(OK)** button. When registration is completed, the completion message appears on the screen. 2 If registration fails, turn the TV off and back on, then press the **Wheel(OK)** button to complete registration.

How to re-register the Magic Remote Control

BACK ⮌ **SMART** ⌂	1 Press and hold the **BACK**⮌ and **SMART**⌂ buttons together for 5 seconds to reset, then register it by following “How to register the Magic Remote Control” above. 2 To re-register the Magic Remote Control, press and hold the **BACK**⮌ button for 5 seconds toward the TV. When registration is completed, the completion message appears on the screen.

How to use Magic Remote Control

	1 If the pointer disappears, move the Magic Remote Control slightly to left or right. Then, it will automatically appear on the screen. » If the pointer has not been used for a certain period of time, it will disappear. 2 You can move the pointer by aiming the Pointer Receiver of the Magic Remote Control at your TV then move it left, right, up or down. » If the pointer does not work properly, leave the Magic Remote Control for 10 seconds then use it again.

1	If you press **Wheel(OK)** on the Magic Remote Control, the following screen appears. Shows information about the current programme and screen.
2	You can select More Menu.

Precautions to Take when Using the Magic Remote Control

- Use the Magic Remote Control within the maximum communication distance (10 m). Using the Magic Remote Control beyond this distance, or with an object obstructing it, may cause a communication failure.
- A communication failure may occur due to nearby devices. Electrical devices such as a microwave oven or wireless LAN product may cause interference, as these use the same bandwidth (2.4 GHz) as the Magic Remote Control.
- The Magic Remote Control may be damaged or may malfunction if it is dropped or receives a heavy impact.
- Take care not to bump into nearby furniture or other people when using the Magic Remote Control.
- Manufacturer and installer cannot provide service related to human safety as the applicable wireless device has possibility of electric wave interference.
- It is recommended that an Access Point (AP) be located more than 1 m away from the TV. If the AP is installed closer than 1 m, the Magic Remote Control may not perform as expected due to frequency interference.

ENGLISH

USING THE USER GUIDE

User Guide allows you to more easily access the detailed TV information.

1 Press the **SMART** button to access the Smart Home menu.
2 Select **User Guide** and press **Wheel(OK)**.

User Guide

NOTE

- You can also access the User Guide by pressing (**User Guide**) in the remote control.

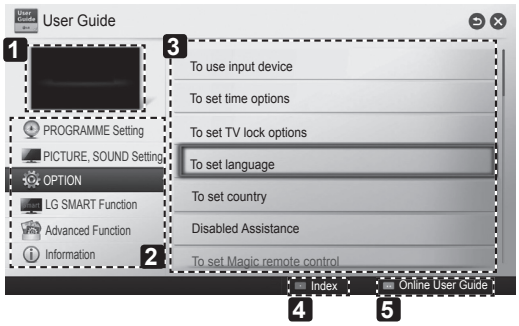

1 Shows the current watching programme or input source screen.

2 Allows to select the category you want.

3 Allows to select the item you want.
You can use ∧/∨(Navigation buttons) to move between pages.

4 Allows to browse the description of the function you want from the index.

5 Provides the detailed information on the functions of LG Smart TV when the Internet is connected. (It may not be available depending on the country/ language.)

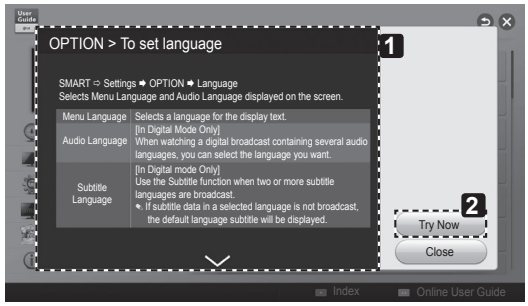

1 Shows the description of the selected menu.
You can use ∧/∨(Navigation buttons) to move between pages.

2 Moves to the selected menu directly from the User Guide.

ENGLISH

MAINTENANCE

Cleaning your TV

Clean your TV regularly to keep the best performance and to extend the product lifespan.

CAUTION

- Make sure to turn the power off and disconnect the power cord and all other cables first.
- When the TV is left unattended and unused for a long time, disconnect the power cord from the wall outlet to prevent possible damage from lightning or power surges.

Screen, frame, cabinet and stand

- To remove dust or light dirt, wipe the surface with a dry, clean, and soft cloth.
- To remove major dirt, wipe the surface with a soft cloth dampened in clean water or a diluted mild detergent. Then wipe immediately with a dry cloth.

CAUTION

- Avoid touching the screen at all times, as this may result in damage to the screen.
- Do not push, rub, or hit the screen surface with your fingernail or a sharp object, as this may result in scratches and image distortions.
- Do not use any chemicals as this may damage the product.
- Do not spray liquid onto the surface. If water enters the TV, it may result in fire, electric shock, or malfunction.

Power cord

Remove the accumulated dust or dirt on the power cord regularly.

TROUBLESHOOTING

Problem	Solution
Cannot control the TV with the remote control.	• Check the remote control sensor on the product and try again. • Check if there is any obstacle between the product and the remote control. • Check if the batteries are still working and properly installed (⊕ to ⊕, ⊖ to ⊖).
No image display and no sound is produced.	• Check if the product is turned on. • Check if the power cord is connected to a wall outlet. • Check if there is a problem in the wall outlet by connecting other products.
The TV turns off suddenly.	• Check the power control settings. The power supply may be interrupted. • Check if the Auto sleep feature is activated in the Time settings. • If there is no signal while the TV is on, the TV will turn off automatically after 15 minutes of inactivity.
When connecting to the PC (HDMI DVI), ‘No signal’ or ‘Invalid Format’ is displayed.	• Turn the TV off/on using the remote control. • Reconnect the HDMI cable. • Restart the PC with the TV on.

ENVIRONMENTAL INFORMATION

(India only)

WEEE

Disposal of your old appliance

1. When this crossed-out wheeled bin symbol is attached to a product it means the product is covered by the e-waste (Management and Handling) Rules, 2011.
2. All electrical and electronic products should be disposed of separately from the municipal waste stream via designated collection facilities appointed by the government or the local authorities.
3. The correct disposal of your old appliance will help prevent potential negative consequences for the environment and human health.
4. For more detailed information about disposal of your old appliance, please contact your city office, waste disposal service or the shop where you purchased the product.
5. This product does not contain any of the hazardous substances as specified in the rule 13 (1) and (2) of the e-waste (Management and Handling) Rules, 2011.

पर्यावरणीय जानकारी

WEEE

अपने पुराने उपकरण का निपटान

१. जब यह काटे गये पहिये वाले बिन का चिह्न किसी उत्पाद के साथ संलग्न होता है तो इसका अर्थ है उत्पाद ई–अपशिष्ट (प्रबंधन और हथालन) नियम २०११ के अंतर्गत सम्मिलित किया गया है।

२. सभी इलेक्ट्रिकल एवं और इलेक्ट्रानिक उत्पादों को सरकार या स्थानीय अधिकारियों द्वारा नियुक्त नगरपालिका अपशिष्ट धारा से अलग प्राधिकृत की गई संग्रह सुविधाओं के माध्यम से निपटाया जाना चाहिए।

३. सही तरीके से अपने पुराने उपकरणों का निपटान वातावरण और मानवीय स्वास्थ्य के लिए संभावित नकारात्मक परिणामों को रोकने में मदद करेगा।

४. अपने पुराने उपकरणों के निपटान के संबध में और अधिक विसतृत जानकारी के लिए, कृपया अपने नगर कार्यालय, अपशिष्ट निपटान सेवा या जहां से आपने उत्पाद खरीदा था, वहां संपर्क करें।

५. इस उत्पाद में ई–अपशिष्ट(प्रबंधन और हथालन) नियम, २०११ के नियम १३ (१) और (२) में निर्देशानुसार कोई भी हानिकारक पदार्थ भामिल नहीं है।

ENGLISH

SPECIFICATIONS

Wireless LAN module(TWFM-B006D) specification	
Standard	IEEE802.11a/b/g/n
Frequency Range	2400 to 2483.5 MHz 5150 to 5250 MHz 5725 to 5850 MHz (for Non EU)
Output Power (Max.)	802.11a: 11 dBm 802.11b: 14 dBm 802.11g: 10.5 dBm 802.11n - 2.4GHz: 11 dBm 802.11n - 5GHz: 12.5 dBm
Bluetooth module (BM-LDS401) specification	
Standard	Bluetooth Version 3.0
Frequency Range	2400 ~ 2483.5 MHz
Output Power (Max.)	10 dBm or lower

- Because band channel used by the country could be different, the user can not change or adjust the operating frequency and this product is set for the regional frequency table.

CE 0197

Product specifications may be changed without prior notice due to upgrade of product functions.
For the power supply and power consumption, refer to the label attached to the product.

MODELS		47LA79**	55LA79**
		47LA7900-TA 47LA790Y-TA	55LA7900-TA 55LA790Y-TA
Dimensions (W x H x D)	With stand (mm)	1077.0 x 690.0 x 285.0	1247.0 x 789.0 x 326.0
	Without stand(mm)	1077.0 x 625.0 x 34.1	1247.0 x 722.0 x 34.1
Weight	With stand (kg)	18.5	25.3
	Without stand (kg)	16.8	23.0
Power requirement		AC 100-240 V~ 50 / 60 Hz	AC 100-240 V~ 50 / 60 Hz

MODELS		42LA86**	47LA86**	55LA86**
		42LA8600-TA 42LA860Y-TA	47LA8600-TA 47LA860Y-TA	55LA8600-TA 55LA860Y-TA
Dimensions (W x H x D)	With stand (mm)	948.0 x 631.0 x 269.0	1059.0 x 694.0 x 269.0	1229.0 x 788.0 x 316.0
	Without stand(mm)	948.0 x 562.0 x 35.1	1059.0 x 625.0 x 35.1	1229.0 x 721.0 x 35.1
Weight	With stand (kg)	15.6	19.3	26.2
	Without stand (kg)	13.5	17.2	23.4
Power requirement		AC 100-240 V~ 50 / 60 Hz	AC 100-240 V~ 50 / 60 Hz	AC 100-240 V~ 50 / 60 Hz

MODELS		60LA86**	70LA86**
		60LA8600-TA 60LA860Y-TA	70LA8600-TA 70LA860Y-TA
Dimensions (W x H x D)	With stand (mm)	1338.0 x 850.0 x 316.0	1581.6 x 997.0 x 401.3
	Without stand(mm)	1338.0 x 782.0 x 35.1	1581.6 x 922.4 x 37.8
Weight	With stand (kg)	30.5	45.0
	Without stand (kg)	27.7	41.1
Power requirement		AC 100-240 V~ 50 / 60 Hz	AC 100-240 V~ 50 / 60 Hz

MODELS		47LA96**	55LA96**	84LA98**
		47LA9600-TA 47LA960Y-TA	55LA9600-TA 55LA960Y-TA	84LA9800-TA 84LA980Y-TA
Dimensions (W x H x D)	With stand (mm)	1050.0 x 684.0 x 266.0	1220.0 x 781.0 x 305.0	1916.0 x 1214.0 x 399.0
	Without stand(mm)	1050.0 x 616.0 x 31.2	1220.0 x 712.0 x 31.5	1916.0 x 1120.0 x 39.9
Weight	With stand (kg)	15.5	21.0	81.7
	Without stand (kg)	13.6	18.4	70.4
Power requirement		AC 100-240 V~ 50 / 60 Hz	AC 100-240 V~ 50 / 60 Hz	AC 100-240 V~ 50 / 60 Hz

Environment condition	Operating Temperature	0 °C to 40 °C
	Operating Humidity	Less than 80 %
	Storage Temperature	-20 °C to 60 °C
	Storage Humidity	Less than 85 %

		Digital TV	Analogue TV
New Zealand, Singapore	Television System	DVB-T	PAL/SECAM-B/G/D/K, PAL-I
	Programme Coverage	UHF 21 to 69	BG : VHF/UHF 1 to 69, CATV 01 to 47 I : VHF/UHF 1 to 69, CATV 01 to 47 DK : VHF/UHF 1 to 69, CATV 01 to 47
Australia	Television System	DVB-T	PAL B/B
	Programme Coverage	VHF 06 to 12, UHF 27 to 69	B/B : VHF/UHF 0 to 75, CATV : 2 to 44
Indonesia, Israel, Myanmar, Sri Lanka	Television System	DVB-T	PAL/SECAM-B/G/D/K, PAL-I, NTSC-M
	Programme Coverage	UHF 21 to 69	BG : VHF/UHF 1 to 69, CATV 01 to 47 I : VHF/UHF 1 to 69, CATV 01 to 47 DK : VHF/UHF 1 to 69, CATV 01 to 47 M : VHF/UHF 2 to 78, CATV 01 to 71
Vietnam, Malaysia	Television System	DVB-T	PAL/SECAM-B/G/D/K, PAL-I, NTSC-M
	Programme Coverage	VHF 6 to 12, UHF 21 to 69	BG : VHF/UHF 1 to 69, CATV 01 to 47 I : VHF/UHF 1 to 69, CATV 01 to 47 DK : VHF/UHF 1 to 69, CATV 01 to 47 M : VHF/UHF 2 to 78, CATV 01 to 71
Iran, Algeria, Tunisia, Digital model	Television System	DVB-T	PAL/SECAM-B/G/D/K, PAL-I, NTSC-M
	Programme Coverage	VHF 5 to 12, UHF 21 to 69	BG : VHF/UHF 1 to 69, CATV 01 to 47 I : VHF/UHF 1 to 69, CATV 01 to 47 DK : VHF/UHF 1 to 69, CATV 01 to 47 M : VHF/UHF 2 to 78, CATV 01 to 71
Analogue model, India, Thailand, South Africa --	Television System	-	PAL/SECAM-B/G/D/K, PAL-I, NTSC-M
	Programme Coverage	-	BG : VHF/UHF 1 to 69, CATV 01 to 47 I : VHF/UHF 1 to 69, CATV 01 to 47 DK : VHF/UHF 1 to 69, CATV 01 to 47 M : VHF/UHF 2 to 78, CATV 01 to 71
	External Antenna Impedance	75 Ω	75 Ω

HDMI/DVI-DTV supported mode

Resolution	Horizontal Frequency (kHz)	Vertical Frequency (Hz)
640x480	31.469 31.5	59.94 60
720x480	31.469 31.5	59.94 60
720x576	31.25	50
1280x720	37.5 44.96 45	50 59.94 60
1920x1080	33.72 33.75 28.125 26.97 27 33.716 33.75 56.25 67.43 67.5	59.94 60 50 23.97 24 29.976 30.00 50 59.94 60

HDMI/DVI-PC supported mode

Resolution	Horizontal Frequency (kHz)	Vertical Frequency (Hz)
640x350	31.468	70.09
720x400	31.469	70.08
640x480	31.469	59.94
800x600	37.879	60.31
1024x768	48.363	60.00
1152x864	54.348	60.053
1360x768	47.712	60.015
1280x1024	63.981	60.020
1920x1080	67.50	60.00

Component port connecting information

Component ports on the TV	Y	P_B	P_R

Video output ports on DVD player	Y	P_B	P_R
	Y	B-Y	R-Y
	Y	Cb	Cr
	Y	Pb	Pr

Signal	Component
480i/576i	O
480p/576p	O
720p/1080i	O
1080p	O (50 Hz / 60 Hz only)

3D supported mode

- Video, which is input as below media contents is switched into the 3D screen automatically.

3D supported mode automatically				
Input	Signal	Horizontal Frequency (kHz)	Vertical Frequency (Hz)	Playable 3D video format
HDMI	640 X 480	31.469 / 31.5	59.94 / 60	Top & Bottom, Side by Side(Half), Side by Side(Full)
		62.938 / 63		Frame Packing, Line Alternative
	480p	31.469 / 31.5		Top & Bottom, Side by Side(Half), Side by Side(Full)
		62.938 / 63		Frame Packing, Line Alternative
	576p	31.25	50	Top & Bottom, Side by Side(Half), Side by Side(Full)
		62.5		Frame Packing, Line Alternative
	720p	37.50	50	Top & Bottom, Side by Side(Half), Side by Side(Full)
		44.96 / 45	59.94 / 60	
		75	50	Frame Packing, Line Alternative
		89.91 / 90	59.94 / 60	
	1080i	28.125	50	Top & Bottom, Side by Side(Half), Side by Side(Full)
		33.72 / 33.75	59.94 / 60	
		56.25	50	Frame Packing, Field Alternative
		67.432 / 67.5	59.94 / 60	
	1080p	26.97 / 27	23.97 / 24	Top & Bottom, Side by Side(Half), Side by Side(Full)
		28.125	25	
		33.716 / 33.75	29.976 / 30	
		43.94 / 54	23.97 / 24	Frame Packing, Line Alternative
		56.25	25	
		67.432 / 67.5	29.976 / 30	
		56.25	50	Top & Bottom, Side by Side(Half)
		67.432 / 67.5	59.94 / 60	
USB	1080p	33.75	30	Side by Side(Half), Top & Bottom, Checker Board, MPO(Photo), JPS(Photo)
DLNA	1080p	33.75	30	

3D supported mode manually				
Input	Signal			Playable 3D video format
	Resolution	Horizontal Frequency (kHz)	Verticla Frequency (Hz)	
DTV	HD / SD	-	-	2D to 3D, Side by Side(Half), Top & Bottom
ATV(CVBS)	SD	-	-	
Component	HD / SD	-	-	
HDMI-PC	1024X768	48.36	60	
	1360X768	47.71		
	1920X1080	67.5		2D to 3D, Side by Side(Half), Top & Bottom, Checker Board, Frame Sequential, Row Interleaving, Column Interleaving
	Others	-	-	2D to 3D, Side by Side(Half), Top & Bottom
HDMI-DTV	480P	31.5	60	2D to 3D, Side by Side(Half), Top & Bottom, Checker Board, Frame Sequential, Row Interleaving, Column Interleaving
	576P	31.25	50	
	720p	37.5	50	
		45	60	
	1080i	28.12	50	2D to 3D, Side by Sied(Half), Top & Bottom
		33.75	60	
	1080p	27	24	2D to 3D, Side by Side(Half), Top & Bottom,Checker Board, Row Interleaving, Column Interleaving
		28.12	25	
		33.75	30	
		56.25	50	2D to 3D, Side by Side(Half), Top & Bottom, Checker Board, Frame Sequential, Row Interleaving, Column Interleaving
		67.5	60	
USB ,DLNA (Movie)	Under 704x480	-	-	2D to 3D
	Over 704x480 interlaced	-	-	2D to 3D, Side by Side(Half), Top & Bottom
	Over 704x480 progressive	-	50 / 60	2D to 3D, Side by Side(Half), Top & Bottom,Checker Board, Frame Sequential, Row Interleaving, Column Interleaving
	Over 704x480 progressive	-	others	2D to 3D, Side by Side(Half), Top & Bottom,Checker Board, Row Interleaving, Column Interleaving
USB, DLNA (Photo)	Under 320x240	-	-	2D to 3D
	Over 320x240	-	-	2D to 3D, Side by Side(Half), Top & Bottom
Miracast/Widi	1024X768p	-	30 / 60	2D to 3D, Side by Side(Half), Top & Bottom
	1280x720p	-	30 / 60	
	1920X1080p	-	30 / 60	
	Others	-	-	2D to 3D

ENGLISH

LICENSES

Supported licenses may differ by model. For more information about licenses, visit *www.lg.com*.

Manufactured under license from Dolby Laboratories. “Dolby” and the double-D symbol are trademarks of Dolby Laboratories.

The terms HDMI and HDMI High-Definition Multimedia interface, and the HDMI logo are trademarks or registered trademarks of HDMI Licensing LLC in the United States and other countries.

ABOUT DIVX VIDEO: DivX® is a digital video format created by DivX, LLC, a subsidiary of Rovi Corporation. This is an official DivX Certified® device that plays DivX video. Visit *divx.com* for more information and software tools to convert your files into DivX video.

ABOUT DIVX VIDEO-ON-DEMAND: This DivX Certified® device must be registered in order to play purchased DivX Video-on-Demand (VOD) movies. To obtain your registration code, locate the DivX VOD section in your device setup menu. Go to vod.divx.com for more information on how to complete your registration.

“DivX Certified® to play DivX® video up to HD 1080p, including premium content.”

“DivX®, DivX Certified® and associated logos are trademarks of Rovi Corporation or its subsidiaries and are used under license.”

“Covered by one or more of the following U.S. patents :
7,295,673; 7,460,668; 7,515,710; 7,519,274”

Manufactured under license under U.S. Patent Nos: 5,956,674; 5,974,380; 6,487,535 & other U.S. and worldwide patents issued & pending. DTS, the Symbol & DTS and the Symbol together are registered trademarks & DTS 2.0+Digital Out is a trademark of DTS, Inc. Product includes software. © DTS, Inc. All Rights Reserved.

OPEN SOURCE SOFTWARE NOTICE

To obtain the source code under GPL, LGPL, MPL and other open source licenses, that is contained in this product, please visit http://opensource.lge.com .
In addition to the source code, all referred license terms, warranty disclaimers and copyright notices are available for download.
LG Electronics will also provide open source code to you on CD-ROM for a charge covering the cost of performing such distribution (such as the cost of media, shipping and handling) upon email request to opensource@lge.com. This offer is valid for three (3) years from the date on which you purchased the product.

EXTERNAL CONTROL DEVICE SETUP

To obtain the external control device setup information, please visit www.lg.com

Record the model number and serial number of the TV.
Refer to the label on the back cover and quote this information to your dealer when requiring any service.

MODEL _____

SERIAL _____

(Only DTV)

Digital Video Broadcasting

LG
Life's Good

OWNER'S MANUAL

EXTERNAL CONTROL DEVICE SETUP

Please read this manual carefully before operating the set and retain it for future reference.

www.lg.com

ENGLISH

KEY CODES

- This feature is not available for all models.

Code (Hexa)	Function	Note	Code (Hexa)	Function	Note
00	CH +, PR +	R/C Button	45	Q.Menu	R/C Button
01	CH -, PR -	R/C Button	4C	List, - (ATSC Only)	R/C Button
02	Volume +	R/C Button	53	List	R/C Button
03	Volume -	R/C Button	5B	Exit	R/C Button
06	> (Arrow Key / Right Key)	R/C Button	61	Blue	R/C Button
07	< (Arrow Key / Left Key)	R/C Button	63	Yellow	R/C Button
08	Power	R/C Button	71	Green	R/C Button
09	Mute	R/C Button	72	Red	R/C Button
0B	Input	R/C Button	79	Ratio / Aspect Ratio	R/C Button
0E	SLEEP	R/C Button	91	AD (Audio Description)	R/C Button
0F	TV, TV/RAD	R/C Button	7A	User Guide	R/C Button
10 - 19	* Number Key 0 - 9	R/C Button	7C	Smart/ Home	R/C Button
1A	Q.View / Flashback	R/C Button	7E	Simplink	R/C Button
1E	FAV (Favorite Channel)	R/C Button	8E	►► (Forward)	R/C Button
20	Text (Teletext)	R/C Button	8F	◄◄ (Rewind)	R/C Button
21	T. Opt (Teletext Option)	R/C Button	AA	Info	R/C Button
28	Return (BACK)	R/C Button	AB	Program Guide	R/C Button
30	AV (Audio/ Video) Mode	R/C Button	B0	► (Play)	R/C Button
39	Caption/Subtitle	R/C Button	B1	■ (Stop/ Live TV)	R/C Button
40	Λ (Arrow Key/ Cursor Up)	R/C Button	BA	❚❚ (Freeze/Slow Play/Pause)	R/C Button
41	V (Arrow Key/ Cursor Down)	R/C Button	BD	● (REC)	R/C Button
42	My Apps	R/C Button	DC	3D	R/C Button
43	Menu / Settings	R/C Button	9F	App/ *	R/C Button
44	OK / Enter	R/C Button			

* Key code 4C (0x4C) is available on ATSC/ISDB models which use major/minor channel.
(For South Korea, Japan, North America, Latin America except Colombia models)

EXTERNAL CONTROL DEVICE SETUP

- Image shown may differ from your TV.

Connect the USB to Serial converter/RS-232C input jack to an external control device (such as a computer or an A/V control system) to control the product's functions externally.

Note: There are several ways to connect TV based on model's support port.

* Please be advised that not all models support these connectivity.

* Cable is not provided.

USB to Serial converter with USB Cable

USB Type

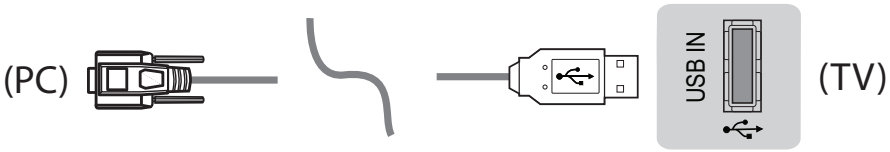

- LGTV supports PL2303 chip-based (Vendor ID : 0x0557, Product ID : 0x2008) USB to serial converter which is not made nor provided by LG.
- It can be purchased from computer stores that carry accessories for IT support professionals.

ENGLISH

RS-232C with RS-232C Cable (Legacy)

Phone jack Type

- You need to purchase the phone-jack to RS-232 cable required for the connection between the PC and the TV, which is specified in the manual.

* For other models, connect to the USB port.

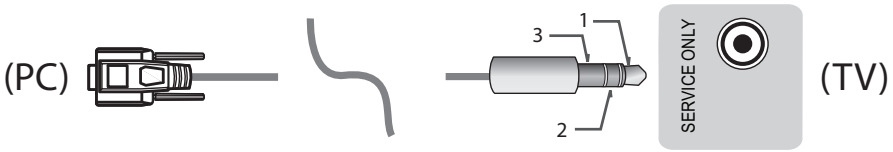

- This connection can only be used for the following models: 55/47/39LN5450-UA, 55/50/47/42LN5400-UA, 42/39/32LN5300-UA, and 37/32LN530B-UA.

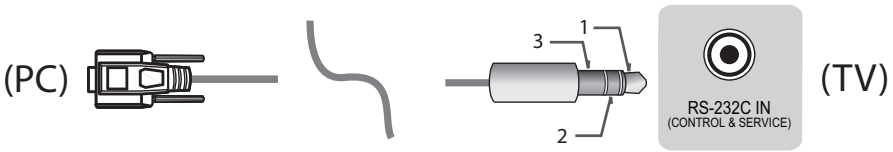

- This connection can only be used for the following models: 60PN6550-UA, 50/60PN6500-UA, 50/60PN5300-UF, and 42/50PN4500-UA.

Customer Computer

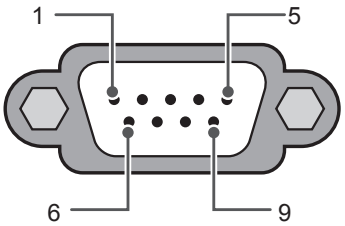

RS-232C
(Serial port)

RS-232C configurations

3-Wire Configurations(Not standard)

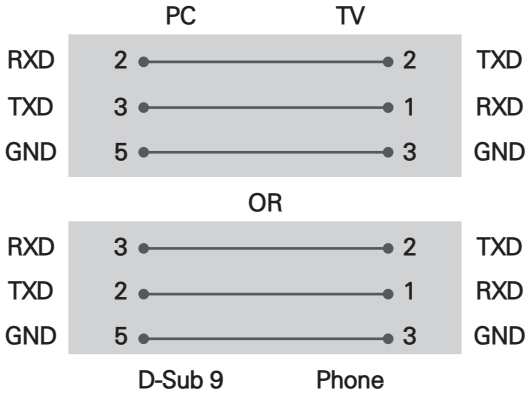

Set ID

For Set ID number, see **"Real Data Mapping"** on p. 6

1. Press **SETTINGS** to access the main menus.
2. Press the Navigation buttons to scroll to **OPTION** and press **OK**.
3. Press the Navigation buttons to scroll to **SET ID** and press **OK**.
4. Scroll left or right to select a set ID number and select **CLOSE**. The adjustment range is 1-99.
5. When you are finished, press **EXIT**.

Communication Parameters

- Baud rate : 9600 bps (UART)
- Data length : 8 bits
- Parity : None
- Stop bit : 1 bit
- Communication code : ASCII code
- Use a crossed (reverse) cable.

Command reference list

(Depending on model)

	COMMAND1	COMMAND2	DATA (Hexadecimal)		COMMAND1	COMMAND2	DATA (Hexadecimal)
01. Power off	k	a	00	13. Balance	k	t	00 to 64
02. Aspect Ratio	k	c	(See p.7)	14. Color (Colour) Temperature	x	u	00 to 64
03. Screen Mute	k	d	(See p.7)	15. ISM Method (Only Plasma TV)	j	p	(See p.8)
04. Volume Mute	k	e	00 to 01	16. Energy Saving	j	q	00 to 05
05. Volume Control	k	f	00 to 64	17. Tune Command	m	a	(See p.8)
06. Contrast	k	g	00 to 64	18. Channel (Programme) Add/Del(Skip)	m	b	00 to 01
07. Brightness	k	h	00 to 64	19. Key	m	c	Key Codes
08. Color/ Colour	k	i	00 to 64	20. Control Back Light, Control Panel Light	m	g	00 to 64
09. Tint	k	j	00 to 64	21. Input select (Main)	x	b	(See p.10)
10. Sharpness	k	k	00 to 32	22. 3D (Only 3D models)	x	t	(See p.11)
11. OSD Select	k	l	00 to 01	23. Extended 3D (Only 3D models)	x	v	(See p.11)
12. Remote Control Lock Mode	k	m	00 to 01				

* Note: During USB operations such as DivX or EMF, all commands except Power(ka) and Key(mc) are not executed and treated as NG.

Transmission / Receiving Protocol

Transmission

[Command1][Command2][ ][Set ID][ ][Data][Cr]

[Command 1] : First command to control the TV. (j, k, m or x)
[Command 2] : Second command to control the TV.
[Set ID] : You can adjust the [Set ID] to choose desired monitor ID number in option menu. Adjustment range in TV is 1 to 99. If [Set ID] value is selected to '0', every connected set can be controlled.
* [Set ID] is indicated as decimal (1 to 99) on menu and as Hexadecimal (0x00 to 0x63) on transmission/receiving protocol.
[DATA] : To transmit command data (hexadecimal). Transmit 'FF' data to read status of command.
[Cr] : Carriage Return - ASCII code '0x0D'
[ ] : Space – ASCII code '0x20'

OK Acknowledgement

[Command2][ ][Set ID][ ][OK][Data][x]

* The set transmits ACK (acknowledgement) based on this format when receiving normal data. At this time, if the data is data read mode, it indicates present status data. If the data is data write mode, it returns the data of the PC computer.

Error Acknowledgement

[Command2][ ][Set ID][ ][NG][Data][x]

* The set transmits ACK (acknowledgement) based on this format when receiving abnormal data from non-viable functions or communication errors.

Data 00: Illegal Code

Real data mapping (Hexadecimal → Decimal)

* When you enter the [data] in hexadecimal, refer to following conversion table.
* Channel Tune (ma) Command uses two-byte hexadecimal value([data]) to select channel number.

00 : Step 0	32 : Step 50 (Set ID 50)	FE : Step 254
01 : Step 1 (Set ID 1)	33 : Step 51 (Set ID 51)	FF : Step 255
...	...	...
0A : Step 10 (Set ID 10)	63 : Step 99 (Set ID 99)	01 00 : Step 256
...	...	...
0F : Step 15 (Set ID 15)	C7 : Step 199	27 0E : Step 9998
10 : Step 16 (Set ID 16)	C8 : Step 200	27 0F : Step 9999
...	...	...

* Commands may work differently depending on model and signal.

01. Power (Command: k a)

► To control Power Off of the set.

Transmission[k][a][ ][Set ID][ ][Data][Cr]

Data 00 : Power Off

Ack [a][ ][Set ID][ ][OK/NG][Data][x]

► To Show Power On. (Works TV is On Only)

Transmission [k][a][ ][Set ID][ ][FF][Cr]

Ack [a][ ][Set ID][ ][OK][01][x]

* Similarly, if other functions transmit 'FF' data based on this format, Acknowledgement feedback presents status about each function.

02. Aspect Ratio (Command: k c)
(Main Picture Size)

► To adjust the screen format. (Main picture format)
You can also adjust the screen format using the Aspect Ratio in the Q.MENU. or PICTURE menu.

Transmission [k][c][ ][Set ID][ ][Data][Cr]

Data 01 : Normal screen (4:3)
02 : Wide screen (16:9)
04 : Zoom
05 : Zoom 2 (Latin America except Colombia Only)
06 : Set by Program/ Original
07 : 14:9 (Europe, Colombia, Mid-East, Asia except South Korea and Japan)
09 : * Just Scan
0B : Full Wide (Europe, Colombia, Mid-East, Asia except South Korea and Japan)
10 to 1F : Cinema Zoom 1 to 16

Ack [c][ ][Set ID][ ][OK/NG][Data][x]

* Using the PC input, you select either 16:9 or 4:3 screen aspect ratio.
* In DTV/HDMI/Component mode (high-definition), Just Scan is available.
* Full wide mode may work differently based on model and is supported for DTV fully, and ATV, AV partially.

03. Screen Mute (Command: k d)

► To select screen mute on/off.

Transmission [k][d][ ][Set ID][ ][Data][Cr]

Data 00 : Screen mute off (Picture on) Video mute off
01 : Screen mute on (Picture off)
10 : Video mute on

Ack [d][ ][Set ID][ ][OK/NG][Data][x]

* In case of video mute on only, TV will display On Screen Display(OSD). But, in case of Screen mute on, TV will not display OSD.

04. Volume Mute (Command: k e)

► To control volume mute on/off.
You can also adjust mute using the MUTE button on remote control.

Transmission [k][e][ ][Set ID][ ][Data][Cr]

Data 00 : Volume mute on (Volume off)
01 : Volume mute off (Volume on)

Ack [e][ ][Set ID][ ][OK/NG][Data][x]

05. Volume Control (Command: k f)

► To adjust volume.
You can also adjust volume with the volume buttons on remote control.

Transmission [k][f][ ][Set ID][ ][Data][Cr]

Data Min : 00 to Max : 64

Ack [f][ ][Set ID][ ][OK/NG][Data][x]

06. Contrast (Command: k g)

► To adjust screen contrast.
You can also adjust contrast in the PICTURE menu.

Transmission [k][g][ ][Set ID][ ][Data][Cr]

Data Min : 00 to Max : 64

Ack [g][ ][Set ID][ ][OK/NG][Data][x]

07. Brightness (Command: k h)

► To adjust screen brightness.
You can also adjust brightness in the PICTURE menu.

Transmission [k][h][ ][Set ID][ ][Data][Cr]

Data Min : 00 to Max : 64

Ack [h][ ][Set ID][ ][OK/NG][Data][x]

08. Color/Colour (Command: k i)

► To adjust the screen Color(Colour).
You can also adjust colour in the PICTURE menu.

Transmission [k][i][ ][Set ID][ ][Data][Cr]

Data Min : 00 to Max : 64

Ack [i][ ][Set ID][ ][OK/NG][Data][x]

09. Tint (Command: k j)

► To adjust the screen tint.
You can also adjust tint in the PICTURE menu.

Transmission [k][j][ ][Set ID][ ][Data][Cr]

Data Red : 00 to Green : 64

Ack [j][ ][Set ID][ ][OK/NG][Data][x]

10. Sharpness (Command: k k)

► To adjust the screen sharpness.
You can also adjust sharpness in the PICTURE menu.

Transmission [k][k][ ][Set ID][ ][Data][Cr]

Data Min : 00 to Max : 32

Ack [k][ ][Set ID][ ][OK/NG][Data][x]

11. OSD Select (Command: k l)

► To select OSD (On Screen Display) on/off when controlling remotely.

Transmission [k][l][ ][Set ID][ ][Data][Cr]

Data 00 : OSD off 01 : OSD on

Ack [l][ ][Set ID][ ][OK/NG][Data][x]

12. Remote control lock mode (Command: k m)

► To lock the front panel controls on the monitor and remote control.

Transmission [k][m][ ][Set ID][ ][Data][Cr]

Data 00 : Lock off 01 : Lock on

Ack [m][ ][Set ID][ ][OK/NG][Data][x]

* If you are not using the remote control, use this mode.
When main power is off & on (plug-off and plug-in, after 20 - 30 seconds), external control lock is released.
* In the standby mode (DC off by off timer or ‘ka’, ‘mc’ command), and if key lock is on, TV will not turn on by power on key of IR & Local Key.

13. Balance (Command: k t)

► To adjust balance.
You can also adjust balance in the AUDIO menu.

Transmission [k][t][ ][Set ID][ ][Data][Cr]

Data Min : 00 to Max : 64

Ack [t][ ][Set ID][ ][OK/NG][Data][x]

14. Color(Colour) Temperature (Command: x u)

► To adjust colour temperature. You can also adjust Color(Colour) Temperature in the PICTURE menu.

Transmission [x][u][ ][Set ID][ ][Data][Cr]

Data Min : 00 to Max : 64

Ack [u][ ][Set ID][ ][OK/NG][Data][x]

15. ISM Method (Command: j p) (Only Plasma TV)

► To control the ISM method. You can also adjust ISM Method in OPTION menu.

Transmission [j][p][ ][Set ID][ ][Data][Cr]

Data Min : 02: Orbiter
08: Normal
20: Color(Colour) Wash

Ack [p][ ][Set ID][ ][OK/NG][Data][x]

16. Energy Saving (Command: j q)

► To reduce the power consumption of the TV. You can also adjust Energy Saving in PICTURE menu.

Transmission [j][q][ ][Set ID][ ][Data][Cr]

Data
00 : Off
01 : Minimum
02 : Medium
03 : Maximum
04 : Auto
05 : Screen off

* (Depending on model)

Ack [q][ ][Set ID][ ][OK/NG][Data][x]

17. Tune Command (Command: m a)

* This command may work differently depending on model and signal.
• For Europe, Mid-East, Colombia, Asia except South Korea and Japan Model

► Select channel to following physical number.

Transmission [m][a][ ][Set ID][ ][Data 00][ ][Data 01][ ][Data 02][Cr]

* Analogue Terrestrial/Cable

[Data 00][Data 01] Channel Data
Data 00 : High byte channel data
Data 01 : Low byte channel data
- 00 00 ~ 00 C7 (Decimal : 0 ~ 199)

Data 02 : Input Source (Analogue)
- 00 : Terrestrial TV (ATV)
- 80 : Cable TV (CATV)

* Digital Terrestrial/Cable/Satellite

[Data 00][Data 01]: Channel Data
Data 00 : High Channel data
Data 01 : Low Channel data
- 00 00 ~ 27 0F (Decimal: 0 ~ 9999)

Data 02 : Input Source (Digital)
- 10 : Terrestrial TV (DTV)
- 20 : Terrestrial Radio (Radio)
- 40 : Satellite TV (SDTV)
- 50 : Satellite Radio (S-Radio)
- 90 : Cable TV (CADTV)
- a0 : Cable Radio (CA-Radio)

* Tune Command Examples:

1. Tune to the analogue terrestrial (PAL) Channel 10.
   Set ID = All = 00
   Data 00 & 01 = Channel Data is 10 = 00 0a
   Data 02 = Analogue Terrestrial TV = 00
   Result = **ma 00 00 0a 00**

2. Tune to the digital terrestrial (DVB-T) Channel 01.
   Set ID = All = 00
   Data 00 & 01 = Channel Data is 1 = 00 01
   Data 02 = Digital Terrestrial TV = 10
   Result = **ma 00 00 01 10**

3. Tune to the satellite (DVB-S) Channel 1000.
   Set ID = All = 00
   Data 00 & 01 = Channel Data is 1000 = 03 E8
   Data 02 = Digital Satellite TV = 40
   Result = **ma 00 03 E8 40**

Ack [a][ ][Set ID][ ][OK][Data 00][Data 01][Data 02][x]
[a][ ][Set ID][ ][NG][Data 00][x]

- For South Korea, North/Latin America except Colombia Model

► To tune channel to following physical/major/minor number.

Transmission [m][a][ ][0][ ][Data00][ ][Data01]
[ ][Data02][ ][Data03][ ][Data04][ ][Data05][Cr]

Digital channels have a Physical, Major, and Minor channel number. The Physical number is the actual digital channel number, the Major is the number that the channel should be mapped to, and the Minor is the sub-channel. Since the ATSC tuner automatically maps the channel from the Major / Minor number, the Physical number is not required when sending a command in Digital.

* Analogue Terrestrial/Cable

Data 00 : Physical Channel Number
- Terrestrial (ATV) : 02~45 (Decimal: 2 ~ 69)
- Cable (CATV) : 01, 0E~7D (Decimal : 1, 14~125)

[Data 01 ~ 04]: Major/Minor Channel Number
Data 01 & 02: xx (Don't care)
Data 03 & 04: xx (Don't care)

Data 05: Input Source (Analogue)
- 00 : Terrestrial TV (ATV)
- 01 : Cable TV (CATV)

* Digital Terrestrial/Cable

Data 00 : xx (Don't care)

[Data 01][Data 02]: Major Channel Number
Data 01 : High byte Channel Data
Data 02 : Low byte Channel Data
- 00 01 ~ 27 0F (Decimal: 1 ~ 9999)

[Data 03][Data 04]: Minor Channel Number
Data 03 : High byte Channel Data
Data 04 : Low byte Channel Data

Data 05 : Input Source (Digital)
- 02 : Terrestrial TV (DTV) – Use Physical Channel Number
- 06 : Cable TV (CADTV) – Use Physical Channel Number
- 22 : Terrestrial TV (DTV) – Don’t Use Physical Channel Number
- 26 : Cable TV (CADTV) - Don’t Use Physical Channel Number
- 46 : Cable TV (CADTV) – Use Major Channel Number Only (One Part Channel)

Two bytes are available for each major and minor channel data, but usually the low byte is used alone (high byte is 0).

* Tune Command Examples:

1. Tune to the analogue cable (NTSC) channel 35.
   Set ID = All = 00
   Data 00 = Channel Data is 35 = 23
   Data 01 & 02 = No Major = 00 00
   Data 03 & 04 = No Minor = 00 00
   Data 05 = Analogue Cable TV = 01
   Total = **ma 00 23 00 00 00 00 01**

2. Tune to the digital terrestrial (ATSC) channel 30-3.
   Set ID = All = 00
   Data 00 = Don’t know Physical = 00
   Data 01 & 02 = Major is 30 = 00 1E
   Data 03 & 04 = Minor is 3 = 00 03
   Data 05 = Digital Terrestrial TV = 22
   Total = **ma 00 00 00 1E 00 03 22**

Ack [a][ ][Set ID][ ][OK][Data 00][Data 01]
[Data 02][Data 03][Data 04][Data 05]
[x][a][ ][Set ID][ ][NG][Data 00][x]

- For Japan Model

► To tune channel to following physical/major/minor number.

Transmission [m][a][ ][0][ ][Data00][ ][Data01]
[ ][Data02][ ][Data03][ ][Data04][ ][Data05][Cr]

* Digital Terrestrial/Satellite

Data 00: xx (Don't care)

[Data 01][Data 02]: Major Channel Number
Data 01: High byte Channel Data
Data 02: Low byte Channel Data
- 00 01 ~ 27 0F (Decimal: 1 ~ 9999)

[Data 03][Data 04]: Minor/Branch Channel Number
(Don't care in Satellite)
Data 03: High byte Channel Data
Data 04: Low byte Channel Data

Data 05 : Input Source (Digital/Satellite for Japan)
- 02 : Terrestrial TV (DTV)
- 07 : BS (Broadcasting Satellite)
- 08 : CS1 (Communication Satellite 1)
- 09 : CS2 (Communication Satellite 2)

* Tune Command Examples:

1 Tune to the digital terrestrial (ISDB-T) channel 17-1.
Set ID = All = 00
Data 00 = Don't know Physical = 00
Data 01 & 02 = Major is 17 = 00 11
Data 03 & 04 = Minor/Branch is 1 = 00 01
Data 05 = Digital Terrestrial TV = 02
Total = **ma 00 00 00 11 00 01 02**

2. Tune to the BS (ISDB-BS) channel 30.
Set ID = All = 00
Data 00 = Don't know Physical = 00
Data 01 & 02 = Major is 30 = 00 1E
Data 03 & 04 = Don't Care = 00 00
Data 05 = Digital BS TV = 07
Total = **ma 00 00 00 1E 00 00 07**

* This feature is varied based on the model.

Ack [a][ ][Set ID][ ][OK][Data 00][Data 01]
[Data 02][Data 03][Data 04][Data 05]
[x][a][ ][Set ID][ ][NG][Data 00][x]

18. Channel(Programme) Add/Del(Skip)
(Command: m b)

► To skip current channel(programme) for next time.

Transmission [m][b][ ][Set ID][ ][Data][Cr]

Data 00 : Del(ATSC,ISDB)/Skip(DVB) 01 : Add

Ack [b][ ][Set ID][ ][OK/NG][Data][x]

* Set the saved channel status to del(ATSC, ISDB)/ skip(DVB) or add.

19. Key (Command: m c)

► To send IR remote key code.

Transmission [m][c][ ][Set ID][ ][Data][Cr]

Data Key code - See p.2.

Ack [c][ ][Set ID][ ][OK/NG][Data][x]

20. Control Back Light (Command: m g)

- For LCD TV / LED TV

► To control the back light.

Transmission [m][g][ ][Set ID][ ][Data][Cr]

Data Min : 00 to Max : 64

Ack [g][ ][Set ID][ ][OK/NG][Data][x]

Control Panel Light (Command: m g)

- For Plasma TV

► To control the panel light.

Transmission [m][g][ ][Set ID][ ][Data][Cr]

Data Min : 00 to Max : 64

Ack [g][ ][Set ID][ ][OK/NG][Data][x]

21. Input select (Command: x b)
(Main Picture Input)

► To select input source for main picture.

Transmission [x][b][ ][Set ID][ ][Data][Cr]

Data

00 : DTV	01 : CADTV
02 : Satellite DTV ISDB-BS (Japan)	10 : ATV
03 : ISDB-CS1 (Japan)	
04 : ISDB-CS2 (Japan)	
11 : CATV	
20 : AV or AV1	21 : AV2
40 : Component1	41 : Component2
90 : HDMI1	91 : HDMI2
92 : HDMI3	93 : HDMI4

Ack [b][ ][Set ID][ ][OK/NG][Data][x]

* This function depends on model and signal.

22. 3D(Command: x t) (only 3D models)
(Depending on model)

► To change 3D mode for TV.

Transmission [x][t][ ][Set ID][ ][Data 00][ ][Data 01][ ][Data 02][ ][Data 03][Cr]

Data Structure
[Data 00] 00 : 3D On
01 : 3D Off
02 : 3D to 2D
03 : 2D to 3D
[Data 01] 00 : Top and Bottom
01 : Side by Side
02 : Checker Board
03 : Frame Sequential
04 : Column interleaving
05 : Row interleaving
[Data 02] 00 : Right to Left
01 : Left to Right
[Data 03] 3D Effect(3D Depth): Min : 00 - Max : 14 (*transmit by Hexadecimal code)

* If [Data 00] is 00 (3D On), [Data 03] has no meaning.
* If [Data 00] is 01 (3D off) or 02 (3D to 2D), [Data 01], [Data 02] and [Data 03] have no meaning.
* If [Data 00] is 03(2D to 3D), [Data 01] and [Data 02] have no meaning.
* If [Data 00] is 00 (3D On) or 03 (2D to 3D), [Data 03] works when 3D Mode (Genre) is manual only
* All 3D pattern options ([Data 01]) may not be available according to broadcasting/video signal.

[Data 00]	[Data 01]	[Data 02]	[Data 03]
00	O	O	O
01	X	X	X
02	X	X	X
03	X	X	O

X : don't care

Ack [t][ ][Set ID][ ][OK][Data00][Data01][Data02][Data03][x]
[t][ ][Set ID][ ][NG][Data00][x]

23. Extended 3D(Command: x v) (only 3D models)
(Depending on model)

► To change 3D option for TV.

Transmission [x][v][ ][Set ID][ ][Data 00][ ][Data 01][Cr]

[Data 00] 3D option
00 : 3D Picture Correction
01 : 3D Depth (3D Mode is Manual Only)
02 : 3D Viewpoint
06 : 3D Color Correction
07 : 3D Sound Zooming
08 : Normal Image View
09 : 3D Mode (Genre)

[Data 01] It has own range for each 3D option determined by [Data 00].
1) When [Data 00] is 00
00 : Right to Left
01 : Left to Right

2) When [Data 00] is 01, 02
Data Min: 0 - Max: 14 (*transmit by Hexadecimal code)
Data value range(0 - 20) converts Viewpoint range (-10 - +10) automatically (Depending on model)

* This option works when 3D Mode (Genre) is manual only.

3) When [Data 00] is 06, 07
00 : Off
01 : On

4) When [Data 00] is 08
00 : Revert to 3D video from 3D-to-2D converted 3D video
01 : Change 3D video to 2D video, except 2D-to-3D video
* If conversion condition doesn't meet, command is treated as NG.

5) When [Data 00] is 09
00 : Standard
01 : Sport
02 : Cinema
03 : Extreme
04 : Manual

Ack [v][ ][Set ID][ ][OK][Data00][Data01][x]
[v][ ][Set ID][ ][NG][Data00][x]

LG

Life's Good