Owner's Manual

IPS LED MONITOR (LED MONITOR*)

*Disclaimer. LG LED Monitor applies LCD screen with LED backlights.This product is a computer monitor and not for television purpose.

Please read the safety information carefully before using the product.

IPS LED Monitor (LED Monitor) Model List

27UD88

www.lg.com

ENGLISH

CONTENTS

3 LICENSE

4 ASSEMBLING AND PREPARING

4 Product Components
5 Supported Drivers and Software
6 Component and Button Description
6 - How to Use the Joystick Button
7 Input Connector
8 Moving and Lifting the Monitor
9 Installing the Monitor
9 - Assembling the stand base
10 - Using the cable holder
11 - Installing onto a table
12 - Adjusting the angle
12 - Adjusting the Stand Height
13 - Pivot Feature
14 - Using the Kensington lock
14 - Detaching the Stand Body
14 - Installing the wall mount plate
15 - Installing to a wall

16 USING THE MONITOR

16 Connecting to a PC
16 - HDMI connection
16 - DisplayPort connection
16 - USB-C connection
17 Connecting Peripherals
17 - USB Cable connection - PC
18 - Connecting Headphones
18 Service only port

19 USER SETTINGS

19 Activating the Main Menu
20 Customizing settings
20 - Menu Settings
20 - -Quick Settings
21 - -PBP
22 - -Picture
25 - -General
27 - -Reset

28 TROUBLESHOOTING

30 SPECIFICATIONS

30 27UD88
31 Factory Support Mode (Preset Mode, PC)
31 HDMI
31 DisplayPort/ USB-C
32 HDMI Timing (Video)
32 Power LED

LICENSE

Each model has different licenses. Visit www.lg.com for more information on the license.

The terms HDMI and HDMI High-Definition Multimedia Interface, and the HDMI Logo are trademarks or registered trademarks of HDMI Licensing Administrator, Inc.

VESA, VESA logo, DisplayPort Compliance Logo and DisplayPort Compliance Logo for dual-mode source are all registered trademarks of the Video Electronics Standards Association.

The SuperSpeed USB Trident logo is a registered trademark of USB Implementers Forum, Inc.

The following content is only applied to the monitor which is sold in Europe market and which needs to meet the ErP Directive:

* This monitor is set to be turned off automatically in 4 hours after you turned on display if there is no adjustment to display.

* To make this setting be disabled, change the option to 'Off' in OSD menu of "Automatic Standby".

ASSEMBLING AND PREPARING

Product Components

Please check whether all the components are included in the box before using the product. If there are missing components, contact the retail store where you purchased the product. Note that the product and components may look different from those shown here.

CD(Owner's Manual) / Card

Power Cord

AC-DC Adapter

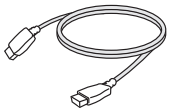

HDMI Cable

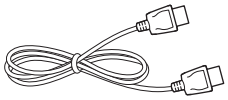

DisplayPort Cable

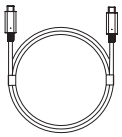

USB C-C cable

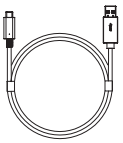

USB C-A cable

Stand Base

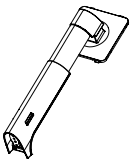

Stand Body

Cable Holder

CAUTION

- Always use genuine components to ensure safety and product performance.
- The product warranty will not cover damage or injury caused by the use of counterfeit components.
- It is recommend that use the supplied components.
- If you use generic cables not certified by LG, the screen may not display or there may be image noises.

NOTE

- Note that the components may look different from those shown here.
- Without prior notice, all information and specifications in this manual are subject to change to improve the performance of the product.
- To purchase optional accessories, visit an electronics store or online shopping site or contact the retail store where you purchased the product.

Supported Drivers and Software

You can download and install the latest version from the LGE website (*www.lg.com*).

Drivers and Software	Installation Priority	27UD88
Monitor Driver	Recommended	O
OnScreen Control	Recommended	O
Dual Controller	Optional	O
TRUE COLOR PRO	Optional	O

Component and Button Description

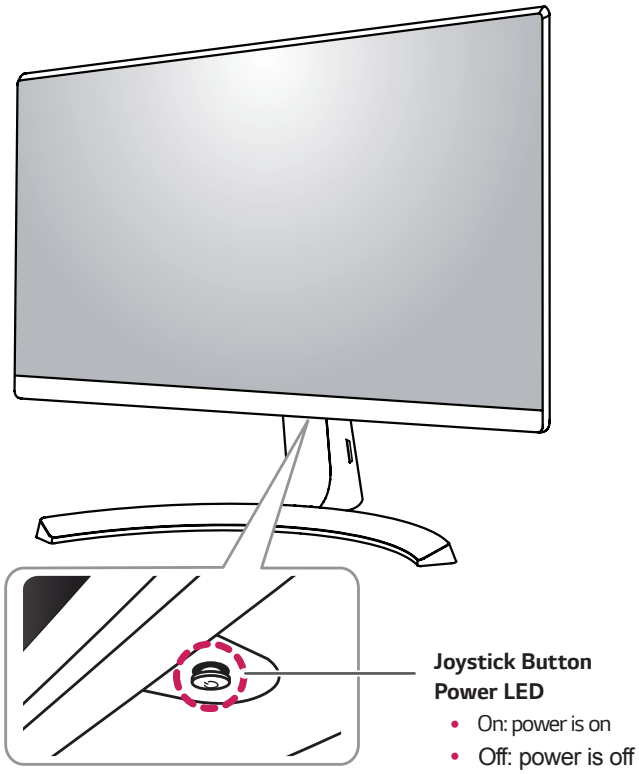

How to Use the Joystick Button

You can easily control the functions of the monitor by pressing the joystick button or moving it left/right with your finger.

Basic Functions

	⏻	**Power on**	Press the joystick button once with your finger to turn on the monitor.
		Power off	Press and hold the joystick button once with your finger to turn off the monitor.
	◀/▶	**Volume Control**	You can control the volume by moving the joystick button left/right.

NOTE

- The joystick button is located at the bottom of the monitor.

Input Connector

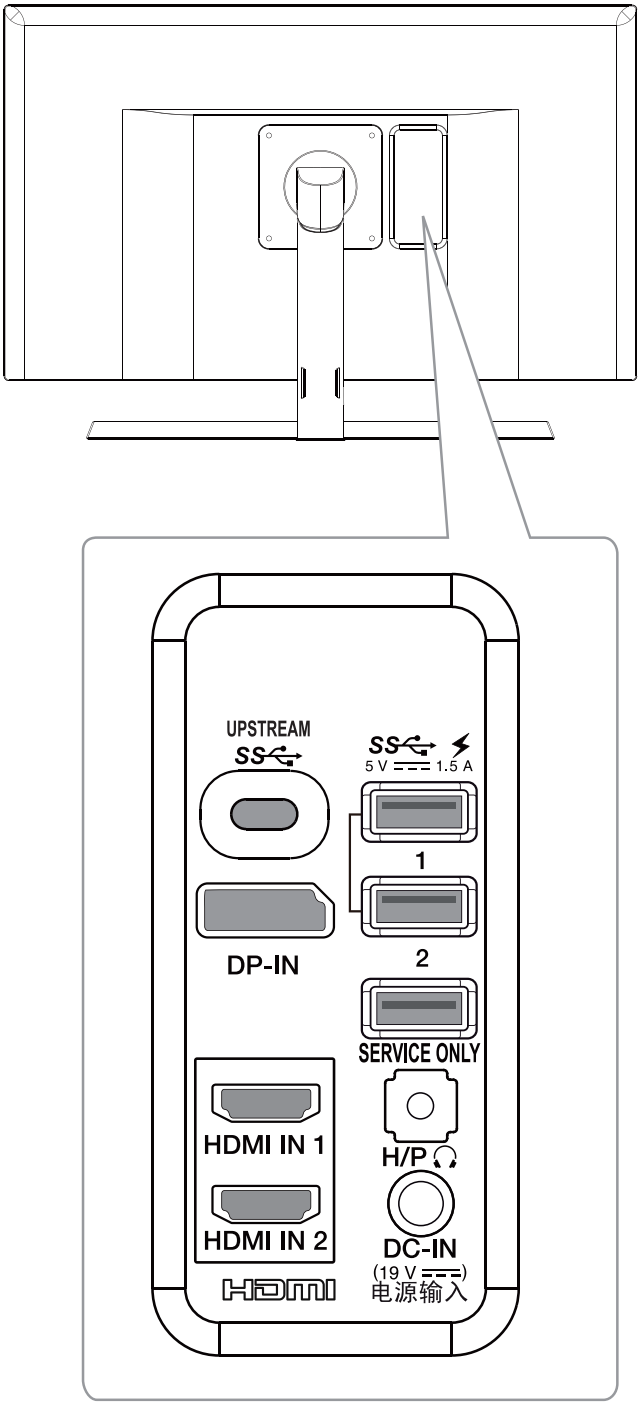

Moving and Lifting the Monitor

When moving or lifting the monitor, follow these instructions to prevent the monitor from being scratched or damaged and to ensure safe transportation regardless of its shape or size.

- It is advisable to place the monitor in the original box or packing material before attempting to move it.
- Before moving or lifting the monitor, disconnect the power cord and all cables.
- Hold the top and bottom of the monitor frame firmly. Do not hold the panel itself.

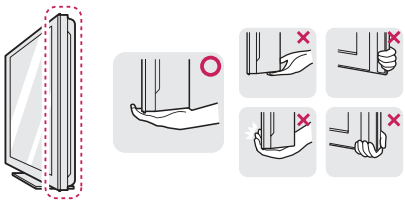

- When holding the monitor, the screen should face away from you to prevent it being scratched.

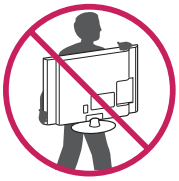

- When moving the monitor, avoid any strong shock or vibrations to the product.
- When moving the monitor, keep it upright, never turn the monitor on its side or tilt it sideways.

CAUTION

- As far as possible, avoid touching the monitor screen. This may result in damage to the screen or some of the pixels used to create images.

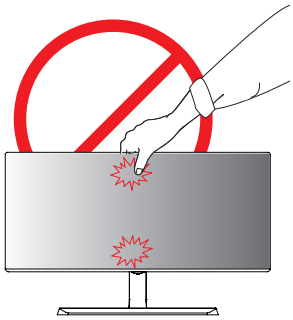

- If you use the monitor panel without the stand base, its joystick button may cause the monitor to become unstable and fall, resulting in damage to the monitor or human injury. In addition, this may cause the joystick button to malfunction.

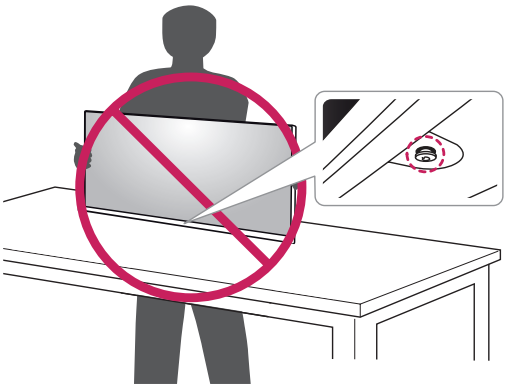

Installing the Monitor

Assembling the stand base

1

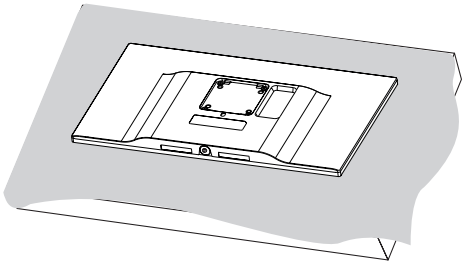

CAUTION

- To protect the screen from scratches, cover the surface with a soft cloth.

2

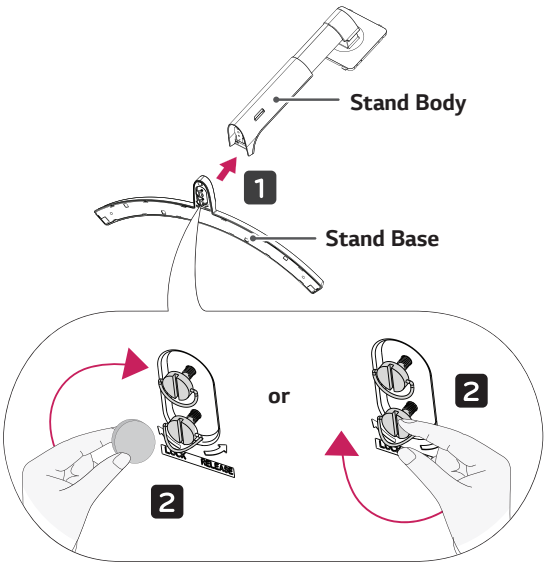

3

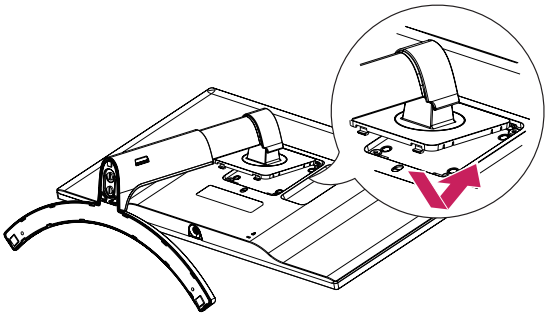

4

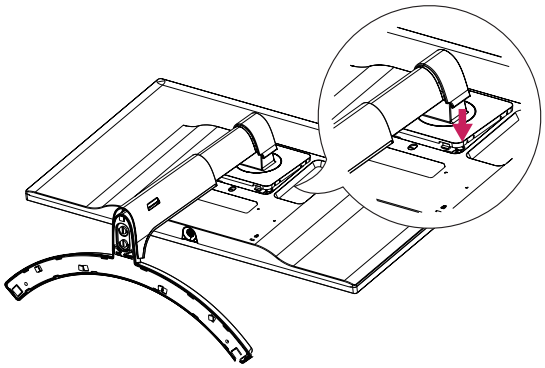

NOTE

- Press the stand until the button reaches the top.

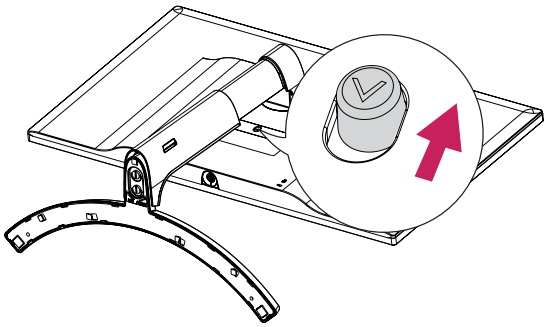

CAUTION

- Illustrations in this document represent typical procedures, so they may look different from the actual product.
- Applying excessive force when tightening screws may cause damage to the monitor. Damage caused in this way will not be covered by the product warranty.
- Do not carry the monitor upside down by just holding the base. This may cause the monitor to fall off the stand and could result in personal injury.
- When lifting or moving the monitor, do not touch the monitor screen. The force applied to the monitor screen may cause damage to it.

NOTE

- You can disassemble the stand in the reverse order of the assembly.

Using the cable holder

Arrange the cables using the cable holder as shown in the illustration.

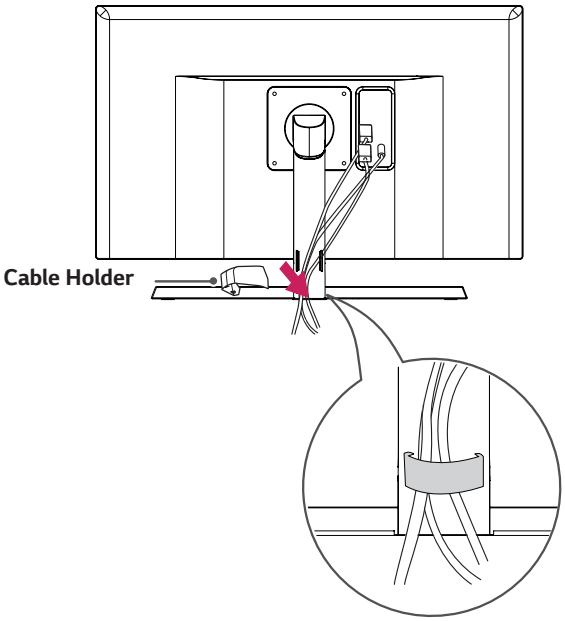

Installing onto a table

1 Lift the monitor and place it on the table in an upright position.

Place at least **100 mm** away from the wall to ensure sufficient ventilation.

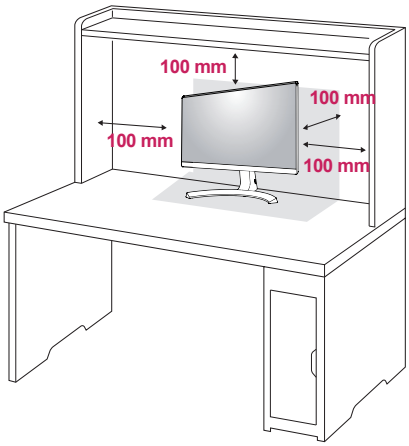

2 Connect the power adapter to the monitor and then plug the power cord into the wall outlet.

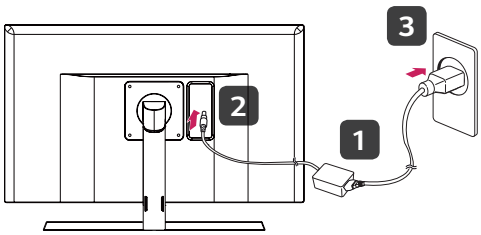

3 Press the joystick button on the bottom of the monitor to turn on the monitor.

CAUTION

- Unplug the power cord prior to moving or installing the monitor. There is risk of electric shock.

Cautions When Connecting Power Cord

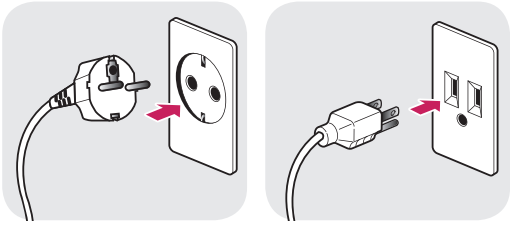

100-240 V ~

- Make sure to use the power cord that is provided in the product package and connect it to a grounded power outlet.
- If you need another power cord, please contact your local dealer or the nearest retail store.

Adjusting the angle

1 Place the monitor in an upright position, mounted on the stand base.

2 Adjust the angle of the screen. The angle of the screen can be adjusted forwards or backwards for a comfortable viewing experience.

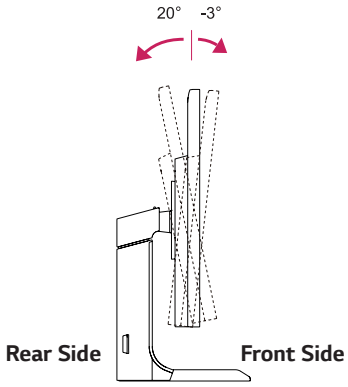

WARNING

- To avoid injury to the fingers when adjusting the screen, do not hold the lower part of the monitor's frame as illustrated below.

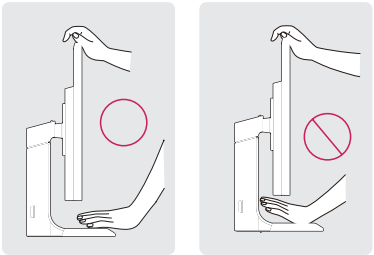

- Be careful not to touch or press the screen area when adjusting the angle of the monitor.

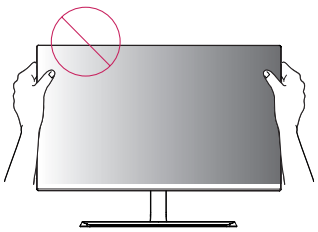

Adjusting the Stand Height

1 Handle the monitor with both hands for safety.

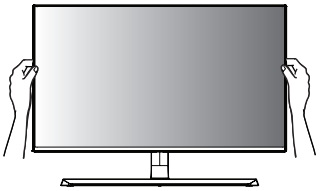

2 The height can be adjusted up to **110.0 mm**.

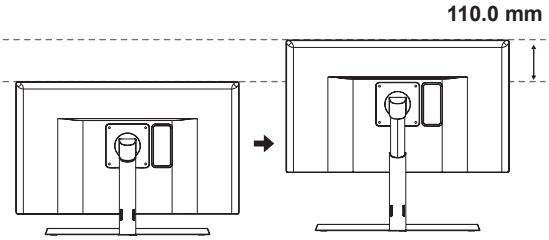

WARNING

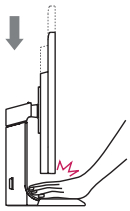

- Do not put your fingers or hand between the screen and the base (chassis) when adjusting the screen's height.

Pivot Feature

The pivot feature allows the monitor to rotate 90° clockwise.

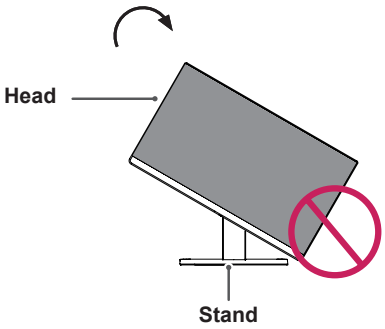

WARNING

- To avoid scratching the stand base, make sure that when rotating the monitor using the pivot feature, the stand does not make contact with the monitor.

1 Raise the monitor to the maximum height.

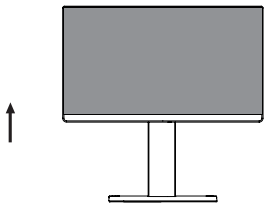

2 Adjust the angle of the monitor in the direction of the arrow as shown in the figure.

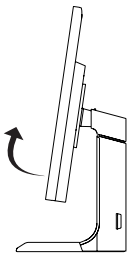

3 Rotate the monitor clockwise as shown in the figure.

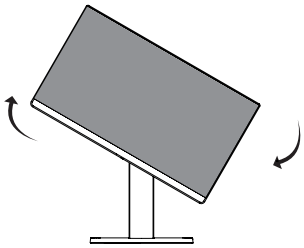

4 Complete the installation by rotating the monitor 90° as shown below.

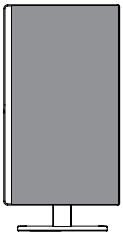

NOTE

- Auto Pivot feature of the display is not supported.
- The screen can be rotated easily using the screen pivot shortcut key provided with your Windows operating system. Note that some Windows versions and some graphics card drivers may use different settings for the screen pivot key or may not support the pivot key at all.
- Windows screen pivot shortcut keys
  - 0°: Ctrl + Alt + Up arrow key (↑)
  - 90°: Ctrl + Alt + Left arrow key (←)
  - 180°: Ctrl + Alt + Down arrow key (↓)
  - 270°: Ctrl + Alt + Right arrow key (→)

WARNING

- Take care when rotating the monitor if the cable is connected.
- To avoid injury when rotating the display, do not place your fingers between the display and the stand base.

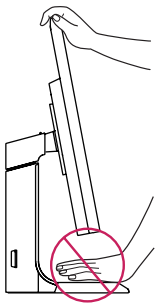

Using the Kensington lock

The Kensington security system connector is located at the back of the Monitor set.
For more information on installation and usage, refer to the Kensington lock user manual or visit the website at http://www.kensington.com.

Connect the Kensington security system cable between the Monitor set and a table.

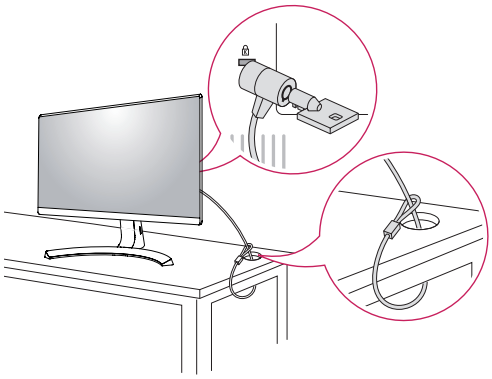

NOTE

- Use of the Kensington lock is optional. The accessories can be purchased at your local electronics store.

Detaching the Stand Body

1 Place the monitor's screen face down. To protect the screen from scratches, cover the surface with a soft cloth.

2 Remove the stand from the monitor by pressing the button on the bottom center of the back of the monitor.

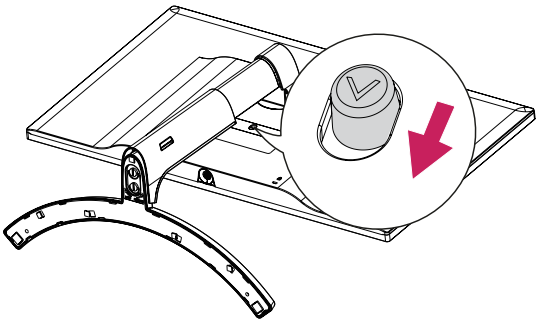

Installing the wall mount plate

This monitor supports the specification of the standard wall mount plate or compatible device.

1 Place the screen face down. To protect the screen from scratches, cover the surface with a soft cloth.

2 Place the wall mount plate onto the monitor and align it with the screw holes.

3 Tighten the four screws to fix the plate to the monitor using a screwdriver.

NOTE

- The wall mount plate is sold separately.
- For more information on installation, refer to the wall mount plate's installation guide.
- Be careful not to use excessive force when mounting the wall mount plate, as this can damage the monitor's screen.

Installing to a wall

Install the monitor at least 100 mm away from the wall and leave about 100 mm of space at each side of the monitor to ensure sufficient ventilation. Detailed installation instructions can be obtained from your local retail store. Please refer to the manual to install and set up a tilting wall mounting bracket.

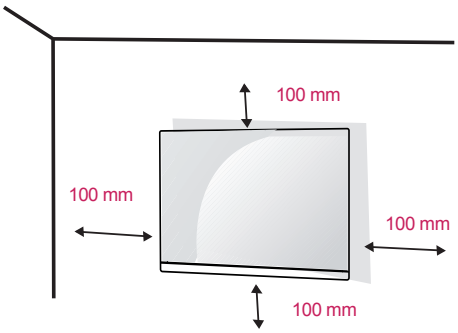

To install the monitor to a wall, attach a wall mounting bracket (optional) to the back of the monitor.
Make sure that the wall mounting bracket is securely fixed to the monitor and to the wall.

1 If you use screw longer than standard, the monitor might be damaged internally.
2 If you use improper screw, the product might be damaged and drop from mounted position.
In this case, LG Electronics is not responsible for it.

Wall Mount (A x B)	100 x 100
Standard screw	M4 x L10
Number of screws	4
Wall Mount Plate (Optional)	RW120 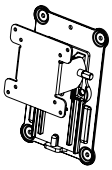

- Wall Mount (A x B)

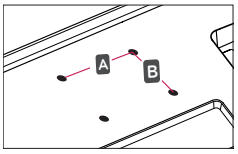

CAUTION

- Unplug the power cord before moving or installing the monitor to avoid electric shocks.
- Installing the monitor on the ceiling or on a slanted wall may result in the monitor falling off, which could lead to injury. Please use the genuine LG wall mounting bracket. For more information, contact your local retail store or a qualified installer.
- Applying excessive force when fastening screws may cause damage to the monitor. Damage caused in this way will not be covered by the product warranty.
- Use the wall mounting bracket and screws that conform to the VESA standard. Damage caused by the use or misuse of inappropriate components will not be covered by the product warranty.
- Screw length from outer surface of back cover should be under 8mm.

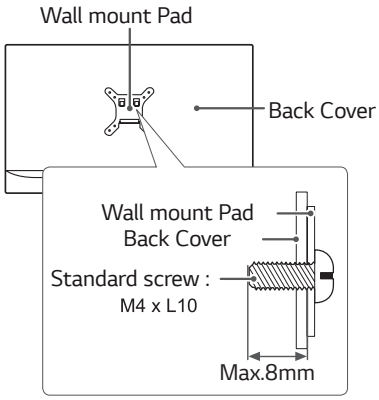

NOTE

- Use the screws specified by the VESA standard.
- The wall mount kit includes the installation guide and all necessary parts.
- The wall mounting bracket is optional. The accessories can be purchased at your local retail store.
- The length of the screw may differ for each wall mounting bracket. Ensure the correct length screw is used.
- For more information, please refer to the user manual for the wall mounting bracket.

USING THE MONITOR

Connecting to a PC

- This monitor supports the *Plug and Play feature.
  *Plug and Play: A feature that allows you to add a device to your computer without having to reconfigure anything or install any manual drivers.

HDMI connection

Transmits the digital video and audio signals from your PC and A/V devices to the monitor. Connect your PC and AV device to the monitor with the HDMI cable as illustrated below.
Press the menu button and then select the input option from the input menu.

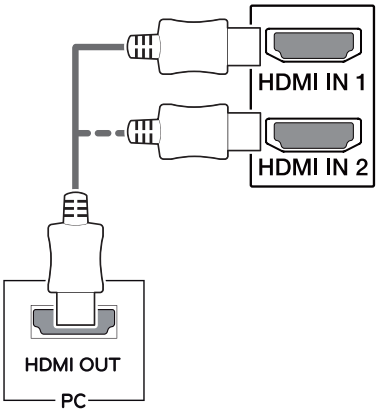

NOTE

- If you use HDMI PC, it can cause compatibility problem.
- Use a certified cable with the HDMI logo attached. If you do not use a certified HDMI cable, the screen may not display or a connection error may occur.
- Recommended HDMI cable types
  - High-Speed HDMI®/™ Cable
  - High-Speed HDMI®/™ Cable with Ethernet

DisplayPort connection

Transmits the digital video and audio signals from your PC to the monitor. Connect your PC to the monitor using the DisplayPort cable as illustrated below.
Press the menu button and then select the input option from the input menu.

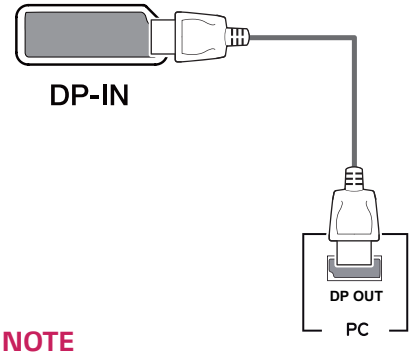

NOTE

- There may be no video or audio output depending on the DP version of the PC.
- If you use generic cables not certified by LG, the screen may not display or there may be image noises.

USB-C connection

Transmits digital video and audio signals and USB data from your PC to the monitor.
Connect the monitor to your PC using the USB-C cable as shown in the illustration below.
Press the menu button and then select the input option from the input menu.

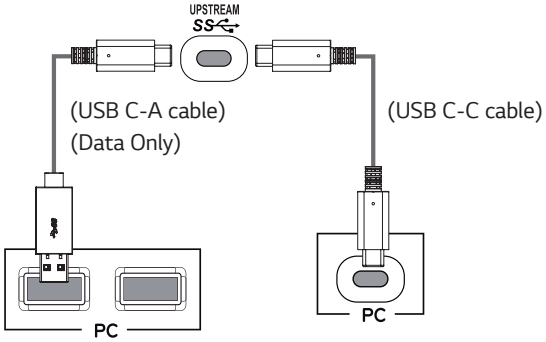

NOTE

- PD(Power Delivery), DP Alternate Mode(DP over USB-C) and USB Data are supported via USB-C Port.
- Features may not work properly depending on the connected device's specifications and the environment.
- USB-C port is not for the Monitor Power source but for a PC power source.
  Connect Adapter to supply power to the Monitor .

Connecting Peripherals

USB Cable connection - PC

The USB port on the product functions as a USB hub.
Please connect the USB C-C or USB C-A cable to the PC.

NOTE

- Make sure to install the most recent Windows OS service pack before using the product.
- Peripheral devices are sold separately.
- A keyboard, mouse, or USB device can be connected to the USB port.
- When **Quick Charge** is set to **On** , data transmission through the USB1/2 port is not available (e.g. connecting your keyboard, mouse, or other USB storage devices to the monitor). (Go to **General** > **Quick Charge** to set Quick Charge to **On** or **Off** .)
- The charging speed may vary depending on the device.

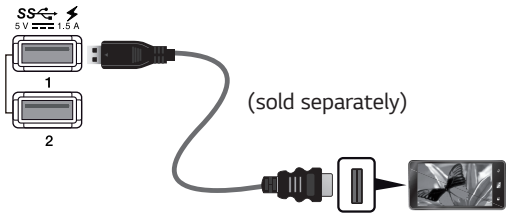

CAUTION

Cautions When Using a USB Device

- A USB device with an automatic recognition program installed, or that uses its own driver, may not be recognized.
- Some USB devices may not be supported or may not work properly.
- It is recommended to use a USB hub or hard disk drive with power supplied. (If the power supply is not adequate, the USB device may not be recognized properly.)
- If Quick Charge is off and the upstream Port is not connected with Host PC, monitor may not support 'Charge' .

Connecting Headphones

Connect peripherals to the monitor via the headphones port. Connect as illustrated.

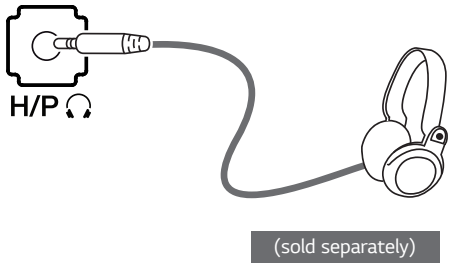

NOTE

- Peripheral devices are sold separately.
- If you use angled earphones, it may cause a problem with connecting another external device to the monitor. Therefore, it is recommended to use straight earphones.

Angled

Straight

- Depending on the audio settings of the PC and external device, headphones and speaker functions may be limited.

Service only port

The port is used only for "Service".

USER SETTINGS

Activating the Main Menu

1 Press the joystick button on the bottom of the monitor.
2 Move the joystick up/down (▲/▼) and left/right(◀/▶) to set the options.
3 Press the joystick button once more to exit the main menu.

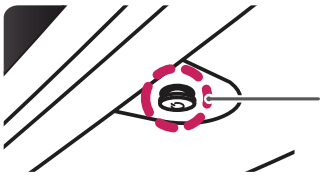

Button	Menu Status		Description
	Main menu disabled		Enables the main menu.
	Main menu enabled		Exits the main menu. (Holding down the button to turn off the monitor. You can turn off the monitor this way at any time, including when the OSD is on.)
	◀	**Main menu disabled**	Adjusts the monitor volume level.
		Main menu enabled	Enters the menu features.
	▶	**Main menu disabled**	Adjusts the monitor volume level.
		Main menu enabled	Enters the input feature.
	▲	**Main menu disabled**	Enables the main menu.
		Main menu enabled	Enters the game mode feature.
	▼	**Main menu disabled**	Enables the main menu.
		Main menu enabled	Turns off the monitor.

Main Menu Features

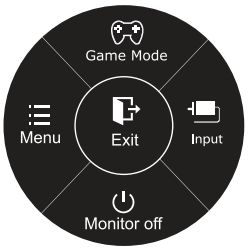

Long press:Monitor off

Main Menu	Description
Menu	Configures the screen settings.
Game Mode	You can change Picture Mode to a gaming mode.
Input	Sets input mode.
Monitor off	Turns off the monitor.
Exit	Exits the main menu.

Customizing settings

Menu Settings

-Quick Settings

1 To view the **OSD menu**, press the **joystick button** at the bottom of the monitor and then enter the **Menu**.
2 Go to **Quick Settings** > **Brightness** by moving the joystick.
3 Configure the options following the instructions that appear in the bottom right corner.
4 To return to the upper menu or set other menu items, move the joystick to ◀ or pressing (◉ / OK) it.
5 If you want to exit the OSD menu, move the joystick to ◀ until you exit.

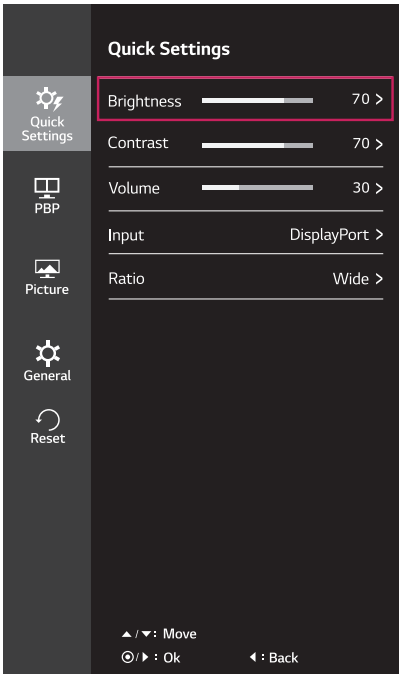

Each option is described below.

Menu > Quick Settings	Description	
Brightness	Adjusts the color contrast and brightness of the screen.	
Contrast		
Volume	Adjusts the volume.	
	NOTE • You can adjust Mute/ Unmute by moving the joystick button to ▼ in the Volume menu.	
Input	Selects the current input mode.	
Ratio	Adjusts the screen ratio.	
	Wide	Displays the video in wide-screen, regardless of the video signal input.
	Original	Displays a video according to the input video signal aspect ratio.
	1:1	The aspect ratio is not adjusted from the original.

NOTE

- The display may look the same for Wide, Original, and 1:1 options at the recommended resolution.
- The ratio is disabled in the interlaced signal.

-PBP

1 To view the **OSD menu**, press the **joystick button** at the bottom of the monitor and then enter the **Menu**.
2 Go to **PBP** by moving the joystick.
3 Configure the options following the instructions that appear in the bottom right corner.
4 To return to the upper menu or set other menu items, move the joystick to ◀ or pressing (◉ / OK) it.
5 If you want to exit the OSD menu, move the joystick to ◀ until you exit.

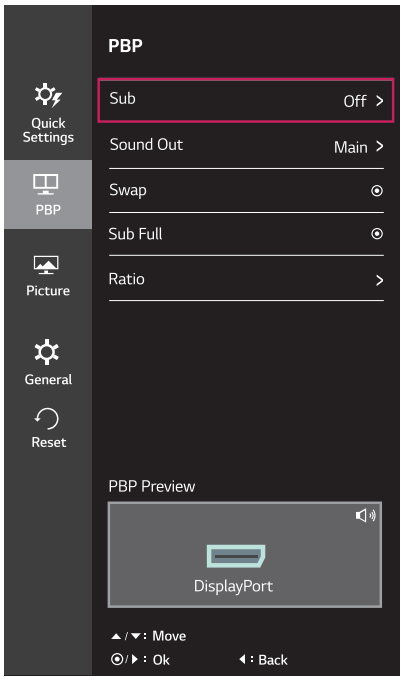

Each option is described below.

Menu > PBP	Description					
Sub	Displays the screens of two input modes on one monitor.					
	PBP Connection		**Sub Screen (Right)**			
			HDMI 1	**HDMI 2**	**DisplayPort**	**USB-C**
	Main Screen (Left)	**HDMI 1**	-	-	O	O
		HDMI 2	-	-	O	O
		DisplayPort	O	O	-	-
		USB-C	O	O	-	-
Sound Out	Changes the audio output in PBP mode.					
Swap	Toggles between the main screen and sub screen in PBP mode.					
Sub Full	Converts the sub screen of PBP mode to the wide screen.					
Ratio	Adjusts the aspect ratio of the main screen or sub screen.					
	Main	**Wide**	Displays the video to fit the PBP screen, regardless of the video signal input.			
		Original	Displays the video in the aspect ratio of the video signal input on the PBP screen.			
	Sub	**Wide**	Displays the video to fit the PBP screen, regardless of the video signal input.			
		Original	Displays the video in the aspect ratio of the video signal input on the PBP screen.			

NOTE

- When the Sub mode is Off, Sound Out, Swap, Sub Full, and Ratio menus become disabled.
  The Main/Sub options for Ratio become disabled if there is no signal.
- The optimal resolution for PBP mode is set automatically when PBP mode is set.

-Picture

1 To view the **OSD menu**, press the **joystick button** at the bottom of the monitor and then enter the **Menu**.
2 Go to **Picture** by moving the joystick.
3 Configure the options following the instructions that appear in the bottom right corner.
4 To return to the upper menu or set other menu items, move the joystick to ◀ or pressing (◉ / OK) it.
5 If you want to exit the OSD menu, move the joystick to ◀ until you exit.

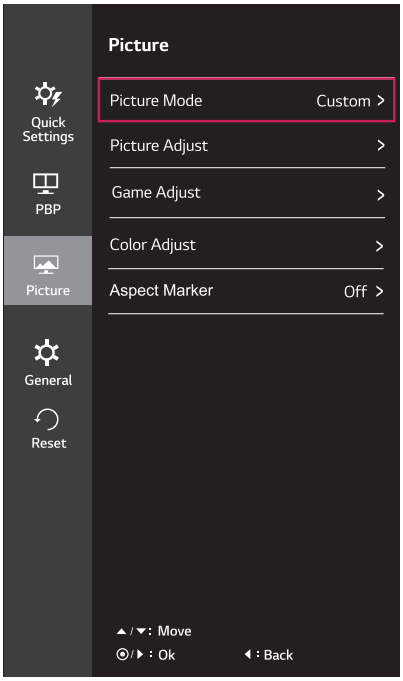

Each option is described below.

Menu > Picture	Description	
Picture Mode	**Custom**	Allows the user to adjust each element. The color mode of the main menu can be adjusted.
	Reader	Optimizes the screen for viewing documents. You can brighten the screen in the OSD menu.
	sRGB	A standard RGB color space for the monitor and printer.
	Color Weakness	This mode is for users who cannot distinguish between red and green. It enables users with color weakness to easily distinguish between the two colors.
	FPS Game 1	This mode is optimized for FPS games.
	FPS Game 2	It has a higher Black Stabilizer value than FPS Game 1. It is suitable for very dark FPS games.
	RTS Game	This mode is optimized for RTS Game.
	Custom (Game)	In this mode, users can customize various elements including game-related options.
	EBU	A standard TV PAL color space for broadcasting.
	REC709	A standard HDTV color space for broadcasting.
	SMPTE-C	A standard TV NTSC color space for broadcasting.
	DICOM	Optimizes the screen for viewing X-ray images. You can brighten the screen in the OSD menu. **NOTE** • This product has been approved as an IT device and not as a medical device. It is intended for office use only. (It may be used for education and reference purposes but not for medical diagnosis.)
	Calibration 1	Adjusts to the last calibrated screen.
	Calibration 2	Adjusts to the previously calibrated screen.
	NOTE • If the **picture mode** is changed in the DP (DisplayPort) input, the screen may flicker or the resolution of your PC screen may be affected. • **Calibration 2** : Installation of TRUE COLOR PRO and proceeding **Calibration** will enable this menu.	

Picture Adjust	**SUPER RESOLUTION+**	**High**	Optimized picture quality is displayed when a user wants crystal clear images. It is effective for high quality video or game.
		Middle	The optimized picture quality is displayed when a user wants images between low and high modes for comfortable viewing. It is effective for UCC or SD video.
		Low	The optimized picture quality is displayed when a user wants smooth and natural images. It is effective for slow-moving pictures or still images.
		Off	Select this option for everyday viewing. SUPER RESOLUTION+ is turned off in this mode.
	Sharpness	Adjusts the sharpness of the screen.	
	Black Level	Sets the offset level (for HDMI only). • Offset: as a reference for a video signal, this is the darkest color the monitor can display.	
		High	Keeps the current contrast ratio of the screen.
		Low	Lowers the black levels and raises the white levels from the current contrast ratio of the screen.
	HDMI ULTRA HD Deep Color	Provides sharper images when connected to a device supporting ULTRA HD Deep Color.	

4K@60 Hz Support Format[1)]

Resolution	Frame rate (Hz)	Color Depth / Chroma Sampling	
		8 bit	**10 bit**
3840 x 2160	59.94 60.00	YCbCr 4:2:0	
		YCbCr 4:2:2	
		YCbCr 4:4:4	-
		RGB 4:4:4	-

1) Supported when HDMI ULTRA HD Deep Color is set to On.

NOTE

- If the connected device does not support ULTRA HD Deep Color, the feature may not work properly.
- If a problem occurs, set the HDMI ULTRA HD Deep Color option to Off.

	DFC	Adjusts the brightness automatically according to the screen.

Game Adjust	**Response Time**	Sets a response time for displayed pictures based on the speed of the screen. For a normal environment, it is recommended that you use Middle. For a fast-moving picture, it is recommended that you use high. Setting to High may cause image sticking.	
		High	Sets the response time to High.
		Middle	Sets the response time to Middle.
		Low	Sets the response time to Low.
		Off	Does not use the response time improvement feature.
	FreeSync	Provides seamless and natural images by synchronizing the vertical frequency of the input signal with that of the output signal. ⚠ **CAUTION** • Supported Interface: DisplayPort. • Supported Graphic Card : A graphic card that supports AMD's FreeSync is necessary. • Supported Version : Make sure to update the graphic card to the latest driver. • For more information and requirement, refer to AMD website at http://www.amd.com/FreeSync	
		On	FreeSync function on.
		Off	FreeSync function off.
	Black Stabilizer	You can control the black contrast to have better visibility in dark scenes. Increasing the Black Stabilizer value brightens the low gray level area on the screen. (You can easily distinguish objects on dark game screens.) Reducing the Black Stabilizer value darkens the low gray level area and increases the dynamic contrast on the screen.	
Color Adjust	**Gamma**	The higher the gamma value, the darker the image becomes. Likewise, the lower the gamma value, the lighter the image becomes. If you do not need to adjust the gamma settings, select Off.	
	Color Temp	**Manual**	Adjusts the color temperature in 500K increments. (Note that 9300K is supported instead of 9500K.)
		Custom	The user can adjust it to red, green, or blue by customization
	Red	You can customize the picture color using Red, Green, and Blue colors.	
	Green		
	Blue		
	Six Color	Meets the user requirements for colors through adjusting the color and saturation of the six colors(**Red_Hue, Red_Saturation, Green_Hue, Green_Saturation, Blue_Hue, Blue_Saturation, Cyan_Hue, Cyan_Saturation, Magenta_Hue, Magenta_Saturation, Yellow_Hue, Yellow_Saturation**) and saving the settings.	
		*Hue: Adjusts tone of the screen. *Saturation: Adjusts the saturation of the screen colors. The lower the value, less saturated and bright the colors become. The higher the value, the more saturated and dark the colors become.	
	Reset	Returns the color settings to the default settings.	
Aspect Marker	This function is to express aspect ratio for screen .		
	Off	Disables Aspect Marker	
	17:9	Enables to marker for 17:9	
	4:3	Enables to marker for 4:3	
	2.35:1	Enables to marker for 2.35:1	
	2.39:1	Enables to marker for 2.39:1	

-General

1 To view the **OSD menu**, press the **joystick button** at the bottom of the monitor and then enter the **Menu**.
2 Go to **General** by moving the joystick.
3 Configure the options following the instructions that appear in the bottom right corner.
4 To return to the upper menu or set other menu items, move the joystick to ◀ or pressing (◉ / OK) it.
5 If you want to exit the OSD menu, move the joystick to ◀ until you exit.

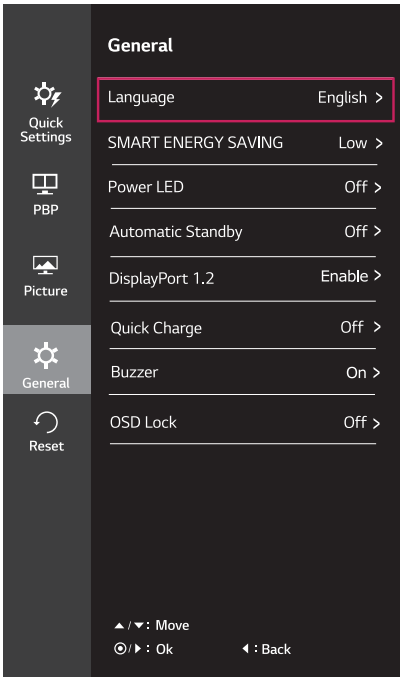

Each option is described below.

Menu > General	Description	
Language	Sets the menu screen to the desired language.	
SMART ENERGY SAVING	**High**	Saves energy using the high-efficiency SMART ENERGY SAVING feature.
	Low	Saves energy using the low-efficiency SMART ENERGY SAVING feature.
	Off	Disables the SMART ENERGY SAVING feature.
Power LED	Turns the power LED on the front of the monitor on or off.	
	On	The power LED turns on automatically.
	Off	The power LED turns off.
Automatic Standby	Feature that automatically turns off the monitor when there is no movement on the screen for a period of time. You can set a timer for the auto-off function. (Off, 4 H, 6 H, and 8 H)	
DisplayPort 1.2	Enables or disables DisplayPort 1.2. **NOTE** • Be sure to configure this option according to the DisplayPort version supported by your graphics card. Set this option to Disable if your graphics card does not support DisplayPort 1.2.	

Menu > General	Description	
Quick Charge	**Quick Charge** is a feature that rapidly charges the device connected to the USB 3.0 port.	
	On	Enables **Quick Charge**.
	Off	Disables **Quick Charge**.
	NOTE • When **Quick Charge** is set to **On**, data transmission through the USB1/2 port is not available (e.g. connecting your keyboard, mouse, or other USB storage devices to the monitor).	
Buzzer	This feature lets you set the sound generated from Buzzer when your monitor powers on.	
	On	Enables your monitor's **Buzzer**.
	Off	Disables your monitor's **Buzzer**.
OSD Lock	This feature disables the configuration and adjustment of menus.	
	On	Enables **OSD Lock**.
	Off	Disables **OSD Lock**.
	NOTE • All features are disabled except **Brightness**, **Contrast**, **Volume**, **Input** in **Quick Settings**, and **OSD Lock** in **General**..	

-Reset

1 To view the **OSD menu**, press the **joystick button** at the bottom of the monitor and then enter the **Menu**.
2 Go to **Reset** by moving the joystick.
3 Configure the options following the instructions that appear in the bottom right corner.
4 To return to the upper menu or set other menu items, move the joystick to ◀ or pressing (◉ / OK) it.
5 If you want to exit the OSD menu, move the joystick to ◀ until you exit.

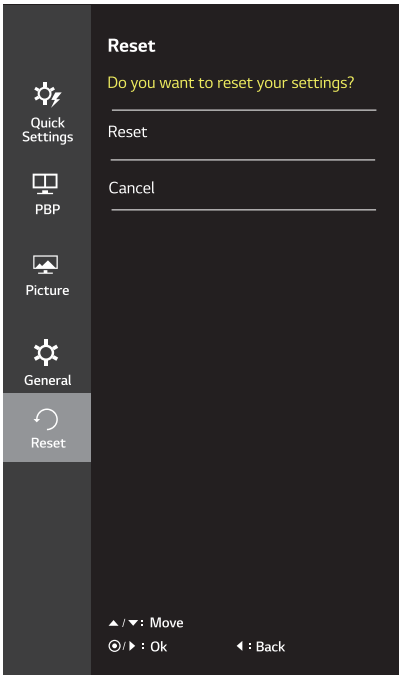

Each option is described below.

Menu > Reset	Description
Do you want to reset your settings?	
Reset	Returns to the default settings.
Cancel	Cancel the select.

TROUBLESHOOTING

Nothing is displayed on the screen.	
Is the monitor's power cord plugged in?	• Check if the power cord is correctly plugged into the power outlet.
Is the power LED on?	• Check the power cable connection and press the power button.
Is the power on and the power LED displaying white?	• Check that the connected input is enabled (Menu > Quick Settings > Input).
Is the power LED blinking?	• If the monitor is in sleep mode, move the mouse, or press any key on the keyboard, to switch the display on. • Check if the computer is turned on.
Is the OUT OF RANGE message being displayed?	• This occurs when signals transferred from the PC (graphics card) are out of the horizontal or vertical frequency range of the monitor. Please see the Product Specification section of this manual to set the appropriate frequency.
Is the No Signal message being displayed?	• This is displayed when the signal cable between the PC and the monitor is missing or disconnected. Check the cable and reconnect it.

The OSD lock message is being displayed.	
Are some functions not avail-able when you press the Menu button?	• The OSD is locked. Go to Menu > General and set OSD Lock to Off.

The screen retains an image.	
Does image sticking occur even when the monitor is turned off?	• Displaying a still image for a prolonged time may cause damage to the screen, resulting in the retention of the image. • To extend the lifetime of the monitor, use a screensaver.

Screen display is unstable and shaky / Images displayed on the monitor leave shadow trails.	
Did you select the appropriate resolution?	• If the selected resolution is HDMI 1080i 60/50 Hz (interlaced), the screen may be flickering. Change the resolution to 1080P or the recommended resolution.

PC(or USB host device) cannot detect USB peripheral connected to USB-A port.	
Did you change the OSD Menu “Quick Charge” off?	• When set “Quick Charge” On, device will be charged quickly, but cannot use USB data. • When Set “Quick Charge” Off, device will be charged slowly, and can use USB data.

NOTE

- **Vertical frequency** In order to display an image, the screen must be refreshed dozens of times per second, like a fluorescent lamp. The number of times the screen is refreshed per second is called vertical frequency, or refresh rate, and is represented by Hz.
- **Horizontal frequency** The time it takes to display one horizontal line is called the horizontal cycle. If 1 is divided by the horizontal interval, the result is the number of horizontal lines displayed per second. This is called horizontal frequency and is represented by kHz.

NOTE

- Check if the graphics card's resolution or frequency is within the range allowed by the monitor and set it to the recommended (optimal) resolution in **Control Panel > Display > settings**.
- Not setting the graphics card to the recommended (optimal) resolution may result in blurred text, a dimmed screen, a truncated display area, or misalignment of the display.
- The setting methods may be different depending on the computer or operating system, and some resolutions may not be available depending on the performance of the graphics card. If this is the case, contact the manufacturer of the computer or graphics card for assistance.
- Some graphics cards may not support 3840x2160 resolution. If the resolution cannot be displayed, contact the manufacturer of your graphics card.

The display color is abnormal.	
Does the display appear discol-ored (16 colors)?	• Set the color to 24 bit (true color) or higher. In Windows, go to Con-trol Panel > Display > Settings > Color Quality.
Does the display color appear unstable or monochrome?	• Check if the signal cable is connected properly. Reconnect the cable or reinsert the PC's graphics card.
Are there spots on the screen?	• When using the monitor, pixilated spots (red, green, blue, white, or black) may appear on the screen. This is normal for an LCD screen. It is not an error, nor is it related to the monitor's performance.

Do you see an "Unrecognized monitor, Plug&Play (VESA DDC) monitor found" message?	
Have you installed the display driver?	• Be sure to install the display driver from our web site: *http://www.lg.com*. • Make sure to check if the video card supports Plug&Play function.

No sound from the headphone port or speaker.	
Are images displayed using DisplayPort or HDMI input without sound?	• Try increasing the volume using the button on the monitor. • Set the audio output of the PC to the monitor you are using. On Microsoft Windows, go to Control Panel > Hardware and Sound > Sound > set the monitor as default device.

SPECIFICATIONS

27UD88

LCD Screen	Type	TFT (Thin Film Transistor) LCD (Liquid Crystal Display) Screen	
	Pixel Pitch	0.1554 mm x 0.1554 mm	
Resolution	Maximum Resolution	3840 x 2160 @ 60 Hz	
	Recommended Resolution	3840 x 2160 @ 60 Hz	
Video Signal	Horizontal Frequency	30 kHz to 135 kHz	
	Vertical Frequency	56Hz to 61 Hz	
Input Connector	HDMI IN1, HDMI IN2 , DP(DisplayPort) IN, H/P ,USB-C,USB(SS) 1, 2		
Power	Voltage	19 V ⎓ 6.5 A	
	Power consumption (Typ.)	On mode: 47.8 W Typ. (Outgoing condition) * Sleep Mode ≤ 1.2 W (HDMI / DP input Condition)** Off Mode ≤ 0.3 W	
AC/DC adaptor	Type LCAP31, LIEN CHANG ELECTRONIC ENTERPRISE production Output: 19 V ⎓ 7.37 A		
Environmental Conditions	Operating Conditions	Temperature	0 °C to 40 °C
		Humidity	Less than 80 %
	Storing Condition	Temperature	-20 °C to 60 °C
		Humidity	Less than 85 %
Stand Angle Adjustment	Forwards/Backwards: -3° to 20° (Head)		
Dimension	Monitor Size (Width x Height x Depth)		
	With Stand	615.0 mm x 425.2 mm x 222.6 mm	
	Without Stand	615.0 mm x 365.1 mm x 42.7 mm	
Weight (Without Packaging)	With Stand	6.2 kg	
	Without Stand	4.7 kg	

The specifications are subject to change without notice.

The power consumption level can be different by operating condition and monitor setting.

* The On mode power consumption is measured with LGE test standard (Full White pattern , Maximum resolution).

** In case of USB-C input, the power consumption of Sleep Mode may vary depending on the connected device.

** The monitor goes to the Sleep Mode in a couple of minutes(Max 5 minutes).

Factory Support Mode (Preset Mode, PC)

HDMI

Display Modes (Resolution)	Horizontal Frequency(kHz)	Vertical Frequency(Hz)	Polarity(H/V)	Remarks
640 x 480	31.469	59.94	-/-	
800 x 600	37.879	60.317	+/+	
1024 x 768	48.363	60	-/-	
1152 x 864	54.347	60.05	+/+	
1280 x 720	45	60	+/+	
1280 x 1024	63.981	60.02	+/+	
1600 x 900	60	60	+/+	
1920 x 1080	67.5	60	+/-	
1920 x 2160	133.29	60	+/-	Recommended resolution for PBP
3840 x 2160	67.5	30	+/-	
3840 x 2160	135	60	+/-	When HDMI ULTRA HD Deep Color is set to ON.

DisplayPort/ USB-C

Display Modes (Resolution)	Horizontal Frequency(kHz)	Vertical Frequency(Hz)	Polarity(H/V)	Remarks
640 x 480	31.469	59.94	-/-	
800 x 600	37.879	60.317	+/+	
1024 x 768	48.363	60	-/-	
1152 x 864	54.347	60.05	+/+	
1280 x 720	45	60	+/+	
1280 x 1024	63.981	60.02	+/+	
1600 x 900	60	60	+/+	
1920 x 1080	67.5	60	+/-	
1920 x 2160	133.32	60	+/-	Recommended resolution for PBP
3840 x 2160	66.66	30	+/-	
3840 x 2160	133.32	60	+/-	

HDMI Timing (Video)

Factory support mode (Preset Mode)	Horizontal Frequency(kHz)	Vertical Frequency(Hz)	Remarks
480p	31.5	60	
720p	45.0	60	
1080p	67.5	60	
2160p	135	60	When HDMI ULTRA HD Deep Color is set to ON.

Power LED

Mode	LED Color
On Mode	White
Sleep Mode	Flashing White
Off Mode	Off

To obtain the source code under GPL, LGPL, MPL, and other open source licenses, that is contained in this product, please visit http://opensource.lge.com.In addition to the source code, all referred license terms, warranty disclaimers and copyright notices are available for download.LG Electronics will also provide open source code to you on CD-ROM for a charge covering the cost of performing such distribution (such as the cost of media, shipping, and handling) upon email request to opensource@lge.com. This offer is valid for three (3) years from the date on which you purchased the product.

This device meets the EMC requirements for home appliances (Class B) and is intended for home usage. The model and serial number of the product are located on the back and on one side of the product.
Record them below in case you ever need service.

MODEL _____

SERIAL _____