Scan the QR code to see the manual.

OWNER'S MANUAL

FRIDGE & FREEZER

Before beginning installation, read these instructions carefully. This will simplify installation and ensure that the product is installed correctly and safely. Leave these instructions near the product after installation for future reference.

ENGLISH

MFL05896605
Rev.01_091626

www.lg.com

Copyright © 2026 LG Electronics. All Rights Reserved

TABLE OF CONTENTS

This manual may contain images or content that may be different from the model you purchased.

This manual is subject to revision by the manufacturer.

SAFETY INSTRUCTIONS

READ ALL INSTRUCTIONS BEFORE USE 4
WARNING 4
CAUTION 10

INSTALLATION

Before Installation 12
Removing the Fridge Door and Freezer Drawer 13
Connecting the Water Line 19
Levelling and Door Alignment 21
Turning on the Power 23
Moving the Appliance for Relocation 23

OPERATION

Before Use 25
Product Features 28
Control Panel 32
Ice and Water Dispenser 35
Automatic Icemaker 37
InstaView 41
Drawer 41
Full-Convert Drawer 42
Shelf 43
Door Basket 45

SMART FUNCTIONS

LG ThinQ Application 46
Smart Diagnosis 48

MAINTENANCE

Cleaning 49
Water Filter 50
Air Filter 52

TROUBLESHOOTING

Before Calling for Service.....54

APPENDIX

CARING FOR THE ENVIRONMENT.....62

SAFETY INSTRUCTIONS

READ ALL INSTRUCTIONS BEFORE USE

The following safety guidelines are intended to prevent unforeseen risks or damage from unsafe or incorrect operation of the appliance.

The guidelines are separated into **'WARNING'** and **'CAUTION'** as described below.

Safety Messages

⚠	This symbol is displayed to indicate matters and operations that can cause risk. Read the part with this symbol carefully and follow the instructions in order to avoid risk.
⚠	**WARNING** This indicates that the failure to follow the instructions can cause serious injury or death.
⚠	**CAUTION** This indicates that the failure to follow the instructions can cause the minor injury or damage to the product.

WARNING

⚠ WARNING

To reduce the risk of explosion, fire, death, electric shock, injury or scalding to persons when using this product, follow basic precautions, including the following:

Technical Safety

- This appliance can be used by children aged from 8 years and above and persons with reduced physical, sensory or mental capabilities or lack of experience and knowledge if they have been given supervision or instruction concerning use of the appliance in a safe way and understand the hazards involved. Children shall not play with the

appliance. Cleaning and user maintenance shall not be made by children without supervision.

- This appliance is not intended for use by persons (including children) with reduced physical, sensory or mental capabilities, or lack of experience and knowledge, unless they have been given supervision or instruction concerning use of the appliance by a person responsible for their safety. Children should be supervised to ensure that they do not play with the appliance.
- Children aged from 3 to 8 years are allowed to load and unload refrigerating appliances.
- This appliance is intended to be used in household and similar applications such as:
  - staff kitchen areas in shops, offices and other working environments;
  - farm houses and by clients in hotels, motels and other residential type environments;
  - bed and breakfast type environments;
  - catering and similar non-retail applications.
- This refrigerating appliance is not intended to be used as a built-in appliance.
- This appliance is not for use in portable or mobile installations, such as marine or RV uses, where it will be in motion while operating.

This symbol alerts you to flammable materials that can ignite and cause a fire if you do not take care.

- This appliance contains a small amount of isobutane refrigerant (R600a), but it is also combustible. When transporting and installing the appliance, care should be taken to ensure that no parts of the refrigerating circuit are damaged.
- The refrigerant and insulation blowing gas used in the appliance require special disposal procedures. Consult with service agent or a similarly qualified person before disposing of them.
- Do not damage the refrigerant circuit.

- If the power cord is damaged or the hole of the outlet socket is loose, it must be replaced. Do not use the power cord and contact an authorized service centre in order to avoid a hazard.
- Do not locate multiple portable socket-outlets or portable power supplies at the rear of the appliance.
- Securely plug the power plug in the outlet socket after completely removing any moisture and dust.
- Never unplug the appliance from the power supply by pulling on the power cable. Always grip the power plug firmly and pull straight out from the outlet socket.
- Keep ventilation openings, in the appliance enclosure or in the built-in structure, clear of obstruction.
- Do not store explosive substances such as aerosol cans with a flammable propellant in this appliance.
- Transport the appliance upright only and do not tilt it.
- When positioning the appliance, ensure the supply cord is not trapped or damaged.
- Do not use mechanical devices or other means to accelerate the defrosting process.
- Do not use a hair drier to dry the inside of the appliance or place a candle inside to remove the odours.
- Do not use electrical appliances inside the food storage compartments of the appliance, unless they are of the type recommended by the manufacturer.
- Make sure not to get a body part such as a hand or foot stuck while moving the appliance.
- Disconnect the power cord before cleaning the appliance interior or exterior. Do not spray water or inflammable substances (toothpaste, alcohol, thinner, benzene, flammable liquid, abrasive, etc.) over the interior or exterior of the appliance to clean it. Do not clean the appliance with brushes, cloths or sponges with rough surfaces or which are made of metallic material.
- Only qualified service personnel from LG Electronics service centre should disassemble or repair the appliance.

Risk of Fire and Flammable Materials

- If a leak is detected, avoid any naked flames or potential sources of ignition and air the room in which the appliance is standing for several minutes. In order to avoid the creation of a flammable gas air mixture if a leak in the refrigerating circuit occurs, the size of the room in which the appliance is used should correspond to the amount of refrigerant used. The room must be 1 m^2 in size for every 8 g of R600a refrigerant inside the appliance.
- Refrigerant leaking out of the pipes could ignite or cause an explosion.
- The amount of refrigerant in your particular appliance is shown on the identification plate inside the appliance.

Installation

- This appliance should only be transported by two or more people holding the appliance securely.
- Install the appliance on a firm and level floor.
- Do not install the appliance in a damp and dusty place. Do not install or store the appliance in any outdoor area, or any area that is subject to weathering conditions such as direct sunlight, wind, rain, or temperatures below freezing.
- Do not place the appliance in direct sunlight or expose it to the heat from heating appliances such as stoves or heaters.
- Be careful not to expose the rear of the appliance when installing.
- Install the appliance in a place where it is easy to unplug the power plug of the appliance.
- Be careful not to let the appliance door fall during assembly or disassembly.
- Be careful not to pinch, crush, or damage the power cable during assembly or disassembly of the appliance door.
- Be careful not to point the power plug up or let the appliance lean against the power plug.
- Do not connect a plug adapter or other accessories to the power plug.

- Do not modify or extend the power cable.
- Ensure that the outlet socket is properly grounded, and that the earth pin on the power cord is not damaged or removed from the power plug. For more details on grounding, inquire at an LG Electronics customer information centre.
- This appliance is equipped with a power cord having an equipment-grounding conductor and a grounding power plug. The power plug must be plugged into an appropriate outlet socket that is installed and grounded in accordance with all local codes and ordinances.
- Never start up an appliance showing any signs of damage. If in doubt, consult your dealer.
- Dispose of all packaging materials (such as plastic bags and styrofoam) away from children. The packaging materials can cause suffocation.
- Do not plug the appliance into a multi socket adapter which does not have a power cable (mounted).
- The appliance should be connected to a dedicated power line which is separately fused.
- Do not use a multi socket outlet which is not properly grounded (portable). In case of using a properly-grounded multi socket outlet (portable), use the multi socket outlet with the current capacity of the power cord rating or higher and use the multi socket outlet only for the appliance.

Operation

- Do not use the appliance for any purpose (storage of medical or experimental materials or shipping) other than any domestic household food storage use.
- If water penetrates electrical parts of the appliance, disconnect power plug and contact an LG Electronics customer information centre.
- Unplug the power plug during a severe thunderstorm or lightning or when not in use for a long period of time.

- Do not touch the power plug or the appliance controls with wet hands.
- Do not bend the power cable excessively or place a heavy object on it.
- Immediately unplug the power plug and contact an LG Electronics customer information centre if you detect a strange sound, odour, or smoke coming from the appliance.
- Do not place hands or metallic objects inside the area emitting the cold air, cover or heat releasing grille on the back.
- Do not apply excessive force or impact to the back cover of the appliance.
- Be careful of nearby children when you open or close the appliance door. The door may bump the child and cause injury.
- Avoid the danger of children getting trapped inside the appliance. A child trapped inside the appliance can cause suffocation.
- Do not put animals, such as pets into the appliance.
- Do not place heavy or fragile objects, containers filled with liquid, combustible substances, flammable objects (such as candles, lamps, etc.), or heating devices (such as stoves, heaters, etc.) on the appliance.
- Do not place any electronic appliance (such as heater and mobile phone) inside the appliance.
- If there is a gas leakage (isobutane, propane, natural gas, etc.), do not touch the appliance or power plug and ventilate the area immediately. This appliance uses a refrigerant gas (isobutane, R600a). Although it uses a small amount of the gas, it is still combustible gas. Gas leakage during appliance transport, installation or operation can cause fire, explosion or injury if sparks are caused.
- Do not use or store flammable or combustible substances (ether, benzene, alcohol, chemical, LPG, combustible spray, insecticide, air freshener, cosmetics, etc.) near the appliance.
- This appliance incorporates an earth connection for functional purposes.
- Connect to potable water supply only.

- If connected to a water supply, connect to a potable water supply only.
- Fill with potable water only.
  - If using an icemaker or dispenser water tank, make sure to fill it with potable water only.

Disposal

- When discarding the appliance, remove the door gasket while leaving the shelves and baskets in place and keep children away from the appliance.

CAUTION

⚠ CAUTION

To reduce the risk of minor injury to persons, malfunction, or damage to the product or property when using this product, follow basic precautions, including the following:

Installation

- After unpacking, check the appliance for any damage that may have occurred during transit.
- Wait for at least 3 to 4 hours in order to ensure the refrigerant circuit is fully efficient.
- Move the appliance carefully on sensitive floors to avoid damage to the floor.

Operation

- Do not touch frozen food or the metal parts in the freezer compartment with wet or damp hands. It may cause frostbite.
- Do not place glass containers, bottles or cans (especially those containing carbonated drinks) in the freezer compartment, shelves or ice bucket that will be exposed to temperatures below freezing.

- The tempered glass on the front side of the appliance door or the shelves can be damaged by an impact. If it is broken, do not touch it with hands.
- Do not hang from the appliance doors, storage room, shelf or climb up into it.
- Do not store an excessive amount of water bottles or containers for side dishes on the door baskets.
- Do not open or close the appliance door with excessive force.
- If the hinge of the appliance door is damaged or operates improperly, stop using the appliance and contact an authorized service centre.
- Prevent animals from nibbling on the power cable or water hose.
- Never eat frozen foods immediately after they have been taken out in the freezer compartment.
- Make sure not to get a hand or foot stuck upon opening or closing the appliance door or door in door.

Maintenance

- This appliance is equipped with maintenance-free LED interior light. Do not remove cover or LED lamp in any attempt to repair or change it. Contact an LG Electronics customer information centre.
- Do not clean glass shelves or covers with warm water when they are cold. They may shatter if exposed to sudden temperature changes.
- Do not insert the shelves upside down. The shelves may fall.
- To remove frost from the appliance, contact an LG Electronics customer information centre.
- Dispose of the ice inside the ice bucket in the freezer compartment during an extended power outage.

INSTALLATION

Before Installation

Dimensions and Clearances

Too small of a distance from adjacent items may result in the degradation of freezing capability and increased electricity costs. Allow over 50 mm of clearance between the back of the appliance and the wall when installing the appliance.

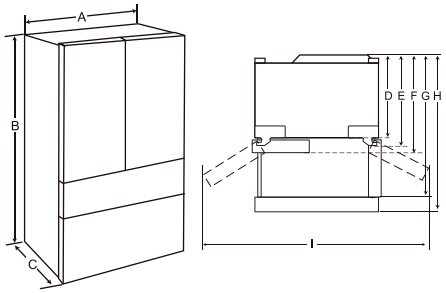

-	Size (mm)	
	Type 1	Type 2
A	835	914
B	1 860	1 860
C	696	696
D	630	630
E	685	685
F	696	696
G	1 069	1 107
H	1 094	1 094
I	1 080	1 155

NOTE

- You can determine what type of appliance it is by looking at the label inside the appliance.

Ambient Temperature

- The appliance is designed to operate within a limited range of ambient temperatures, depending on the climate zone.
- The internal temperatures could be affected by the location of the appliance, the ambient temperature, the frequency of door opening and so on.
- The climate class can be found on the rating label.

Climate Class	Ambient Temperature Range °C
SN (Extended Temperate)	+10 - +32
N (Temperate)	+16 - +32
ST (Subtropical)	+16 - +38 / +18 - +38**
T (Tropical)	+10 - +43* / +16 - +43 / +18 - +43**

* Australia, India, Kenya

** Argentina

NOTE

- The appliances rated from SN to T are intended to be used at an ambient temperature between 10 °C and 43 °C.

Accessories

*1 This feature is only available on some models.

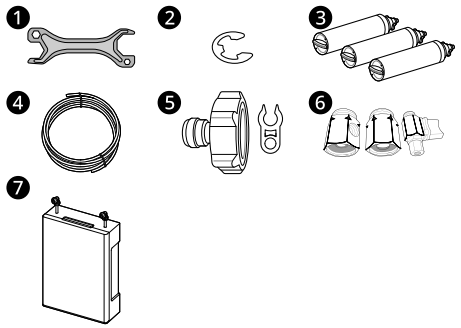

❶ Spanner*1

❷ C-Clip (Snap Ring)*1

❸ Water Filter*1

❹ Water Tube*1

❺ Tube Connector and Clip*1

❻ Tube Connector and Valve*1

❼ Water Filter Case*1

Removing the Fridge Door and Freezer Drawer

If your entrance door is too narrow for the appliance to pass through, remove the appliance doors and pass the appliance laterally.

⚠ WARNING

- Disconnect the power cord, house fuse or circuit breaker before installing, removing the doors, or cleaning the appliance. Failure to follow these instructions may result in death, fire or electric shock.

Removing the Hinge Cover

Remove the screws from the hinge cover at the top of the appliance. Lift the hook (not visible), located at the bottom of the front side of the cover with a flat-head screwdriver.

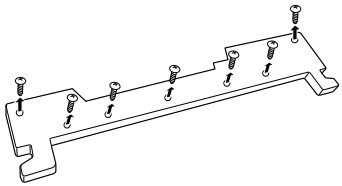

Removing the Left Fridge Door

1 The water supply line is connected to the top right part at the back of the appliance. Hold the water supply connection and gently push down on the collet ❶ to detach the water supply line then unscrew the plastic tube cover for easy tube removal. When refitting the door ensure that the supply line in firmly pushed in all the way so that only one black line can be seen on the pipe. Failure to do so could cause a major water leak.

- Connections may vary by model.
- Type A*1

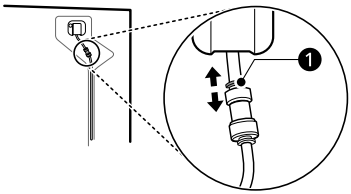

- Type B*1

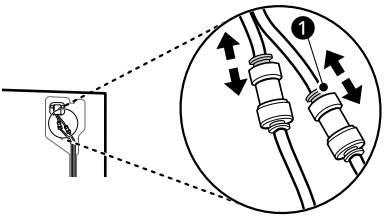

*1 This feature is only available on some models.

NOTE

- Disassembling/Assembling the Water Lines

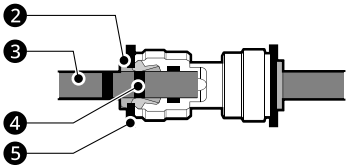

❷ Collet ❸ Tube ❹ Insert line ❺ Clip

2 Pull out the water supply lines ❻. Disconnect all the wire harnesses ❼. Unscrew the ground wire ❽.

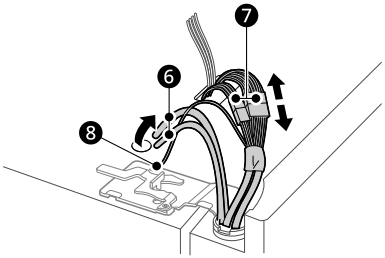

NOTE

- The number of water supply lines may vary depending on the model.

3 Rotate the hinge lever ❾ counterclockwise. Lift the top hinge ❿ free of the hinge lever latch ⓫.

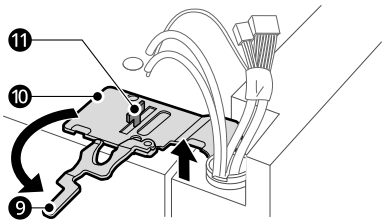

⚠ CAUTION

- When lifting the hinge free of the latch, be careful that the door does not fall forward.

4 Lift the door from the middle hinge pin and remove the door.

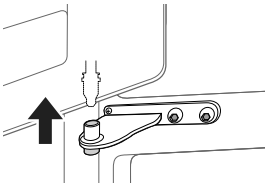

⚠ CAUTION

- Place the door, inside facing up, on a nonscratching surface.

Removing the Right Fridge Door

1 Disconnect all wire harnesses ❶.

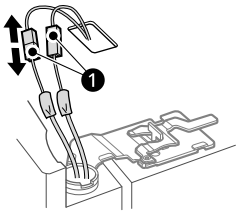

NOTE

- The number of wire harnesses may vary depending on the model.

2 Rotate the hinge lever ❷ clockwise. Lift the top hinge ❸ free of the hinge lever latch ❹.

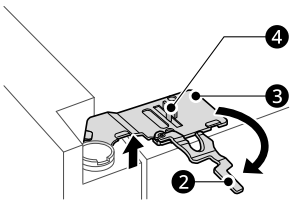

⚠ CAUTION

- When lifting the hinge free of the hinge lever latch, be careful that the door does not fall forward. It is recommended that two or more people carry out the door removal and refitting.

3 Lift the right fridge door until it is free of the middle hinge assembly.

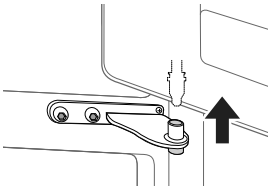

⚠ CAUTION

- Place the door on a non-scratching surface with the inner side facing up.

Removing the Full Convert Drawer

1 Pull the drawer open to full extension.

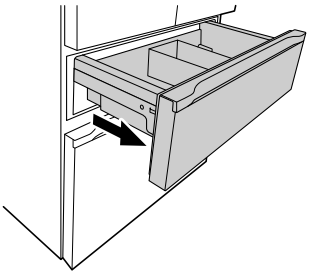

2 Gently lift and pull out the basket

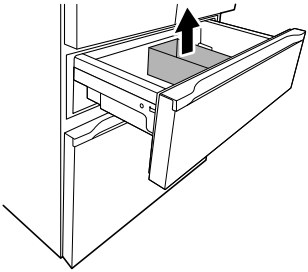

3 Remove the basket by lifting the basket from drawer.

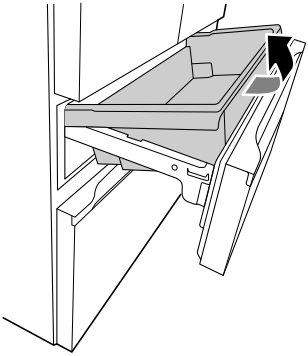

4 Grip both sides of the drawer and pull it up to remove it from the rails.

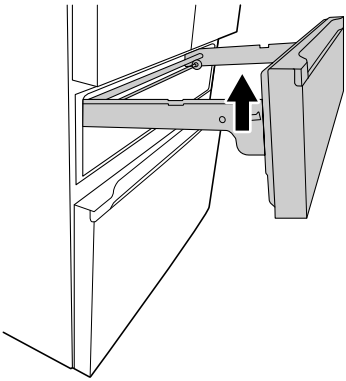

Removing the Freezer Drawer

Type A

1 Pull the drawer open to full extension.

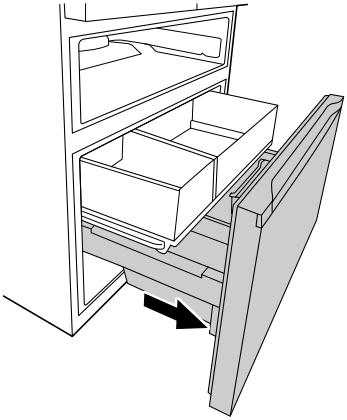

2 Gently lift and pull out both drawers.

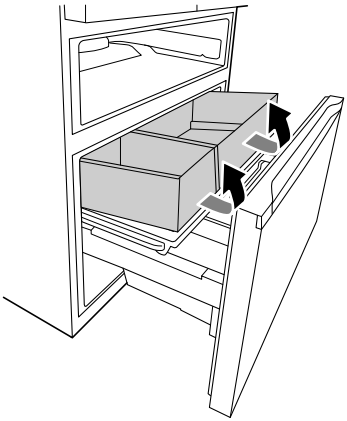

3 Lift the front of the drawer guide up, then pull it straight out.

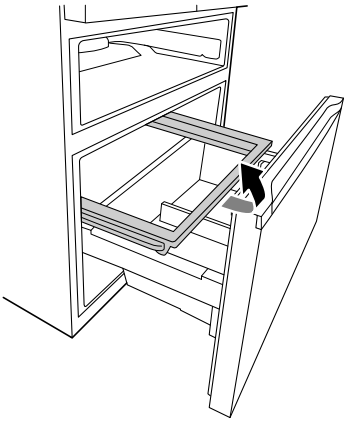

4 Gently lift and pull out both baskets.

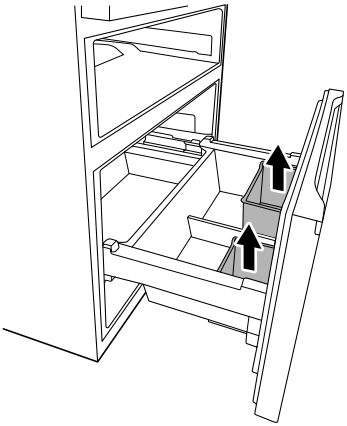

5 Remove the basket by lifting the basket from the freezer drawer.

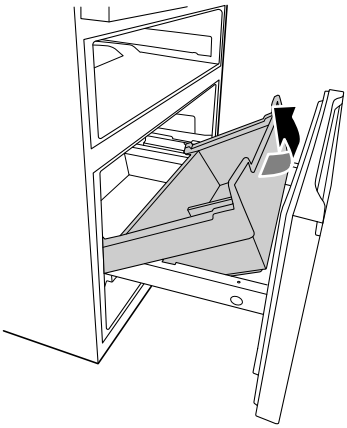

6 Push the button and disengage the stopper on either side.

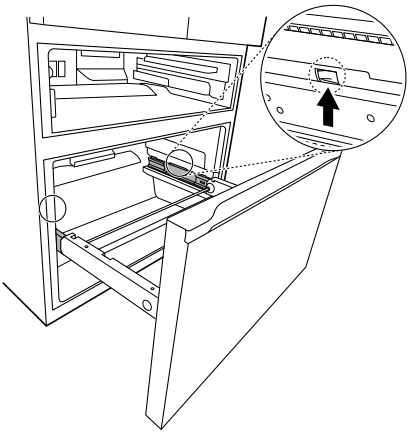

7 Remove the drawer by pulling out the drawer from the rails.

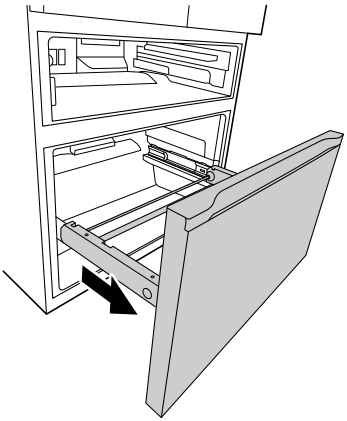

Type B

1 Pull the drawer open to full extension.

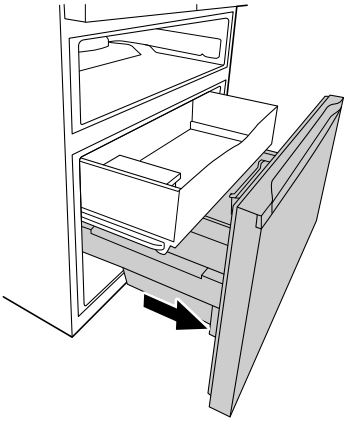

2 Gently lift and pull out the Icemaker.

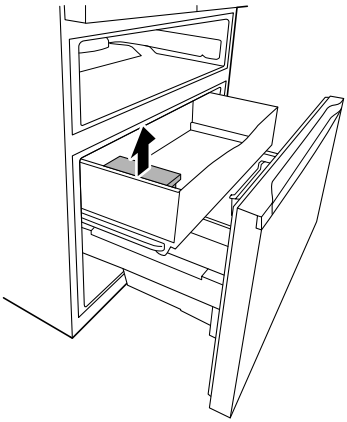

3 Lift the front of the drawer up, then pull it straight out.

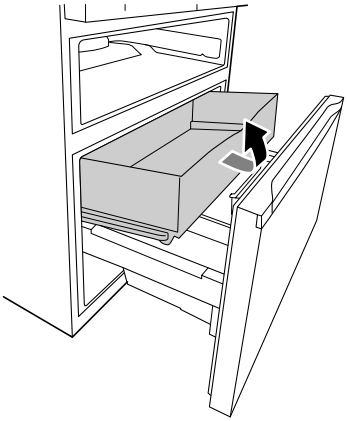

4 Gently lift and pull out the basket

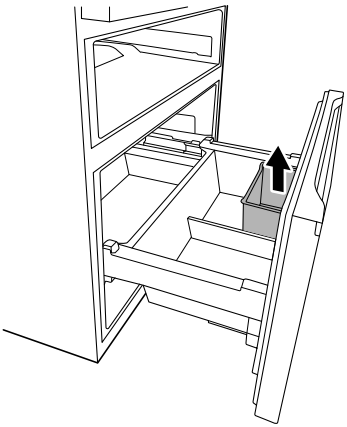

5 Remove the basket by lifting the basket from the freezer drawer.

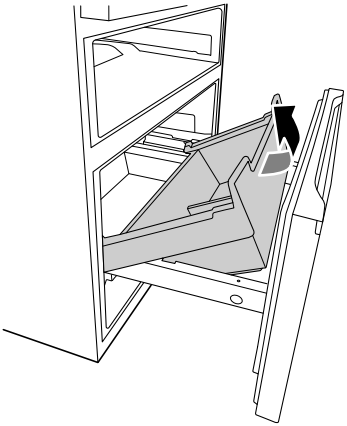

6 Push the button and disengage the stopper on either side.

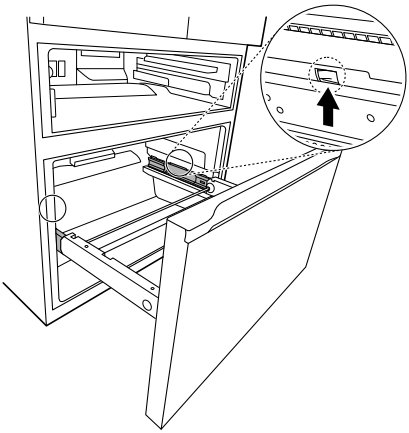

7 Remove the drawer by pulling out the drawer from the rails.

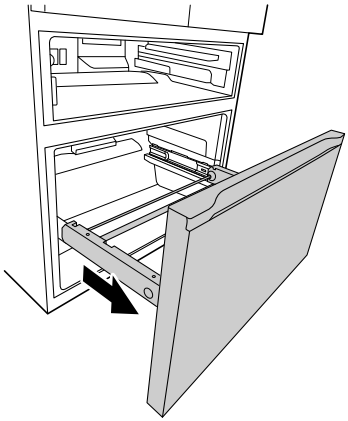

Refitting the Fridge and Freezer Door

Refit the doors in the reverse sequence of their removal once the appliance has been passed through all access doors.

⚠ CAUTION

- Install the right fridge door first.

NOTE

- Disassembling/Assembling the water lines.

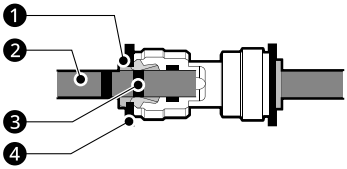

❶ Collet ❷ Tube ❸ Insert line ❹ Clip

- Gently insert the tube until only one of the tube's lines is visible. Pull on the tube to make sure that it is tightly fastened.

Correct	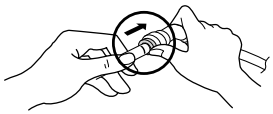
Incorrect	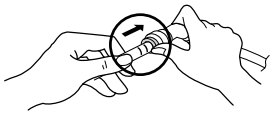

- If the water tube end is damaged, it should be trimmed to ensure it does not leak when refitted.

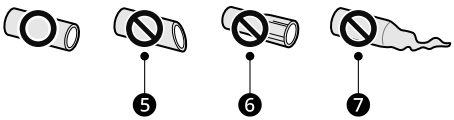

❺ Not straight ❻ Damaged ❼ Stretched

Connecting the Water Line

This feature is only available on some models.

Water Supply Requirements

Connect the appliance to a cold water supply with a maximum inlet water pressure not exceeding 1.0 MPa. A water pressure between 138 kPa and 827 kPa is recommended for the optimal operation of

the water dispenser. If the refrigerator is installed in an area with high water pressure (above 872 kPa), a pressure-reducing valve must be installed. If the refrigerator is installed in an area with low water pressure (below 138 kPa), you can install a booster pump to compensate for the low pressure. Contact a plumber if unsure how to check your water pressure.

If a reverse osmosis water filtration system is connected to your cold water supply, the water pressure to the reverse osmosis system needs to be a minimum of 138 kPa.

⚠ WARNING

- Unplug the appliance before carrying out any work on connecting the water line. Failure to do so may cause electric shock.
- Only connect the water line to a cold water supply. Failure to do so may cause the water filter to malfunction. Water hammer (water banging in the pipes) in house plumbing can cause damage to appliance parts and can lead to water leakage or flooding.
- Connect to potable water supply only.
- Connecting the water line must only be installed by a qualified plumber and in accordance with local legislation and regulations governing water quality.

NOTE

- This water line installation is not covered by the appliance warranty.

Connecting to the Water Filter

This feature is only available on some models.

1 Connect the installation tube to the inlet water port ❶.

2 Connect the tube to the outlet water port ❷, and on the other side, connect to the product.

Refer to the instructions below for connecting the product.

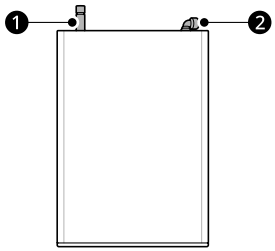

Connecting Water to the Appliance

1 Unscrew the metal threaded collar nut at the back of the appliance and place it over one end of the water tube.

2 Firmly push the water tube onto the water inlet valve and tighten up the collar nut.

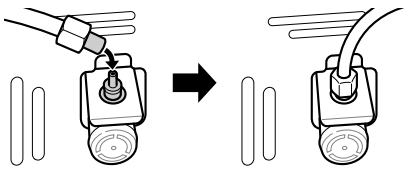

Connecting to the Water Tap

This feature is only available on some models.

1 Push the water tube into the hole of the tap connector supplied in the accessories. The pipe should be held firmly whilst the connector is pushed onto the pipe.

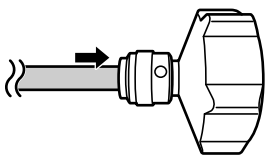

2 Ensure that the rubber washer is fitted to the inside of the tap connector before screwing it onto the tap.

- A separate connector or adaptor may need to be purchased if your tap fitting does not match the thread size of the connector provided.

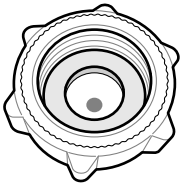

NOTE

Only For Germany

- Connect your appliance only to a water tap with a safety device (according to EN 1717) to avoid drinking water pollution through water backflow.
- To be sure, please ask your installer. In case water tap is without backflow prevention valve (according to EN 1717), you have to use an extra backflow prevention valve compliant with German drinking water ordinance between water tap and water inlet hose.

Checking the Water Connection

1 Turn on the water supply and switch on the appliance. Carefully check all fittings for possible leaks due to poorly fitted hoses.

2 Press and hold the **Water Filter** button for three seconds. The new water filter has been activated.

3 Place a cup under the water dispenser to verify that water is flowing through the appliance.

4 Check the connecting tube and joints for leaks once again.

Levelling and Door Alignment

Before Beginning

When the appliance doors appear to be uneven, follow the instructions below to align the doors.

NOTE

- The spanner may differ depending on the model. You will be provided with one of the available spanners.
  - Spanner Type A

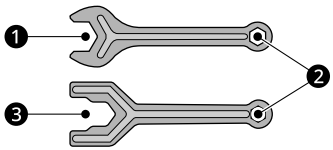

  - Spanner Type B

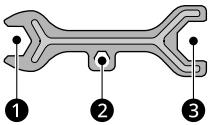

  - Spanner Type C

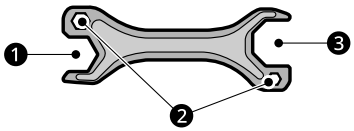

  - Spanner Type D

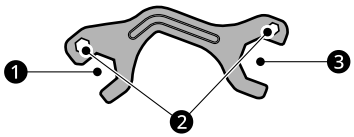

Levelling the Appliance

The appliance has two front levelling legs. Adjust the legs to alter the tilt from front-to-back or side-to-side. If the appliance seems unsteady, or the doors do not close easily, adjust the appliance's tilt using the instructions below:

1 Turn the levelling leg to the left to raise that side of the appliance or to the right to lower it. It may take several turns of the levelling leg to adjust the tilt of the appliance.

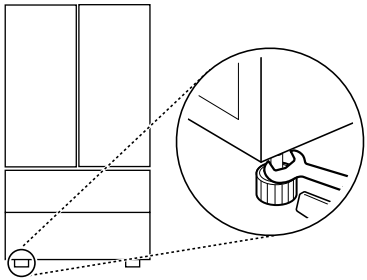

NOTE

- A flare nut wrench works best, but an open-end wrench will suffice. Do not over-tighten.

2 Open both doors and check to make sure that they close easily. If the doors do not close easily, tilt the appliance slightly more to the rear by turning both levelling legs to the left. It may take several more turns, and be sure to turn both levelling legs the same amount.

Door Alignment for Fridge Door

Left Fridge Door
If the space between the doors is uneven, follow the instructions below to align the left door:

1 Lift the left door up.

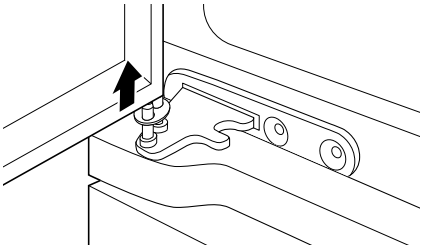

2 Use a pair of long nose pliers to insert C-Clips ❶ under the door hinge's washer ❷ until both doors are level.

- Do not insert three or more C-Clips

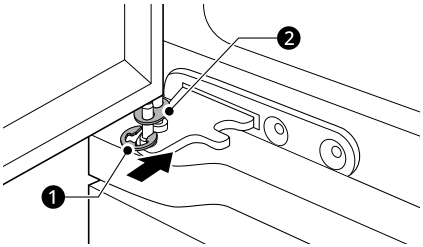

Right Fridge Door
If the space between the doors is uneven, follow the instructions below to align the right door:

1 Lift the right door up.

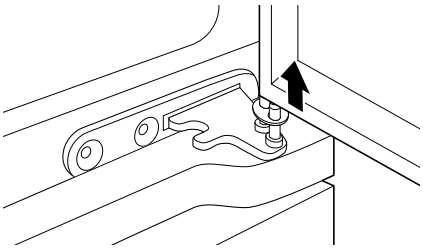

2 Use a pair of long nose pliers to insert C-Clips ❶ under the door hinge's washer ❷ until both doors are level.

- Do not insert three or more C-Clips

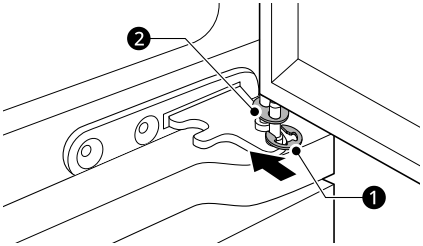

⚠ CAUTION

- The door is heavy. To avoid injury, use two or more people to lift and align the fridge door.
- Small parts are a swallowing hazard for small children. Keep C-Clips out of the reach of children.

Turning on the Power

Connecting the Appliance

To turn on the appliance, connect the power plug into the outlet socket. Do not double up with other appliances on the same outlet.

NOTE

- After connecting the power supply cord (or plug) to the outlet, wait enough time before you put food into the appliance. If you add food before the appliance has cooled completely, your food may spoil. Make sure you have removed any clear protective film where it has been applied to the door.
- To turn off the appliance, disconnect the power plug from the outlet socket.

Moving the Appliance for Relocation

Moving the Appliance

1 Remove all food from inside the appliance.

2 Fix the power plug.

- Models with a power plug hook:

  Pull the power plug out, insert and fix it into the power plug hook at the rear or on top of the appliance.
- Models without a power plug hook:

  Pull the power plug out and fix the power supply cable with a tape to the side of the appliance where the power socket is located at the installation site.

3 Tape parts such as shelves and the door handle to prevent from falling off while moving the appliance.

4 Move the appliance with more than two people carefully. When transporting the appliance over a long distance, keep the appliance upright.

⚠ CAUTION

- Move the appliance carefully on sensitive floors to avoid damage to the floor.
  - Use cardboard, floor mat or carpet to prevent scratches on the floor when installing or moving the appliance.

⚠ CAUTION

- Do not move the appliance in zigzags.

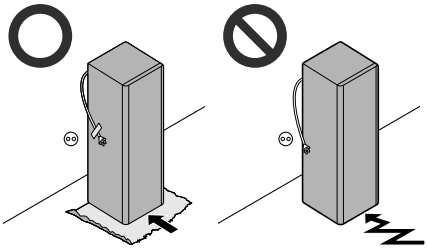

5 After installing the appliance, connect the power plug into a mains outlet socket and switch it on.

OPERATION

Before Use

Notes for Operation

- Users should keep in mind that frost can form if the door is not closed completely or if the humidity is high during the summer.
- Ensure there is sufficient space between food stored on the shelf or door basket to allow the door to close completely.
- Opening the door for long periods can cause a significant increase of the temperature in the compartments of the appliance.
- If the refrigerating appliance is left empty for long periods, switch off, defrost, clean, dry, and leave the door open to prevent mould developing within the appliance.
- Note that a temperature rise after defrosting has a permissible range in the appliance specifications. If you wish to minimise the impact on the food storage due to a temperature rise, seal or wrap the stored food in several layers.

Door Open Alarm

This feature is only available on some models.

The alarm sounds if the door is left open or not completely closed.

NOTE

- Contact the LG Electronics customer information centre if the alarm sound continues even after closing all doors.

High Temperature Alarm

This feature is only available on some models.

The high temperature alarm is a function that warns when the temperature of the freezer increases enough to be a problem. A message appears on the control panel and the alarm sounds.

- To stop the alarm sound, press the **Confirm** button.
- This alarm sounds in the following cases:
  - When the appliance is turned on for the first time (therefore the freezer temperature is high).
  - When the freezer door is open for a long time or opens very frequently.
  - When the power goes out for a long period of time.
  - When larger amounts of hot food are placed into the freezer.

Failure Detection

The appliance can automatically detect problems during the operation.

NOTE

- If a problem is detected, the appliance may not operate and an error code is displayed even when any button is pressed.
- If an error code is indicated on the display, do not turn off the power. Immediately contact the LG Electronics customer information centre and report the error code. If you turn off the power, the repair technician from the our information centre may have difficulty finding the problem.

Suggestion for Energy Saving

- For the most efficient use of energy, keep all inner parts (e.g. door baskets, drawers and shelves) on their original location. Altering their positions may result in less efficient energy consumption or performance.
- Ensure there is sufficient space between stored foods. This allows cold air to be circulated evenly and lowers electricity bills.
- Store hot food only after it has cooled in order to prevent dew or frost.

- When storing food in the freezer compartment, set the freezer temperature lower than the temperature indicated on the food.
- Do not set the temperature of the appliance lower than needed.
- Do not put food near the temperature sensor of the fridge compartment. Keep a distance of at least 3 cm from the sensor.

Storing Foods Effectively

- Food may freeze or spoil if stored at the wrong temperature. Set the refrigerator to the correct temperature for the food being stored.
- Store frozen food or refrigerated food inside sealed containers.
- Check the expiration date and label (storage instructions) before storing food in the appliance.
- Do not store food for a long period of time if it spoils easily at a low temperature.
- Do not place unfrozen food in direct contact with food that is already frozen. It could be necessary to reduce the quantity to be frozen if freezing every day is anticipated.
- Place the refrigerated food or frozen food in each fridge or freezer compartment immediately after purchasing.
- Store raw meat and fish in suitable containers in the refrigerator, so that it is not in contact with or drip onto other food.
- Refrigerated foods and other food items can be stored on top of the vegetable drawer.
- Avoid refreezing any food which has been completely thawed. Freezing any food which has been completely thawed again will lower its taste and nutrition.
- Do not overfill the appliance. Cold air can not circulate properly if the appliance is overfilled.
- Cool hot food before storing. If too much hot food is placed inside, the internal temperature of the appliance can increase and negatively affect other foods stored in the appliance.
- If you set an excessively low temperature for food, it may become frozen. Do not set a temperature lower than the required temperature for the food to be stored correctly.
- If there are chill compartments in the appliance, do not store vegetables and fruits with higher moisture content in the chill compartments as they may freeze due to the lower temperature.
- In the event of a blackout, call the electricity company and ask how long it is going to last.
  - You should avoid door openings while the power is off.
  - When the power supply gets back to normal, check the condition of the food.

Maximum Freezing Capacity

- For maximum freezing capacity, set the freezer temperature to the coldest temperature setting.
- **Super Freeze** function will allow the freezer to reach its maximum freezing capacity. This generally takes up to 24 hours and automatically switches off.
- **Super Freeze** must be switched on for 3 hours before fresh products are placed in the freezer compartment.
- To freeze food items quickly, store the food in the upper drawer inside the bottom large drawer. Food items will freeze most quickly in the drawer.
- To get better air circulation, insert all inner parts like baskets, drawers, and shelves.

Freezing the Maximum Amount of Food

If large quantities of food are to be stored, all the freezer drawers should be taken out of the appliance except the bottom one and the food should be stacked directly on the freezer compartment.

⚠ CAUTION

- To remove the drawers, first remove the food from drawers and then pull out the drawers carefully. Not doing so could cause injury or damage to the drawers.

NOTE

- The shape of each drawer may be different, insert in the right position.

Two Star Compartment

This feature is only available on some models.

- Two star (**) basket or drawer can be used to store ice and food from -12 °C to -18 °C for short periods.
- Two star frozen food compartments are suitable for storing pre-frozen food, storing or making icecream and making ice cubes.
- Two star compartments are not suitable for the freezing of fresh food.
- The number of freezer door baskets and freezer drawers with two star sections may vary depending on the model purchased.

Product Features

The appearance or components of the appliance may differ from model to model.

Exterior

*1 This feature is only available on some models.

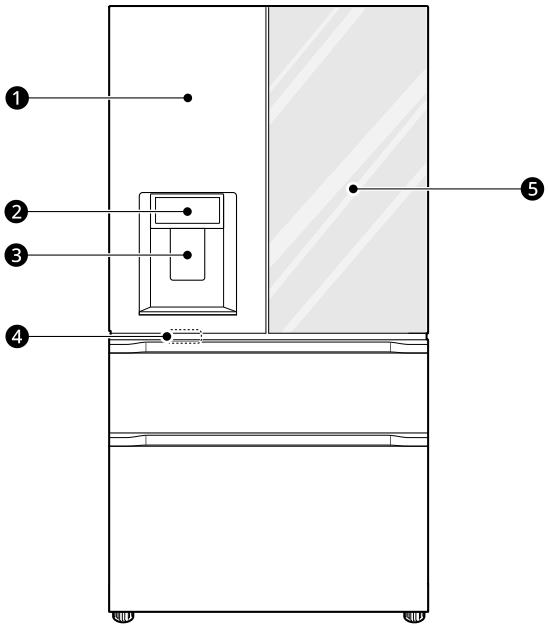

❶ **Fridge**

Fresh food compartment

❷ **Control Panel***1

Sets the refrigerator temperature and freezer temperature, the water filter condition and the dispenser mode.

❸ **Filtered Water and Ice Dispenser***1

Dispenses purified water and ice.

❹ **Proximity Sensor***1

The LED on the bottom of the fridge doors automatically turns on when you approach the appliance.

❺ **InstaView***1

Knock twice on the glass to turn the LED light inside the **InstaView** on or off.

Interior

*1 This feature is only available on some models.

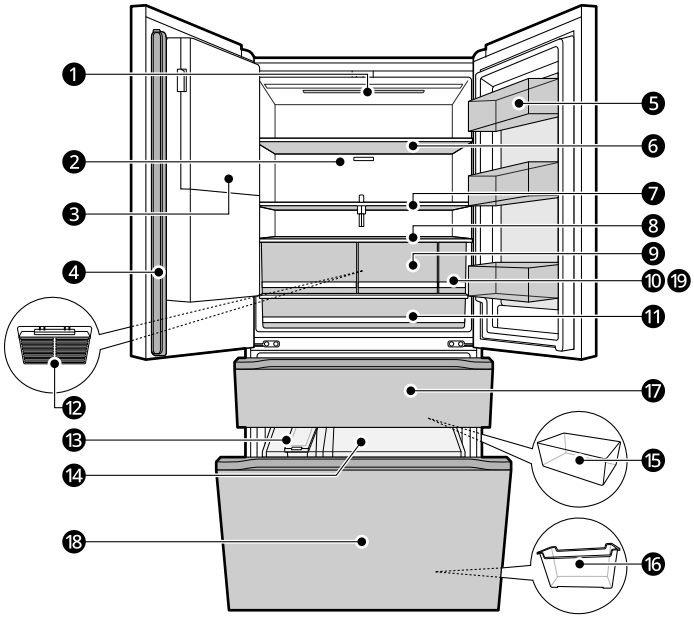

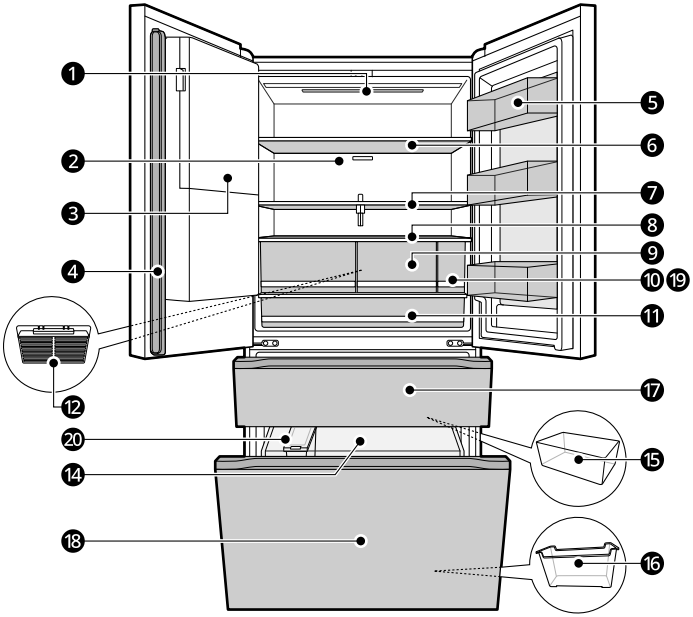

❶ **LED Lamp**

The LED lamps inside the fridge light up when you open the door.

❷ **LED Back Wall Lighting**[*1]

LED back wall lighting covers the back interior wall to illuminate the entire fridge evenly.

❸ **In-Door Icemaker (Fridge)**

This is where ice is automatically produced and stored.

❹ **Door Mullion**

Prevents the cold air of the fridge from leaking.

⚠ CAUTION

- To reduce the risk of scratching the door or breaking the center door mullion, make sure that the refrigerator door mullion is always folded in.

❺ **Fridge Door Basket**

Stores small packages of refrigerated foods, drinks and sauce containers.

❻ **Fridge Shelf**

Stores refrigerated foods and fresh foods.

Stores the foods with higher moisture content at the front of the shelf.

❼ **Folding Shelf**[*1]

This is adjustable to meet individual storage needs.

❽ **Bottom Shelf**

To store a food container that is greater than 1 kg, place it on the bottom shelf.

❾ **Fridge Drawer**

Keeps fruits and vegetables fresh.

❿ **Water tank**[*1]

Stores water for distribution or automatic ice maker.
It is necessary to fill the distribution water tank by hand.

⓫ **Fresh Converter+ Drawer**[*1]

Stores food items at a different temperature than the regular fridge area.

- For more space, you can use chill area without chill compartment drawer.
- The actual number of drawers will differ from model to model.

⓬ **Air Filter**[*1]

Reduces odours inside the fridge compartment.

⓭ **Craft Ice Maker (Freezer)**[*1]

This is where Craft Ice is automatically produced.

⓮ **Pullout Drawer**

Provides extra storage within the freezer compartment.

⓯ **Guide Drawer**[*1]

Stores small food items.

⓰ **Quick Basket**[*1]

Stores small food items.

⓱ **Full-Convert Drawer**

The Full-Convert Drawer provides storage space with a variable temperature control.

⓲ **Freezer**

Frozen food compartment.

⓳ **Water Filter**[*1]

This filter purifies water.

NOTE

- This filter should be replaced every 6 months.

⓴ **Ice Maker (Freezer)**[*1]

This is where ice is manually produced and stored.

Control Panel

The actual control panel may differ from model to model.

Control Panel and Functions

*1 This feature is only available on some models.

Refrigerator Control Panel

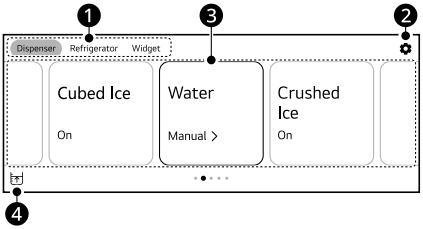

❶ **Navigation Buttons**

Press the button to select **Dispenser**, **Refrigerator**, or **Widget** mode.

❷ **Settings Button**

Press the button to set up the features of the fridge.

❸ **Body**

The main contents are displayed in the form of menu cards.

❹ **Quick Fill Button**

Press the button to enter the **Quick Fill** settings screen.

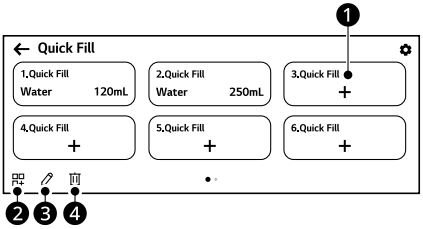

❶ Press the button to set water dispensing capacity.

❷ Press the button to register the water dispensing capacity in the home menu.

❸ Press the button to edit the water dispensing capacity in the home menu.

❹ Press the button to delete the water dispensing capacity in the home menu.

Dispenser Mode

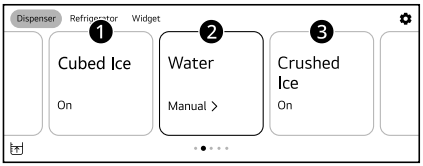

❶ **Cubed Ice**

Press the button to enter the setting mode and turn the function that automatically makes **Cubed Ice** on/off.

❷ **Water**

Press the button to enter the setting mode and set the water dispensing capacity.

❸ **Crushed Ice**

Shows if the **Crushed Ice** function is turned on/off.
This function automatically turns on/off depending on the **Cubed Ice** function.

Refrigerator Mode

Type 1

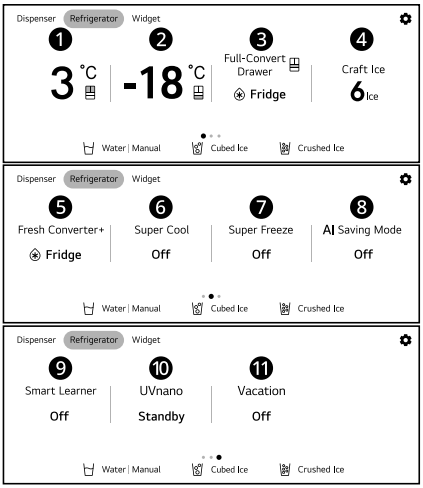

Type 2

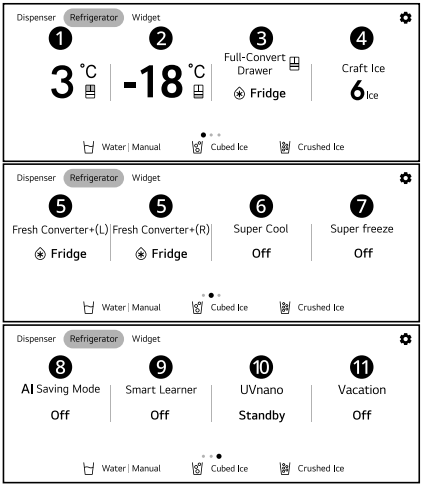

❶ **Fridge Temperature**

Displays the current set temperature of the fridge. The default fridge temperature is 3 ℃. Press the button to select a new set temperature from 1 ℃ to 7 ℃.

❷ **Freezer Temperature**

Displays the current set temperature of the freezer. The default freezer temperature is -18 ℃. Press the button to select a new set temperature from -23 ℃ to -15 ℃.

❸ **Full-Convert Drawer**

Adjust the temperature of the convertible drawer to either colder or warmer than the fridge.

❹ **Craft Ice**[*1]

Set the **Craft Ice** mode to produce 3 or 6 pieces of ice every 24 hours.

❺ **Fresh Converter+**

Set the function of the **Fresh Converter+**.

❻ **Super Cool**

This function can quickly cool foods such as vegetables, fruit, beverages, and more.

❼ **Super Freeze**

This function increases both ice ice production capacity and freezing performance.

❽ **AI Saving Mode**

AI Saving Mode starts automatically based on usage patterns.

❾ **Smart Learner**

Analyzes the area surrounding the appliance and your usage patterns to provide optimized fridge maintenance functions, such as energy saving mode or Cooling mode.

❿ **UV Nano**

UV light is used to keep the water outlet clean. The UV nano function runs automatically for 10 minutes every hour or can be manually activated at any time.

⓫ Vacation

Save energy when you are away for a long time by running your refrigerator and freezer at their lowest settings. Turning on Vacation mode automatically turns off **Super Cool** or **Super Freeze**.

Widget Mode

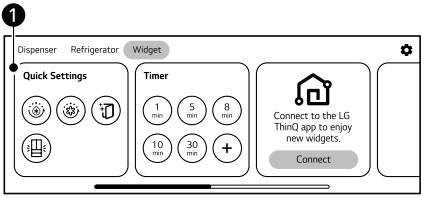

❶ Quick Settings

Press the button to use quick setting function(**Super Freeze**, **Super cool**, etc)

Ice and Water Dispenser

This feature is only available on some models.

Before Using the Ice and Water Dispenser

⚠ CAUTION

- Keep children away from the dispenser to prevent children playing with or damaging the controls.
- Throw away the first few batches of ice (about 20 cubes and 7 cups of water). This is also necessary if the appliance has not been used for a long time.
- Clean the water dispensing system if they have not been used for 48 hours. Flush the water system connected to a water supply if water has not been drawn for 5 days.
- To clean the water dispensing system, flush the water through the dispenser about 5 minutes and throw away the first few batches of ice.
- Do not use a thin crystal cup or chinaware when dispensing water or ice.

NOTE

- If you open the fridge door while water, cubed ice or crushed ice is being dispensed, dispensing will be paused. When you close the door, the selected item will continue to be dispensed.
- If the cup rim is small, water may splash out of the glass or miss it completely.
- Use a cup with a rim of over 68 mm in diameter when dispensing water, cubed ice or crushed ice.
- When the ice maker produces smaller ice cubes, or the cubes become lumped together, the amount of water supplied to the ice maker may be low due to insufficient water in the water tank. If ice is not used frequently or the freezer set temperature is too warm, it may also lump together.
- It is normal for milky / cloudy water to be dispensed after replacing the water filter. This air in the water will eventually clear and is safe to drink during this transition.

Using the Ice and Water Dispenser

1 Select the desired dispenser mode 1. The LED over the selected icon turns on.

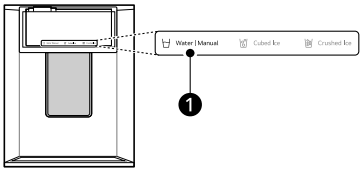

2 Press the dispenser paddle ❷ with a glass or other container to dispense cubed ice, water or crushed ice.

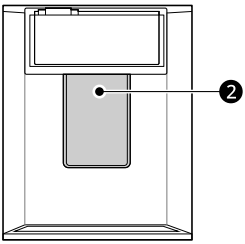

Filling the Water Tank with Water

This feature is only available on some models.

The water tank holds the water to be dispensed or used by the automatic icemaker to make ice.

The water tank must not be filled with anything other than potable water.

1 Remove the water tank by pulling it out while holding the handle.

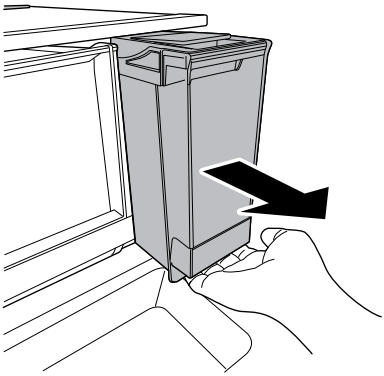

2 Carefully remove the water tank from the left side.

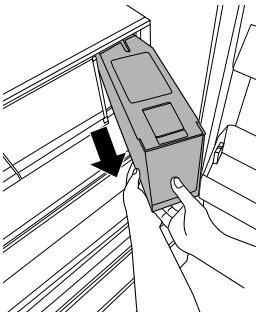

3 Open the cover or cap of the water tank. Fill with bottle filtered or clean filtered water up to the reference line indicated inside the water tank. (Total capacity: 3.8 L)

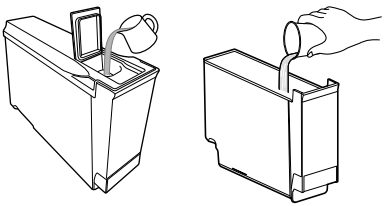

4 After filling with water, close the cover or cap of the water tank. Refit the water tank on the fridge shelf.

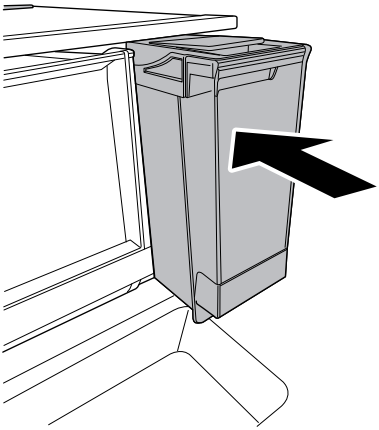

⚠ WARNING

- Fill with potable water only.
- Do not fill the water tank with drinks other than water and never fill with hot water.

⚠ CAUTION

- Make sure to clean the water tank once every 1-2 weeks.
- Do not leave the water tank unwashed for a long period of time.
- Do not continue to use the water tank by refilling it with water without washing it.
- Do not apply excessive force or impact when removing or assembling the water tank. Doing so can cause appliance damage or injury.
- Children should not be allowed near the water tank.

NOTE

- Before using the water tank after installing the appliance, it should be washed before filling it with water.
- Check if the water tank has been placed on the appliance correctly. If it is not assembled correctly, water may leak from the tank into the appliance.
- If there is an insufficient amount of water in the water tank, ice cube size and quantity may be affected and may result in no ice being made.
- If there is no water in the water tank, the cold water and ice dispensing function of the dispenser cannot be used. Check if there is water in the water tank and then fill it with water if there is not.
- Wait at least 15 seconds before removing the water tank after having dispensed water or ice from the dispenser.
- Sound from the water tank will be normal when supplying water to the dispenser and the Automatic Ice Maker. It is not a sign of malfunction.

Automatic Icemaker

This feature is only available on some models.

This feature may vary depending on model purchased.

Before Using the In-Door Icemaker

- The icemaker produces ice normally when approximately 48 hours have passed after the appliance is initially installed.
- If the ice bucket is completely filled with ice, ice production will stop.
- Sound of ice dropping into the ice bucket is normal.
- If ice cubes are stored in the ice bucket for a long period of time, they may clump together and may not be separated easily. In such a case, empty the ice bucket and allow fresh ice to be made.

⚠ CAUTION

- It is normal for milky or cloudy water to be dispensed after replacing the water filter. This air in the water will clear eventually and is safe to drink.

⚠ CAUTION

- The first ice and water dispensed may include particles or odour from the water supply line or the water tank.
- If discoloured ice is dispensed, check the water tank and the water supply for a possible source. If the problem continues, contact the LG Electronics customer information centre. Do not use the ice or water until the problem is corrected.
- Do not touch the ice outlet or the automatic icemaker with your hand or a tool.
- Dispense ice into a glass before filling it with water or other beverages. Splashing will occur if ice is dispensed into a glass that already contains liquid.
- Never use a glass that is exceptionally narrow or deep. Ice may jam in the ice passage, affecting the performance of the appliance.
- Keep the glass at a proper distance from the ice outlet. A glass held too close to the outlet may prevent ice from dispensing.
- Dispose of the ice inside the ice bucket if you go on vacation or if an extended power outage occurs. Water from melting ice may drop from the dispenser onto the floor.
- A container with a very small opening should be held as close to the dispenser as possible to avoid spilling.

In-Door Icemaker

The automatic icemaker can automatically make 70 - 182 cubes within a 24-hour period if conditions are favourable. This amount may vary according to the environment (ambient temperature around the appliance, frequency of the door being opened, amount of food stored in the appliance, etc.).

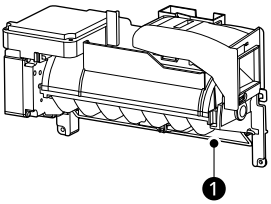

❶ Auto Shutoff (feeler arm)

Before Using the Freezer Icemaker

This feature is only available on some models.

NOTE

- The icemaker begins producing ice approximately 48 hours after the appliance is initially installed.
- Throw away the first few batches of ice after installation.
- The sound of ice dropping into the ice bucket is normal.
- If the ice bucket is completely filled with ice, ice production will stop.
- The amount and shape of ice may vary according to the environment (ambient temperature around the appliance, frequency of the door being opened, amount of food stored in the appliance, water pressure, etc.).
- In the event of a power outage, throw away the ice stored in the ice bucket.

Freezer Icemaker (Craft Ice)

This feature is only available on some models.

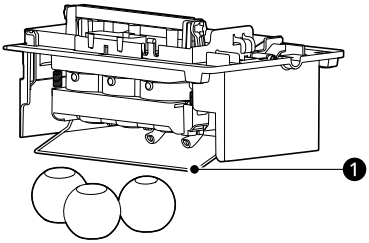

❶ Feeler Arm

⚠ CAUTION

- Do not insert round ice into the in-door ice bucket, as it can damage the ice and water dispenser.

NOTE

- The icemaker begins producing ice approximately 48 hours after the appliance is initially installed. The first batches of ice may not be round and clear.
- Following installation or water filter replacement, the first few batches of ice may be semicircular or contain air bubbles.
- If the water pressure is less than 20 psi (138 kPa) or a reverse osmosis system is used, the shape of the ice may vary.
- The ice may look cloudy depending on the water quality in the installation location and the operating conditions.
- Throw away any shards of ice you may find in the ice bucket, as they may stick to the ice stored in the ice bucket.
- After a short term power outage, it will take longer to make the first batch of ice, and the ice may not be round. If the power will be out for a longer period, throw away the ice stored in the ice bucket.
- The **Craft Ice** icemaker produces 1 batch of round ice (3 pieces) at a time.
- In **3 ICE** mode, the **Craft Ice** icemaker produces 1 batch of round ice (3 pieces) about every 24 hours. In **6 ICE** mode, the **Craft Ice** icemaker produces 2 batches of round ice (6 pieces total) in the same period.
- For more ice, select the **6 ICE** mode. For clearer ice, select the **3 ICE** mode.
- The time needed to make ice may vary according to operating conditions.
- The ice bucket stores 20-30 pieces of round ice.

Using the Freezer Ice Bucket

This feature is only available on some models.

The ice bucket stores ice from the freezer icemaker.

⚠ CAUTION

- The freezer ice bucket must be placed in the correct orientation. Failure to do so can damage the ice bucket and icemaker.

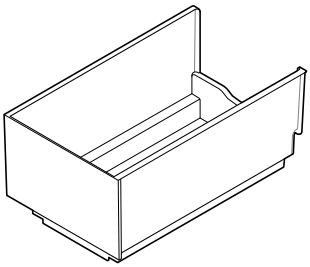

- Remove the ice bucket to create more space inside the freezer if you do not use it.
- The pad on the bottom of the ice bucket is designed to reduce the sound of the ice dropping. Do not remove the pad.

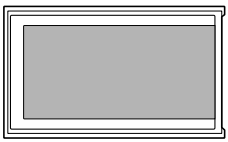

- Clean the pad with water and dry it thoroughly before putting it back in place.

Removing/Refitting the Ice Bucket

The ice dispensing chute may become blocked with frost if only crushed ice is used. Remove the frost that accumulates by removing the ice bucket and clearing the passage with a rubber spatula. Dispensing cubed ice periodically can also help prevent frost buildup.

1 Gently pull the handle to open the ice compartment.

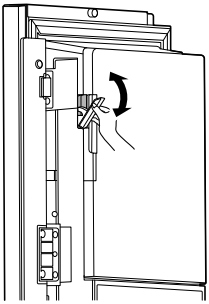

2 To remove the in-door ice bucket, grip the front handle, slightly lift the lower part, and slowly pull out the ice bucket as shown.

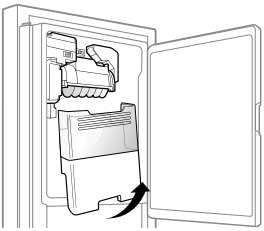

3 Refit the in-door ice bucket in the reverse sequence of their removal.

⚠ CAUTION

- Do not touch the automatic icemaker's mechanical parts with your hand or any mechanical implement. Doing so may cause serious injury or damage to the appliance.
- Do not disassemble, repair or alter the automatic icemaker. These tasks should only be done by a service technician.
- Caution should be taken, as the automatic icemaker operates continuously after the freezer door is opened when the automatic icemaker is set to ON.
- Keep children away from the dispenser.
- When refitting the ice bucket, ensure that it is placed correctly. If it is tilted or unlevel, it may not continue to make ice due to sensor disruption.

Normal Sounds You May Hear

- Keeping the power turned on to the icemaker(s) before the water line is connected can damage the icemaker(s).
- You will hear the sound of ice dropping into the ice bucket and water running in the pipes as the icemaker(s) refills.
- The icemaker water valve buzzes as the icemaker(s) fills with water. If the icemaker(s) is turned on, it will buzz even if it has not yet been hooked up to water. To stop the buzzing:
  - Turn the icemaker(s) off by referring to Control Panel in the **Operation** section.

Preparing for Vacation

Turn the icemaker(s) off and shut off the water supply to the refrigerator. To turn the icemaker(s) off, refer to Control Panel in the **Operation** section.

NOTE

- The ice bucket should be emptied any time the icemaker(s) is turned off.

If the ambient temperature will drop below freezing, have a qualified technician drain the water supply system to prevent serious property damage due to flooding caused by ruptured water lines or connections.

InstaView

This feature is only available on some models.

Using the InstaView

The **InstaView** lets you see if you're running low on frequently used items like beverages and snacks, without opening the fridge door.

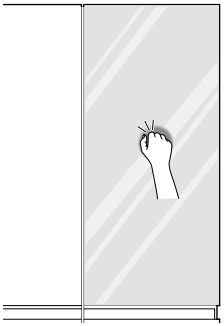

1 Knock twice on the glass to turn the LED light inside the **InstaView** on or off.

2 The LED light turns off automatically after ten seconds.

NOTE

- The **InstaView** function is disabled for 2 seconds after closing the left or right freezer door.
- Knock near the centre of the glass. Knocking near the edges of the glass may not activate the **InstaView** function.
- Knock hard enough so that the knocking sound is audible.
- The **InstaView** function may activate if a loud noise occurs near the refrigerator.
- Clean the glass door with a dry cloth. To remove stubborn stains, slightly moisten a clean cloth with lukewarm water or a glass cleaner. Do not spray glass cleaner directly at the glass door.

Drawer

⚠ CAUTION

- Always empty the drawers before removing them, and use both hands when removing and refitting them.
- Make sure that the fridge doors are fully open before removing and refitting the drawers.

Using the Fresh Converter+

This feature is only available on some models.

This space is used to store meat, fish, cheese and other items that need to be kept chilled.

Refer to **Fresh Converter+** button setting for more information.

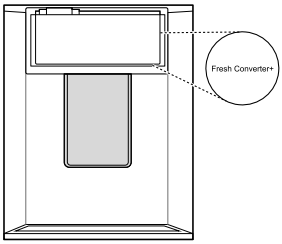

⚠ CAUTION

- Do not place any items on the **Fresh Converter+** drawer cover.

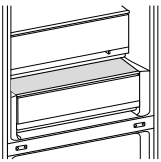

Removing/Refitting the Fridge Drawer

1 Lift the bottom fridge door basket and remove it.

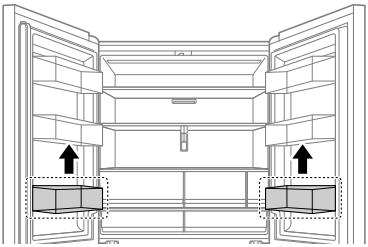

2 Pull the fridge drawer out. Slightly lift the front of the drawer and remove it from the drawer support.

- If you lift the glass slightly, it will be easier to remove.

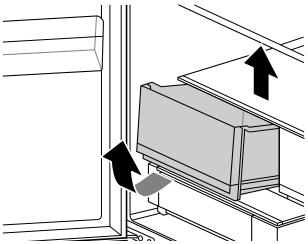

3 To refit the fridge drawer, place it onto the drawer support and push it in until it is fully closed.

4 Refit the bottom fridge door basket.

Removing/Refitting the Fresh Converter+ Drawer

1 Lift the bottom fridge door basket and remove it.

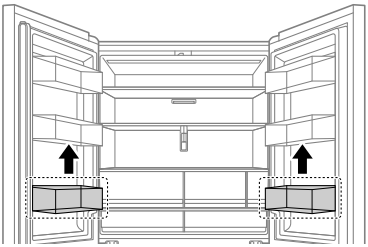

2 Pull the **Fresh Converter+** drawer out. Take it out in a straight line and remove it from the drawer support.

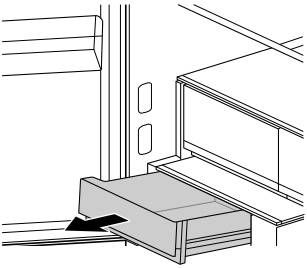

3 To refit the **Fresh Converter+** drawer, place it onto the drawer support and push it in until it is fully closed.

4 Refit the bottom fridge door basket.

Full-Convert Drawer

This feature is only available on some models.

Using the Full-Convert Drawer

The **Full-Convert Drawer** provides storage space with a variable temperature control that can be

adjusted to keep the compartment either colder or warmer than the fridge. The control panel for the drawer is on the Display of the left fridge door.

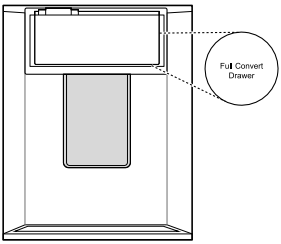

Freezer Mode
To use the convertible drawer as a fridge, press **Full-Convert Drawer** and then press **Freezer**. Once the convertible drawer is set to freezer mode, Its temperature matches the freezer temperature.

- To change the temperature in freezer mode, use the **Freezer** menu.

⚠ CAUTION

- Do not store glass bottles and cans in the convertible drawer when the drawer is set to freezer mode. The containers may break.
- Before switching the drawer to fridge mode, store frozen food in the freezer. Otherwise the frozen food may thaw and spoil.
- Do not touch the metal parts in the convertible drawer with wet or damp hands. Doing so may cause frostbite.

Shelf

⚠ CAUTION

- Glass shelves are heavy. Use special care when removing them.
- Do not clean glass shelves with warm water while they are cold. Shelves may break if exposed to sudden temperature changes or impact.

Removing/Refitting Order

Open the fridge door fully before removing and refitting the shelf.

Remove in the order below.

Refit the shelf in the reverse order of the removal process.

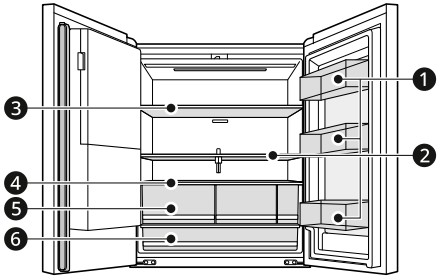

❶ **Fridge Door Baskets**

❷ **Middle Fridge Shelf**

❸ **Upper Fridge Shelf**

❹ **Lower Fridge Shelf**

❺ **Upper Fridge Drawer**

❻ **Lower Fridge Drawer**

Using the Folding Shelf

This feature is only available on some models.

Store taller items, such as a gallon container or bottles, by pushing the front half of the shelf underneath the back half of the shelf. Pull the front of the shelf forward to return to a full shelf.

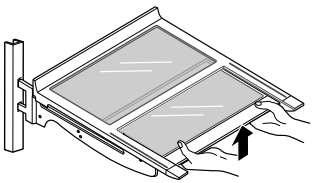

Removing/Refitting the Shelf

This feature may vary depending on model purchased.

Type A

1 Tilt up the front of the shelf and then lift the shelf straight up.

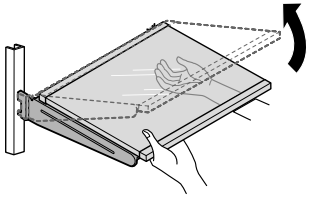

2 Pull the shelf out.

3 To assemble, tilt the front of the shelf upwards and carefully guide the shelf hooks into the slots at the desired height.

⚠ CAUTION

- Assemble the shelf that will be positioned on the left side first.

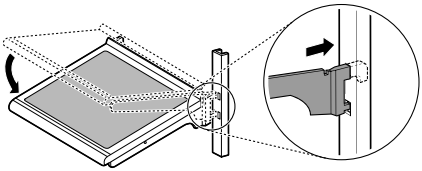

4 Install the remaining shelf on the right side using the same method.

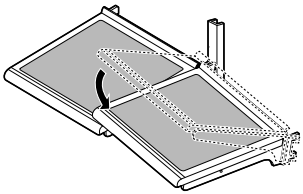

5 Lift up the left shelf, press down the right shelf, and ensure that both shelves are flat.

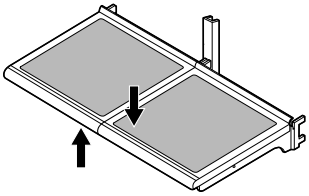

⚠ CAUTION

- Glass shelves are heavy. Use special care when removing them.
- Do not clean glass shelves with warm water while they are cold. Shelves may break if exposed to sudden temperature changes or impact.

Type B

1 Slightly lift the rear of the shelf to disengage it, then pull it out.

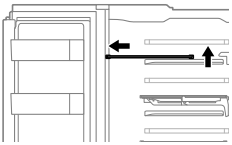

2 Tilt the front of the shelf downward to release it from inside the compartment.

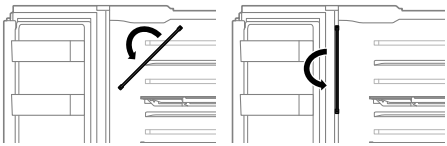

3 Position the shelf in the gap between the door and the case.

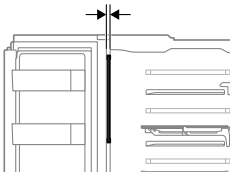

4 Use the gap to rotate the shelf and remove it.

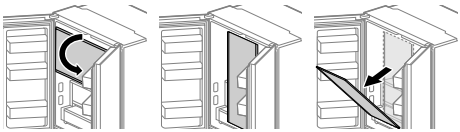

5 Refit the shelf in the reverse order of the removal process.

⚠ CAUTION

- Before removing or reinstalling the refrigerator shelves, fully open both refrigerator doors. If only one door is open, the shelf may not be completely removed.
- Glass shelves are heavy. Use special care when removing them.
- Remove all food from the shelf before taking it out.
- When placing the shelf inside the appliance, do not insert it upside down or with the front and rear reversed.

Door Basket

Removing/Refitting the Door Basket

This feature may vary depending on model purchased.

The door baskets are removable for easy cleaning and adjustment.

1 To remove the baskets, simply lift the basket up and pull straight out.

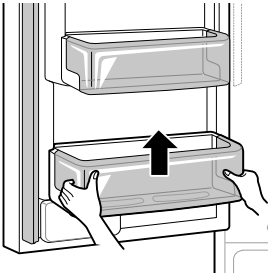

2 To assemble the baskets, slide it in above the desired support and push down until it snaps into place.

SMART FUNCTIONS

LG ThinQ Application

This feature is only available on models with Wi-Fi.

The **LG ThinQ** application allows you to communicate with the appliance using a smartphone.

LG ThinQ Application Features

Communicate with the appliance from a smartphone using the convenient smart features.

Smart Diagnosis

- If you experience a problem while using the appliance, this smart diagnosis feature will help you diagnose the problem.

Settings

- Allows you to set various options on the appliance and in the application.

NOTE

- In the following cases, you must update the network information for each appliance in the **LG ThinQ** application under **Device Cards** > **Settings** > **Change Network**.
  - wireless router is changed
  - wireless router password is changed
  - Internet service provider is changed
- The application is subject to change for appliance improvement purposes without notice to users.
- Functions may vary by model.

Installing LG ThinQ Application and Connecting an LG Appliance

Models with QR Code

Scan the QR code attached to the product using the camera or a QR code reader application on your smartphone.

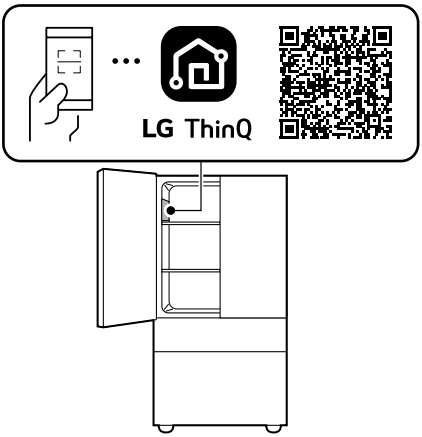

Models without QR Code

1 Search for and install the **LG ThinQ** application from the Google Play Store or Apple App Store on a smartphone.

2 Run the **LG ThinQ** application and sign in with your existing account or create an LG account to sign in.

3 Touch the add (+) button on the **LG ThinQ** application to connect your LG appliance. Follow the instructions in the application to complete the process.

NOTE

- To verify the Wi-Fi connection, check that the Wi-Fi indicator on the control panel is lit.

- The appliance supports 2.4 GHz Wi-Fi networks only. To check your network frequency, contact your Internet service provider or refer to your wireless router manual.
- **LG ThinQ** is not responsible for any network connection problems or any faults, malfunctions, or errors caused by network connection.
- The surrounding wireless environment can make the wireless network service run slowly.
- If the distance between the appliance and the wireless router is too far, the signal strength becomes weak. It may take a long time to connect or installation may fail.
- If the appliance is having trouble connecting to the Wi-Fi network, it may be too far from the router. Purchase a Wi-Fi repeater (range extender) to improve the Wi-Fi signal strength.
- The network connection may not work properly depending on the Internet service provider.
- The Wi-Fi connection may not connect or may be interrupted because of the home network environment.
- The appliance cannot be connected due to problems with the wireless signal transmission. Unplug the appliance and wait about a minute before trying again.
- The wireless network name (SSID) should be a combination of English letters (A-Z) and numbers (0-9). Do not use special characters.
- Smartphone user interface (UI) may vary depending on the mobile operating system (OS) and the manufacturer.
- If the security protocol of the router is set to **WEP**, you may fail to set up the network. Please change it to other security protocols (**WPA2** is recommended) and connect the product again.
- To disable the Wi-Fi function, press and hold the **Wi-Fi** button for 3 seconds. The Wi-Fi indicator will be turned off.
- To reconnect the appliance or add another user, press and hold the **Wi-Fi** button for 3 seconds to temporarily turn it off. Run the **LG ThinQ** application and follow the instructions in the application to connect the appliance.

Declaration of Conformity

CE

Hereby, LG Electronics declares that the radio equipment type Refrigerating Appliance is in compliance with Directive 2014/53/EU. The full text of the EU declaration of conformity is available at the following internet address:

http://www.lg.com/global/support/cedoc/cedoc#

Radio Equipment Specifications

Type	Operating Frequency Range	Output Power (Max.)
Wireless LAN	2 400 MHz - 2 483,5 MHz	< 100 mW
Bluetooth*1		

*1 This feature is only available on some models.

For consideration of the user, this device should be installed and operated with a minimum distance of 20 cm between the device and the body.

Open Source Software Notice Information

To obtain the source code that is contained in this product, under GPL, LGPL, MPL, and other open source licenses that have the obligation to disclose source code, and to access all referred license terms and copyright notices, please visit https://opensource.lge.com.

LG Electronics will also provide open source code to you for a charge covering the cost of performing such distribution upon email request to opensource@lge.com.

This offer is valid to anyone in receipt of this information for a period of three years after our last shipment of this product.

Smart Diagnosis

Use this feature to help you diagnose and solve problems with your appliance.

NOTE

- For reasons not attributable to LGE's negligence, the service may not operate due to external factors such as, but not limited to, Wi-Fi unavailability, Wi-Fi disconnection, local app store policy, or app unavailability.
- The feature may be subject to change without prior notice and may have a different form depending on where you are located.

Using LG ThinQ to Diagnose Issues

If you experience a problem with your Wi-Fi equipped appliance, it can transmit troubleshooting data to a smartphone using the **LG ThinQ** application.

- Launch the **LG ThinQ** application and select the **Smart Diagnosis** feature in the menu. Follow the instructions provided in the **LG ThinQ** application.

Using Audible Diagnosis to Diagnose Issues

Follow the instructions below to use the audible diagnosis method.

- Launch the **LG ThinQ** application and select the **Smart Diagnosis** feature in the menu. Follow the instructions for audible diagnosis provided in the **LG ThinQ** application.

1 Open the fridge door and then hold the phone near the upper right of the fridge's top section.

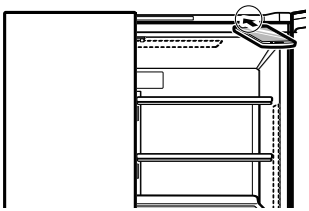

2 Press the **Settings** button and select the **Smart Diagnosis** under the **Maintenance & Info** in the menu.

3 Press the **Audible Diagnosis** button.

4 Press the **START** button to start Smart Diagnosis mode.

5 After the data transfer is complete, the diagnosis will be displayed in the application.

NOTE

- For best results, do not move the phone while the tones are being transmitted.

MAINTENANCE

Cleaning

General Cleaning Tips

- Performing manual defrosting, maintenance or cleaning of the appliance while food is stored in the freezer can raise the temperature of the food and reduce its storage life.
- Regularly clean any surfaces that can come in contact with food.
- When cleaning the inside or outside of the appliance, do not wipe it with a rough brush, toothpaste, or flammable materials. Do not use cleaning agents containing flammable substances. This may cause discolouration or damage to the appliance.
  - Flammable substances: alcohol (ethanol, methanol, isopropyl alcohol, isobutyl alcohol, etc.), thinner, bleach, benzene, flammable liquid, abrasive, etc.
- After cleaning, check if the power cable is damaged.

Cleaning the Exterior

- When cleaning the outside air vents of the appliance by means of vacuuming, then the power cord should be unplugged from the outlet to avoid any static discharge that can damage the electronics or cause an electric shock. Regular cleaning of the rear and side ventilation covers is recommended to maintain reliable and economical operation of the unit.
- Keep the air vents on the exterior of the appliance clean. Blocked air vents can cause fire or appliance damage.
- For the appliance exterior, use a clean sponge or soft cloth and a mild detergent in warm water. Do not use abrasive or harsh cleaners. Dry thoroughly with a soft cloth. Do not use contaminated cloths when cleaning the stainless steel doors. Always use a dedicated cloth and wipe in the same direction as the grain. This helps reduce surface staining and tarnishing.

Cleaning the Interior

- Before removing a shelf or drawer from inside the appliance, remove all stored foods from the shelf or drawer to prevent injury or damage to the appliance. Otherwise, injury may occur due to the weight of stored foods.
- Detach the shelves and drawers and clean them with water and a mild detergent, and then dry them sufficiently, before replacing them.
- Regularly wipe the door gaskets and door seals with water and a mild detergent. Never use solvent or acidic based chemicals to clean the interior. Doing so will alter its integrity.
- Door basket spills and stains should be cleaned as they can compromise storage ability of the basket and could even be damaged.
- Never clean the shelves, door baskets, or containers in the dishwasher or in hot water. The parts may become deformed, and glass may shatter due to the heat.
- The automatic defrosting system in the appliance ensures that the compartment remains free of ice buildup under normal operating conditions. Users do not need to defrost it manually.

Cleaning the Condenser Cover

Use a vacuum cleaner with a brush to clean the condenser cover and vents. Do not remove the panel covering the condenser coil area.

We strongly recommend that this be done every 12 months to maintain operating efficiency. Failing to do so could cause loss of cooling, higher energy usage and compressor overheating.

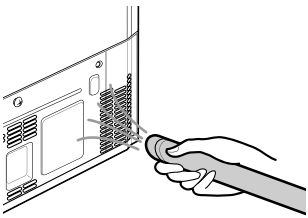

Water Filter

This feature is only available on some models.

Before Replacing the Water Filter

⚠ WARNING

- Do not allow children to have access to small parts during the installation of this product.
- Do not use with water that is microbiologically unsafe or of unknown quality without adequate disinfection before or after the system. Systems certified for cyst reduction may be used on disinfected water that may contain filterable cysts.

⚠ CAUTION

- Do not install if water pressure exceeds 827 kPa. If your water pressure exceeds 827 kPa, you must install a pressure limiting valve. Contact a plumbing professional if you are uncertain how to check your water pressure.
- Do not install where water hammer conditions may occur. If water hammer conditions exist, you must install a water hammer arrester. Contact a plumbing professional if you are uncertain how to check for this condition.
- Do not install on hot water supply lines. The maximum operating water temperature of this filter system is 37.8 °C.
- Protect filter from freezing. Drain filter when temperatures drop below 4.4 °C.
- The disposable filter cartridge MUST be replaced every 6 months, at the rated capacity or if a noticeable reduction in flow rate occurs.
- Where a backflow prevention device is installed on a water system, a device for controlling pressure due to thermal expansion must be installed.
- Ensure all tubing and fittings are secure and free of leaks.

NOTE

- While the testing was performed under standard laboratory conditions, actual performance may vary.
- It is essential that the manufacturer's recommended installation, maintenance and filter replacement requirements be carried out for the product to perform as advertised.

Replacing the Water Filter

The filter must be changed every 6 months or when the water filter indicator on the control panel lights turns on or the water dispenser output decreases.

- To purchase a replacement water filter:
  - Use replacement cartridge: LT1000P, LT1000P*, LT1000PC, LT1000PCS or ADQ747935**
  - Visit your local dealer or distributor or contact the LG Electronics Customer Information Centre. For further assistance, visit our website at lg.com

1 Open the right drawer of the fridge compartment. Lift the front of the drawer slightly and pull it out.
   - To remove the drawer, open the fridge doors as far as they will go.

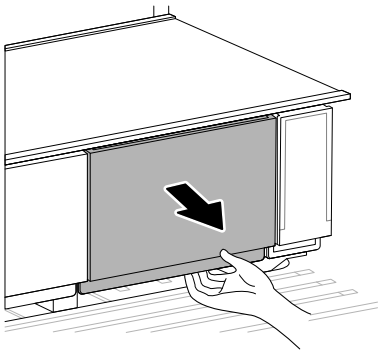

2 Press the top of the water filter cover to remove the filter cover.

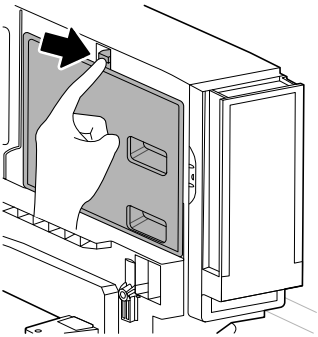

3 Rotate the filter counterclockwise to remove it.

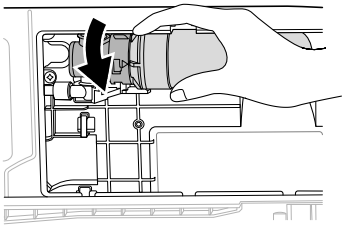

NOTE

- Replacing the water filter causes a small amount of water to drain.
- Wrap a cloth around the front end of the water filter cover to collect any leaking water. Hold the water filter upright, once it is removed, to prevent any remaining water from spilling out of the water filter.

4 Remove the cap of the new filter.

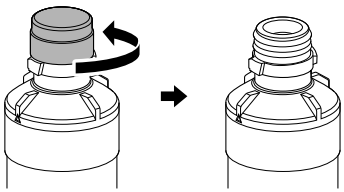

5 Insert the new filter into the filter head and rotate it clockwise until it stops.

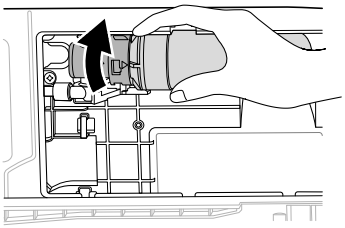

6 Close the filter cover and check whether the top and bottom are closed completely.

- Assemble the bottom of the filter cover first.

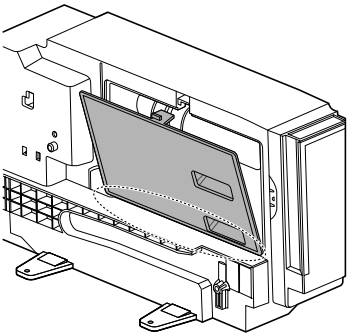

7 Assemble the drawer.

8 After changing the filter, press the Reset button.

9 Dispense water for approximately 5 minutes to remove trapped air and contaminants from the system

⚠ CAUTION

- Failure to replace filters when required or using non LG authorised water filters can cause the filter cartridge to leak and result in property damage.

Application Guidelines/Water Supply Parameters

- Service Flow: 1.9 lpm
- Water Supply: Community or Private Well - Potable Water
- Water Pressure: 138 - 827 kPa
- Water Temperature: 0.6 - 37.8 °C
- Capacity: 757 litres

Air Filter

Reusing the Air Filter

This feature is only available on some models.

You can remove the odours absorbed by the Air Filter and reuse it.

If your model includes an LED on the air filter, there is no need to follow the process mentioned below. The LED feature enables the filter to be self-reusable.

1 Pull out the upper fridge drawer.

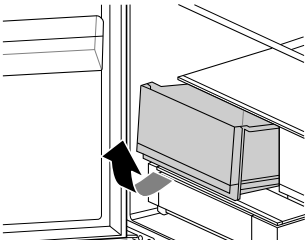

2 Take out the Air Filter.

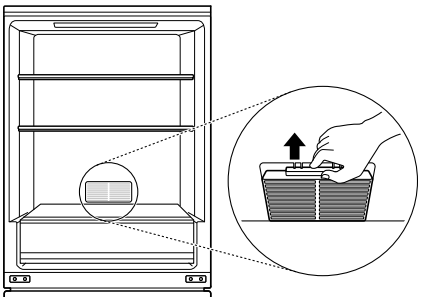

3 Dry it using a hair dryer or by exposing it to sunlight. The filter is reusable.

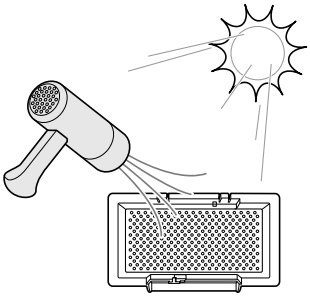

- To increase deodorizing performance, a natural palm wood material is attached to the filter. If residue falls off, it will not harm you and can be wiped off easily with a towel or cloth.

4 To assemble, first attach the bottom side,then press on the top side.

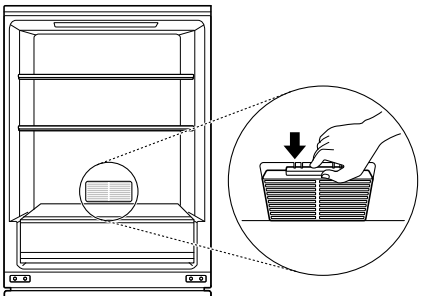

TROUBLESHOOTING

Before Calling for Service

Cooling

Symptoms	Possible Cause & Solution
There is no refrigeration or freezing.	**Is there a power interruption?** • Check the power of other appliances.
	Appliance is unplugged. • Plug the power plug in the outlet properly.
	A fuse in your home may be blown or the circuit breaker tripped. Or the appliance is connected to a GFCI (Ground Fault Circuit Interrupter) outlet, and the outlet's circuit breaker has tripped. • Check the main electrical box and replace the fuse or reset the circuit breaker. Do not increase fuse capacity. If the problem is a circuit overload, have it corrected by a qualified electrician. • Reset the circuit breaker on the GFCI. If the problem persists, contact an electrician.
There is poor refrigeration or freezing.	**Is the fridge or freezer temperature set to its warmest setting?** • Set the fridge or freezer temperature to a colder setting.
	Is the appliance in direct sunlight, or is it near a heat generating object such as cooking oven or heater? • Check the installation area and reinstall it away from heat generating objects.
	Did you store hot food without cooling it first? • Cool the hot food first before putting it in the fridge or freezer compartment.
	Did you put in too much food? • Maintain an appropriate space between food.
	Are the appliance doors completely closed? • Completely close the door and make sure that stored food is not obstructing in the door.
	Is there enough space around the appliance? • Adjust the installation position to make enough space around the appliance.
The appliance contains a bad smell.	**Is the fridge or freezer temperature set to its warmest setting?** • Set the fridge or freezer temperature to a colder setting.

Symptoms	Possible Cause & Solution
The appliance contains a bad smell.	**Did you put in food with a strong smell?** • Store foods with strong smells in sealed containers.
	Vegetables or fruit may have spoiled in the drawer. • Throw away rotten vegetables and clean the vegetable drawer. Do not store vegetables too long in the vegetable drawer.

Ice & Water

Symptoms	Possible Cause & Solution
The automatic icemaker does not produce ice or produces a small amount of ice.	**Did you install the appliance recently?** • The ice maker produces ice normally when approximately 48 hours have passed after the appliance is installed. • If the fridge compartment temperature is too cold, the water filter can freeze and block the water flow to the ice maker.
	Did you connect the water supply pipe to the appliance and open the supply valve? • Connect the water supply pipe to the appliance and open the supply valve completely.
	Is the water supply hose bent? • If the water supply hose is bent, the water flow could be compromised.
	Have you dispensed a large amount of ice recently? • It takes approximately 24 hours to produce more ice in the automatic icemaker. Please wait.
	Did you set the ice maker switch or the automatic icemaker button on the control panel to ON? • Press I on the automatic icemaker switch or set **ON** for the automatic icemaker button on the control panel. (For more details on how to use, visit LG Electronics website or use your smart device.)
	Is the temperature of the freezer compartment set too high? • If the set temperature is too warm, ice will be produced slowly or not at all. Set the Freezer temperature to -18 °C for normal operation of the automatic icemaker.
	Have you been opening the appliance door frequently? • If you open the appliance door frequently, cold air will escape, lowering the speed of ice production. Do not open and close the appliance door frequently.

Symptoms	Possible Cause & Solution
The automatic icemaker does not produce ice or produces a small amount of ice.	**Is the appliance door completely closed?** • If the appliance door is not completely closed, the temperature of the freezer compartment will increase, slowing down the ice production speed. Close the appliance door completely.
Ice is not dispensed.	**Unable to hear the sound of ice coming out?** • In the control panel, select the modes for cubed ice and crushed ice alternately to dispense the ice.
	Is the ice path blocked? (You can check the ice passage by separating the ice bucket.) • Ice may not be dispensed properly if the ice passage is blocked. Check the ice and clean the ice path regularly.
Water does not come out.	**The supply valve may be turned off. (For Plumbed models Only)** • Open the water supply valve. • Check if the fridge compartment temperature is too cold, as the water filter can freeze and block the water flow to the dispenser.
	The water tank may be empty. (Non plumbed models only) • Fill the water tank.
	Is the water supply valve closed? (For Plumbed models Only) • Open the water supply valve.
	Are you using unfiltered water? • Unfiltered water can contain a large amount of various heavy metals or foreign substances, so the filter may be clogged in the early stage regardless of the life of the filter.
Water tastes strange.	**Is the taste of water different when comparing it with the taste of water from the previous water purifier?** • Has the purified water or cold water not been used for an extended period of time?
	Has it been a long time since you installed and replaced the filter? • If an expired filter is used, the purification performance may decline. It is recommended to replace the filter according to the filter replacement period.
	Have you flushed out the filter properly in the initial stage after installing it? • When you install or replace the filter for the first time, you need to remove air and activated carbon residue from inside the filter. Use the appliance after dispensing and discharging approximately 5 litres of purified water from the dispenser by pressing the water dispensing lever. (Activated carbon is harmless to humans.)

Symptoms	Possible Cause & Solution
Water tastes strange.	**Has the purified water or cold water not been used for an extended period of time?** • The taste of old water may change due to bacterial growth. Use the product after dispensing and discharging approximately 5 litres (approximately three minutes) from the water dispenser.

Condensation & Frost

Symptoms	Possible Cause & Solution
There is condensation inside the appliance or on the bottom of the vegetable drawer cover.	**Did you store hot food without cooling it first?** • Cool the hot food first before putting it inside the fridge or freezer.
	Did you leave the appliance door open? • Although the condensation will disappear soon after you close the appliance door, you can wipe it with a dry cloth.
	Do you open and close the appliance door too frequently? • Condensation can form due to the temperature difference from the outside. Wipe out the dampness with a dry cloth.
	Did you put warm or moist food inside without sealing it in a container? • Store food in a covered or sealed container.
Frost has formed in the freezer compartment.	**Doors may not be closed properly.** • Check if the food item inside the appliance is blocking the door and make sure that the door is tightly closed.
	Did you store hot food without cooling it first? • Cool the hot food first before putting it in the fridge or freezer compartment.
	Is the air entry or exit of the freezer compartment blocked? • Make sure that air entry or exit is not blocked so that the air can circulate inside.
	Is the freezer compartment overfilled? • Maintain an appropriate space between items.
Frost or condensation has formed inside or outside the appliance.	**Did you open and close the appliance door frequently or is the appliance door improperly closed?** • Frosts or condensation can form if the outside air penetrates inside the appliance.

Symptoms	Possible Cause & Solution
Frost or condensation has formed inside or outside the appliance.	**Is the installation environment humid?** • Condensation can appear on the exterior of the appliance if the installation area is too humid or on a humid day such as a rainy day. Wipe off any moisture with a dry cloth.
The side or front of the appliance is warm.	**There are anti condensation pipes fitted to these areas of the appliance to reduce condensation forming from around the door area.** • The heat releasing pipe to prevent condensation is installed on the front and side of the appliance. You may feel it particularly hot right after the appliance is installed or during the summer. You can be assured that this is not a problem and is quite normal.
There is water inside or outside of the appliance.	**Is there water leakage around the appliance?** • Check if the water has leaked from a sink or another place.
	Is there water on the bottom of the appliance? • Check if the water is from the thawed frozen food or a broken or dropped container.

Parts & Features

Symptoms	Possible Cause & Solution
The appliance door is not closed tightly.	**Is the appliance leaning forward?** • Adjust the front feet to raise the front side slightly.
	Were the shelves properly assembled? • Refit the shelves if needed.
	Did you close the door with excessive force? • If you apply too much force or speed when closing the door, it may remain briefly open before closing. Make sure that you do not slam the door closed. Close the door gently.
It is difficult to open the appliance door.	**Did you open the door right after you closed it?** • If you try to open the appliance door within one minute after you closed it, you may have difficulties because of the pressure inside the appliance. Try to open the appliance door again in a few minutes so that the internal pressure stabilizes.
Door mullion does not fold in and out properly.	**Are front levelling legs extended, the appliance level, and doors aligned?** • Once the door baskets are filled, the doors may become misaligned, preventing the door mullion or the Auto Open Door function from working properly. Extend both front levelling legs fully so they are in firm contact with the floor. Follow the instruction in the Door Alignment section to raise the left fridge door until the door mullion is once again working properly. Adjust the right fridge door so it aligns with the left fridge door.

Symptoms	Possible Cause & Solution
The inside lamp in the appliance does not turn on.	**Lamp failure** • Close the door and re-open. If the lamp does not turn on, please contact the LG Electronics customer information centre. Do not attempt removal of the lamp.

Noises

Symptoms	Possible Cause & Solution
The appliance is noisy and generates abnormal sounds.	**Is the appliance installed on a weak floor or improperly levelled?** • Install the appliance on a solid and flat area.
	Does the rear of the appliance touch the wall? • Adjust the installation position to allow enough clearance around the appliance.
	Are objects scattered behind the appliance? • Remove the scattered objects from behind the appliance.
	Is there an object on top of the appliance? • Remove the object on top of the appliance.
Clicking noises	**The defrost control will click when the automatic defrost cycle begins and ends. The thermostat control (or appliance control on some models) will also click when cycling on and off.** • Normal Operation
Rattling noises	**Rattling noises may come from the flow of appliance, the water line on the back of the unit (for plumbed models only), or items stored around the appliance.** • Normal Operation
	Appliance is not resting evenly on the floor. • Floor is weak or uneven or levelling legs need to be adjusted. See the Door Alignment section.
	Appliance with a compressor was moved while operating. • Normal operation. If the compressor does not stop rattling after three minutes, turn the power to the appliance off and then on again.
Whooshing noises	**Evaporator fan motor is circulating air through the fridge and freezer compartments.** • Normal Operation
	Air is being forced over the condenser by the condenser fan. • Normal Operation

Symptoms	Possible Cause & Solution
Gurgling noises	**Appliance flowing through the cooling system.** • Normal Operation
Popping noises	**Contraction and expansion of the inside walls due to changes in temperature.** • Normal Operation
Vibrating	**If the side or back of the appliance is touching a cabinet or wall, some of the normal vibrations may make an audible sound.** • To eliminate the noise, make sure that the sides and back do not make any contact with any wall or cabinet.
Buzzing sound from the water tank. (Non plumbed models only)	**You may hear valve a buzzing sound from the water tank if the icemaker is on and the water tank is empty.** • Fill the water tank or turn the icemaker off.

Wi-Fi

Symptoms	Possible Cause & Solution
Your home appliance and smartphone are not connected to the Wi-Fi network.	**The password for the Wi-Fi that you are trying to connect to is incorrect.** • Find the Wi-Fi network connected to your smartphone and remove it, then register your appliance on **LG ThinQ**.
	Mobile data for your smartphone is turned on. • Turn off the **Mobile data** of your smartphone and register the appliance using the Wi-Fi network.
	The wireless network name (SSID) is set incorrectly. • The wireless network name (SSID) should be a combination of English letters (A-Z) and numbers (0-9). Do not use special characters.
	The router frequency is not 2.4 GHz. • Only a 2.4 GHz router frequency is supported. Set the wireless router to 2.4 GHz and connect the appliance to the wireless router. To check the router frequency, check with your Internet service provider or the router manufacturer.
	The distance between the appliance and the router is too far. • If the distance between the appliance and the router is too far, the signal may be weak and the connection may not be configured correctly. Move the location of the router so that it is closer to the appliance.

Customer Care and Service

Contact an LG Electronics customer information centre.

- To find information on LG authorized service centre, visit our website at www.lg.com.

- Only qualified service personnel from LG authorized service centre should disassemble, repair, or modify the appliance.
- The minimum warranty period of this refrigerating appliance is 24 months.
- Spare parts referenced in Regulation EU 2019/2019 are available for 7 years (only door gaskets are available for 10 years).
- To purchase spare parts, contact an LG Electronics customer information centre or our website at www.lg.com.

NOTE

- Regulation EU 2019/2019, valid from 1st March 2021, is related to the Energy Efficiency classes by Regulation EU 2019/2016.
- For more information about the energy efficiency of the appliance, visit https://eprel.ec.europa.eu and search using the model name (valid from 1st March 2021).
- Scan the QR code on the energy label supplied with the appliance, which provides a web link to the information related to the performance of the appliance in the EU EPREL database. Keep the energy label for reference and all other documents supplied with the appliance (valid from 1st March 2021).
- The model name can be found on the rating label of the appliance.
- This product contains a light source of energy efficiency class F.

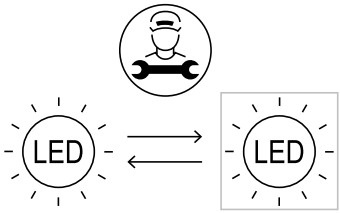

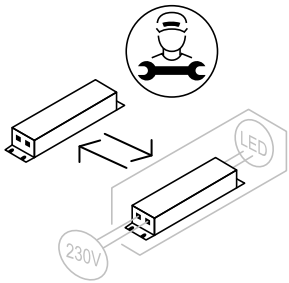

APPENDIX

CARING FOR THE ENVIRONMENT

Disposal of Your Old Appliance

ENGLISH

Disposal of Your Old Appliance

- This crossed-out wheeled bin symbol indicates that waste electrical and electronic products (WEEE) should be disposed of separately from the municipal waste stream.
- Old electrical products can contain hazardous substances so correct disposal of your old appliance will help prevent potential negative consequences for the environment and human health. Your old appliance may contain reusable parts that could be used to repair other products, and other valuable materials that can be recycled to conserve limited resources.
- You can take your appliance either to the shop where you purchased the product, or contact your local government waste office for details of your nearest authorised WEEE collection point. For the most up to date information for your country please see www.lg.com/global/recycling.

БЪЛГАРСКИ

Изхвърляне на стария уред

- Символът със зачертания контейнер показва, че отпадъците от електрическо и електронно оборудване (ОЕЕО) трябва да се изхвърлят отделно от битовите отпадъци.
- Старите електрически продукти могат да съдържат опасни вещества и правилното изхвърляне на Вашия уред ще помогне за предотвратяване на негативните последствия за околната среда и човешкото здраве. Вашият стар уред може да съдържа части за многократна употреба, които биха могли да бъдат използвани за ремонт на други продукти, както и други ценни материали, които могат да бъдат рециклирани с цел запазване на ограничените ресурси.
- Можете да занесете Вашия уред или в магазина, от който сте го закупили или можете да се свържете с местния държавен офис за отпадъците, за да получите информация за най-близкия разрешен ОЕЕО пункт за събиране на отпадъци. За най-актуална информация от Вашата държава, моля, погледнете тук: www.lg.com/global/recycling

CATALÀ

Eliminació de l’aparell antic

- Aquest símbol d’un contenidor ratllat indica que els residus de productes elèctrics i electrònics (RAEE) s’han d’eliminar per separat de la resta de residus municipals.
- Els productes elèctrics antics poden contenir substàncies perilloses, de manera que l’eliminació correcta del vostre aparell antic ajudarà a prevenir possibles conseqüències negatives per al medi ambient i la salut humana. El vostre aparell antic pot contenir peces reutilitzables que es podrien utilitzar per reparar altres productes, i altres materials valuosos que es poden reciclar per conservar recursos limitats.
- Podeu portar el vostre aparell a la botiga on el vau comprar, o bé posar-vos en contacte amb l’oficina de residus de la vostra administració local per tal d’obtenir informació sobre el vostre punt de recollida de RAEE autoritzat més proper. Per obtenir la informació més actualitzada del vostre país, consulteu www.lg.com/global/recycling.

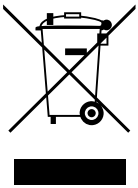

ČEŠTINA

Likvidace starého přístroje

- Tento symbol přeškrtnutého koše značí, že odpad z elektrických a elektronických výrobků (WEEE) je nutné likvidovat odděleně od linky komunálního odpadu.
- Staré elektrické výrobky mohou obsahovat nebezpečné látky, takže správná likvidace starých přístrojů pomůže zabránit potenciálním negativním důsledkům pro životní prostředí a lidské zdraví. Staré přístroje mohou obsahovat znovu použitelné díly, které lze použít k opravě dalších výrobků a další cenné materiály, které lze recyklovat a šetřit tak omezené zdroje.
- Spotřebič můžete zanést buď do obchodu, kde jste ho zakoupili nebo se obrátit na místní správu komunálních odpadů, kde získáte podrobné informace o autorizovaném sběrném místě WEEE. Pro poslední aktuální informace z vaší země si prosím prostudujte web www.lg.com/global/recycling

DANSK

Bortskaffelse af dit gamle apparat

- Dette symbol med en affaldsspand med kryds over angiver at elektrisk og elektronisk affald (WEEE) skal bortskaffes og genbruges korrekt, adskilt fra kommunens husholdningsaffald.
- Gamle elektriske produkter kan indeholde farlige stoffer, så når du bortskaffer dit gamle apparat på korrekt vis, hjælper du med at forhindre mulige negative konsekvenser for miljø og mennesker. Dit gamle apparat kan indeholde dele som kan genbruges, fx til at reparere andre produkter, eller værdifulde materialer som kan genbruges og derved begrænse spild af værdifulde ressourcer.
- Du kan enten tage apparatet til den butik hvor du købte det, eller kontakte dit lokale affaldskontor angående oplysninger om det nærmeste, autoriserede WEEE-samlepunkt. Find de sidste nye oplysninger for dit land på www.lg.com/global/recycling

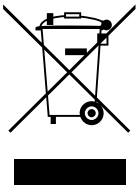

DEUTSCH

Entsorgung Ihrer Altgeräte

- Das durchgestrichene Symbol eines fahrbaren Abfallbehälters weist darauf hin, dass Elektro- und Elektronik- Produkte (WEEE) getrennt vom Hausmüll entsorgt werden müssen. Bitte entsorgen Sie Altgeräte getrennt von anderem Abfall und bringen Sie diese zu einer ausgewiesenen Sammelstelle für das Recycling von elektrischen und elektronischen Geräten. Falls die Geräte Batterien oder Lampen enthalten, die vom Endverbraucher ohne Beschädigung leicht entnommen werden können, trennen Sie diese bitte vor der Entsorgung von den Hauptgeräten, es sei denn, Sie möchten, dass die alten Geräte wiederverwendet werden (alte Batterien und Lampen werden getrennt gesammelt).
  Bitte beachten Sie auch, dass Sie persönlich dafür verantwortlich sind, personenbezogene Daten auf dem Gerät zu löschen, bevor Sie Ihre Geräte entsorgen.
- Alte elektrische Produkte können gefährliche Substanzen enthalten, die eine korrekte Entsorgung dieser Altgeräte erforderlich machen, um schädliche Auswirkungen auf die Umwelt und die menschliche Gesundheit zu vermeiden. Ihre ausgedienten Geräte können wiederverwendbare Teile enthalten, mit denen möglicherweise andere Produkte repariert werden können, aber auch sonstige wertvolle Materialien enthalten, die zur Schonung knapper Ressourcen recycelt werden können.
- Sie können Ihr Gerät entweder in den Laden zurückbringen, in dem Sie das Produkt ursprünglich erworben haben oder Sie kontaktieren Ihre Gemeindeabfallstelle für Informationen über die nächstgelegene autorisierte WEEE Sammelstelle. Bitte beachten Sie, dass einige* Vertreiber verpflichtet sind :
  - bei der Abgabe eines neuen Elektro- oder Elektronikgerätes an einen Endnutzer ein Altgerät des Endnutzers der gleichen Geräteart unentgeltlich zurückzunehmen, und
  - Altgeräte, die in keiner äußeren Abmessung größer als 25 Zentimeter sind, im Einzelhandelsgeschäft oder in unmittelbarer Nähe hierzu unentgeltlich zurückzunehmen; Wenn Offline oder Online Händler Neugeräte an Privathaushalte liefern, sind sie verpflichtet, Altgeräte direkt bei diesen abzuholen oder Rückgabemöglichkeiten in zumutbarer Entfernung anzubieten. Daher empfehlen wir Ihnen sich für weitere Informationen an Ihren Händler zu wenden.
- LG Electronic Deutschland GmbH ist ordnungsgemäß als Hersteller in Deutschland registriert. Damit trägt LG deutschlandweit zur Sammlung von Elektro- und Elektronik-Altgeräten bei, die Sie in kommunalen Getrenntsammelstellen abgeben. Die aktuellsten Informationen finden Sie unter: www.lg.com/global/recycling oder https://www.lg.com/de/support/altgeraete-rueckgabe.
  * Vertreiber mit einer Verkaufsfläche für Elektro- und Elektronikgeräte von mindestens 400 Quadratmetern sowie Vertreiber von Lebensmitteln mit einer Gesamtverkaufsfläche von mindestens 800 Quatratmetern, die Elektro- und Elektronikgeräte anbieten

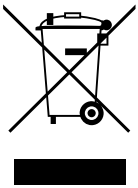

ΕΛΛΗΝΙΚΆ

Απόρριψη της παλιάς σας συσκευής

- Αυτό το διαγραμμένο σύμβολο του τροχοφόρου κάδου υποδεικνύει ότι τα απόβλητα ηλεκτρικών και ηλεκτρονικών εξοπλισμών (ΑΗΗΕ) πρέπει να απορρίπτονται χωριστά από τα γενικά οικιακά απορρίμματα.
- Τα παλιά ηλεκτρικά προϊόντα μπορεί να περιέχουν επικίνδυνες ουσίες και ως εκ τούτου η σωστή απόρριψη της παλιάς σας συσκευής αποτρέπει ενδεχόμενες αρνητικές συνέπειες για το περιβάλλον και την ανθρώπινη υγεία. Η παλιά σας συσκευή μπορεί να περιέχει επαναχρησιμοποιήσιμα ανταλλακτικά που θα μπορούσαν να χρησιμοποιηθούν για την επισκευή άλλων προϊόντων, καθώς και άλλα υλικά αξίας που μπορούν να ανακυκλωθούν για εξοικονόμηση των περιορισμένων φυσικών πόρων.
- Μπορείτε να πάτε τη συσκευή σας, είτε στο κατάστημα από το οποίο αγοράσατε το προϊόν, ή να επικοινωνήσετε με το τοπικό γραφείο απορριμμάτων για λεπτομέρειες σχετικά με το πλησιέστερο εγκεκριμένο σημείο συλλογής ΑΗΗΕ (Απόβλητα Ηλεκτρικών και Ηλεκτρονικών Εξοπλισμών). Για τις πιο πρόσφατες πληροφορίες για τη χώρα σας επισκεφθείτε τη διεύθυνση www.lg.com/global/recycling

ESPAÑOL

Símbolo para marcar AEE

- El símbolo del contenedor de basura tachado con un aspa indica que la recogida separada de aparatos eléctricos y electrónicos (AEE) debe realizarse de manera separada.
- Los productos eléctricos antiguos pueden contener sustancias peligrosas de modo que la correcta eliminación del antiguo aparato ayudará a evitar posibles consecuencias negativas para el medio ambiente y para la salud humana. El antiguo aparato puede contener piezas reutilizables que podrían utilizarse para reparar otros productos y otros materiales valiosos que pueden reciclarse para conservar los recursos limitados.
- Este producto contiene pilas y/o acumuladores. Siempre que no sea necesaria la intervención de un profesional cualificado para ello, y antes del depósito final del producto en las instalaciones de recogida selectiva, usted debe extraer las pilas y acumuladores de forma segura y separadamente para su adecuada gestión.
- Puede llevar el aparato a cualquiera de los centros autorizados para su recogida. Para obtener la información más actualizada para su país por favor visite www.lg.com/global/recycling

EESTI

Vana seadme hävitamine

- Läbikriipsutatud ristiga prügikasti sümbol tähendab, et elektri- ja elektroonikaseadmete (WEEE) jäätmed tuleb kõrvaldada olmeprügist eraldi.
- Vanad elektriseadmed võivad sisaldada ohtlikke koostisosi, seega aitab prügi nõuetekohane hävitamine vältida võimalikku negatiivset mõju loodusele ja inimeste tervisele. Teie kasutatud seade võib sisaldada taaskasutatavaid osi, millega saab parandada teisi seadmeid ning muid väärtuslikke materjale, mida saab taaskasutada, et säilitada piiratud ressursse.
- Saate viia oma seadme kas kauplusse, kust see on ostetud või võtta ühendust kohaliku prügiveo ettevõttega, et saada lisainfot oma lähima WEEE jäätmete kogumiskoha kohta. Kõige ajakohasemat infot oma riigi kohta vaadake www.lg.com/global/recycling

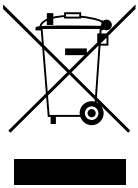

SUOMI

Vanhan laitteesi hävittäminen

- Tämä ylirastitettu jäteastian merkki ilmaisee, että sähkö- ja elektronikkalaitteiden jätteet (WEEE) tulee pitää erillään kotitalousjätteestä ja viedä kunnalliseen kierrätyskeskukseen.
- Vanhat sähkötuotteet voivat pitää sisällään vaarallisia aineita, joten loppuun käytetyn laitteen oikea hävittäminen ehkäisee ympäristö- ja terveyshaittoja. Vanha laitteesi saattaa pitää sisällään uudelleen käytettäviä osia, joita voidaan käyttää korjaamaan muita tuotteita, sekä arvokkaita materiaaleja, joita voidaan kierrättää rajoitettujen resurssien säästämiseksi.
- Voit viedä laitteesi joko liikkeeseen, josta hankit tuotteen, tai ottaa yhteyttä paikallishallintosi ympäristötoimistoon koskien lähintä valtuutettua WEEE -keräyspistettä. Kaikkein viimeisimmät tiedot koskien maatasi, ks. osoitteessa www.lg.com/global/recycling

FRANÇAIS

Recyclage de votre ancien appareil

- Ce symbole de poubelle barrée d'une croix indique que votre équipement électrique et électronique (EEE) ne doit pas être jeté avec les ordures ménagères. Il doit faire l'objet d'un tri et d'une collecte sélective séparée.
- Les équipements électriques que vous jetez peuvent contenir des substances dangereuses. Il est donc important de les jeter de façon appropriée afin d'éviter des impacts négatifs sur l'environnement et la santé humaine. L'équipement que vous jetez peut également contenir des pièces réutilisables pour la réparation d'autres produits ainsi que des matériaux précieux pouvant être recyclés pour préserver les ressources de la planète.
- Vous pouvez rapporter votre appareil au commerçant qui vous l'a vendu ou contacter votre collectivité locale pour connaitre les points de collecte de votre EEE. Vous trouverez également des informations à jour concernant votre pays en allant sur www.quefairedemesdechets.fr

HRVATSKI

Zbrinjavanje starog uređaja

- Ovaj simbol prekrižene kante za smeće na kotačićima označava kako se otpadni električni i električni proizvodi (WEEE) moraju zbrinjavati odvojeno od komunalnog otpada.
- Dotrajali električni proizvodi mogu sadržavati opasne tvari stoga će ispravno zbrinjavanje vaših dotrajalih uređaja pomoći u sprječavanju potencijalnih negativnih posljedica na okoliš i ljudsko zdravlje. Vaš dotrajao uređaj može sadržavati dijelove koji se mogu ponovo iskoristiti za popravak drugih proizvoda te druge vrijedne materijale koji se mogu reciklirati i tako sačuvati ograničene resurse.
- Ovisno o razini smetnje / štete i dobi stavke, stari proizvodi mogu se popraviti za više radnog života koji će spriječiti izbjeći otpada. Proizvodi koji nisu prikladni za ponovnu uporabu može se reciklirati da se oporavim vrijedne resurse i pomoći da se smanji globalno potrošnju novih sirovina.
- Uređaj možete odnijeti u trgovinu u kojoj ste kupili proizvod ili možete kontaktirati ured za zbrinjavanje otpada kod vaših mjesnih nadležnih tijela te od njih saznati više informacija o najbližem ovlaštenom WEEE sabirnom centru. Za najnovije informacije iz svoje države pogledajte internetske stranice www.lg.com/global/recycling

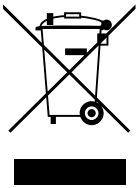

MAGYAR

A régi készülék ártalmatlanítása

- A leselejtezett elektromos és elektronikai termékeket a háztartási hulladéktól elkülönítve kell begyűjteni, a jogszabályok által kijelölt módon és helyen.
- Régi készülékeinek megfelelő leselejtezése segíthet megelőzni az esetleges egészségre vagy környezetre ártalmas hatásokat.
- Ha további információra van szüksége régi készülékeinek leselejtezésével kapcsolatban, lépjen kapcsolatba velünk a szelektalok.hu oldalon ahol tájékoztatjuk Önt visszavételi, átvételi, gyűjtési és kezelési kötelezettségeinkről.

ITALIANO

Smaltimento delle apparecchiature obsolete

- Tutte le apparecchiature elettriche ed elettroniche, contrassegnate da questo simbolo (“bidone della spazzatura barrato da una croce”), devono essere raccolte e smaltite separatamente rispetto agli altri rifiuti urbani misti mediante impianti di raccolta specifici installati da enti pubblici o dalle autorità locali. Si ricorda che gli utenti finali domestici possono consegnare gratuitamente le apparecchiature elettriche ed elettroniche a fine vita presso il punto vendita all’atto dell’acquisto di una nuova apparecchiatura equivalente. Gli utenti finali domestici possono inoltre consegnare gratuitamente apparecchiature elettriche ed elettroniche di piccolissime dimensioni (non eccedenti i 25 cm) a fine vita direttamente presso un punto vendita a ciò abilitato, senza obbligo di acquistare una apparecchiatura nuova di tipo equivalente. Si prega di informarsi previamente presso il punto vendita prescelto circa tale ultima modalità di conferimento dell’apparecchiatura a fine vita.
- Il corretto smaltimento dell’unità obsoleta contribuisce a prevenire possibili conseguenze negative sulla salute degli individui e sull’ambiente. Una gestione responsabile del fine vita delle apparecchiature elettriche ed elettroniche da parte degli utenti contribuisce al riutilizzo, al riciclaggio ed al recupero sostenibile dei prodotti obsoleti e dei relativi materiali.
- Per informazioni più dettagliate sullo smaltimento delle apparecchiature obsolete, contattare l’ufficio del comune di residenza, il servizio di smaltimento rifiuti o il punto vendita in cui è stato acquistato il prodotto. (www.lg.com/global/recycling)

LIETUVIŲ

Seno prietaiso utilizavimas

- Išbrauktos šiukšlių dėžės simbolis rodo, kad elektros ir elektronikos įrangos atliekas (EĮA) reiktų utilizuoti atskirai nuo buitinių atliekų.
- Senoje elektrinėje įrangoje gali būti pavojingų medžiagų, taigi tinkamas seno prietaiso utilizavimas padės apsisaugoti nuo galimų neigiamų pasekmių aplinkai ir žmonių sveikatai. Jūsų sename prietaise gali būti dalių, kurias galima panaudoti dar kartą taisant kitą įrangą, ir kitų vertingų medžiagų, kurias galima perdirbti siekiant tausoti ribotus išteklius.
- Savo prietaisą galite nugabenti į parduotuvę, kurioje jį įsigijote, arba kreipkitės į vietos valdžios atliekų tarnybą ir sužinokite, kur yra artimiausia EĮA surinkimo vieta. Norėdami gauti daugiau informacijos apie savo šalies reikalavimus, apsilankykite www.lg.com/global/recycling.

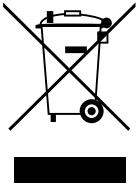

LATVIEŠU

Jūsu vecās ierīces likvidēšana

- Šis simbols – pārsvītrota atkritumu tvertne uz riteņiem – norāda, ka elektrisko un elektronisko iekārtu atkritumi (EEIA) jāutilizē atsevišķi no sadzīves atkritumu plūsmas.
- Veci elektriskie izstrādājumi var saturēt bīstamas vielas, tādēļ jūsu vecās ierīces pareiza utilizācija palīdzēs novērst iespējamās negatīvās sekas videi un cilvēka veselībai. Jūsu vecā ierīce var saturēt vairākkārt izmantojamas detaļas, kuras var izmantot citu izstrādājumu remontam, un citus vērtīgus materiālus, kurus var pārstrādāt, tādējādi saglabājot ierobežotus resursus.
- Jūs varat aiznest ierīci vai nu uz veikalu, kurā šo izstrādājumu iegādājieties, vai sazināties ar vietējās pašvaldības atkritumu savākšanas iestādi un uzzināt sīkāku informāciju par tuvāko oficiālo EEIA savākšanas punktu. Jaunāko informāciju par savu valsti skatiet vietnē www.lg.com/global/recycling.

МАКЕДОНСКИ

Фрлање на вашиот стар апарат

- Сите електрични и електронски производи треба да се фрлат засебно од комуналниот отпад, односно во собирни капацитети назначени од страна на владата или локалните власти.
- Правилното фрлање на вашиот стар апарат ќе помогне да се спречат потенцијални негативни последици за околината и човековото здравје.
- За подетални информации за фрлањето на вашиот стар апарат, стапете во контакт со општинската служба за отстранување отпад или со продавницата од каде што сте го купиле производот.

NEDERLANDS

Verwijdering van uw oude apparaat

- Dit symbool van de doorgekruiste vuilnisbak geeft aan dat afgedankte elektrische en elektronische producten (WEEE) afzonderlijk van het huishoudelijke afval moeten worden verwijderd.
- Oude elektrische producten kunnen gevaarlijke stoffen bevatten, dus een juiste verwijdering van uw oude apparaat helpt bij het voorkomen van mogelijke negatieve gevolgen voor het milieu en de volksgezondheid. Uw oude apparaat kan herbruikbare onderdelen bevatten die kunnen worden gebruikt voor het repareren van andere producten, en andere waardevolle materialen die kunnen worden gerecycled voor het behoud van beperkte grondstoffen.
- U kunt uw apparaat meenemen naar de winkel waar u het product heeft gekocht, of u kunt contact opnemen met uw plaatselijke afvalverwerking instantie voor de gegevens van uw dichtstbijzijnde geautoriseerde WEEE-verzamelpunt. Voor de meest recente informatie voor uw land verwijzen wij u naar www.lg.com/global/recycling

NORSK

Avhending av gamle apparater

- Dette symbolet av en utkrysset avfallsdunk indikerer at kassert elektronikk og elektroniske produkter (WEEE) skal kastes separat fra husholdningsavfall og leveres til den kommunale resirkuleringen.
- Gamle elektriske produkter kan inneholde farlige stoffer, så korrekt avfallshåndtering av det gamle apparatet bidrar til å hindre potensielt negative konsekvenser for miljøet og andres helse. Gamle apparater kan inneholde gjenbrukbare deler som kan brukes til å reparere andre produkter og andre verdifulle materialer som kan resirkuleres for å bevare begrensede ressurser.
- Du kan bringe apparatet enten til butikken der du kjøpte produktet, eller ta kontakt med den lokale myndighetens avfallskontor for informasjon om nærmeste autoriserte innsamlingspunkt for el-avfall (WEEE-avfall). For den mest oppdaterte informasjonen for ditt land, gå til www.lg.com/global/recycling.

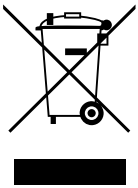

POLSKI

Utylizacja starego urządzenia

- Symbol przekreślonego pojemnika na odpady na kółkach oznacza, że produkty elektryczne lub elektroniczne (WEEE) należy zutylizować poza obiegiem odpadów komunalnych.
- Stare produkty elektroniczne mogą zawierać niebezpieczne substancje. Właściwa utylizacja starego urządzenia pozwoli uniknąć potencjalnych negatywnych skutków dla środowiska i zdrowia. Stare urządzenie może zawierać części wielokrotnego użytku, które mogą zostać wykorzystane do naprawy innych produktów lub inne wartościowe materiały, które można przetworzyć, aby oszczędzać zasoby naturalne.
- Urządzenie można oddać do sklepu, w którym zostało kupione lub skontaktować się z lokalnym urzędem gospodarki odpadami, aby uzyskać informacje o najbliższym punkcie zbiórki WEEE. Aby uzyskać aktualne informacje z zakresu gospodarki odpadami obowiązującej w danym kraju, należy odwiedzić stronę http://www.lg.com/global/sustainability/environment/take-back-recycling/global-network-europe (plik PDF : “For more information about how to recycle LG products in your country”.

PORTUGUÊS

Eliminação do seu aparelho usado

- Este símbolo de um caixote do lixo com rodas e linhas cruzadas sobrepostas indica que os resíduos de produtos elétricos e eletrónicos (REEE) devem ser eliminados separadamente do lixo doméstico.
- Os produtos elétricos usados podem conter substâncias perigosas, pelo que, a eliminação correta do seu aparelho usado pode contribuir para evitar potenciais consequências negativas para o ambiente e saúde humana. O seu aparelho usado pode conter peças reutilizáveis que podem ser usadas para reparar outros produtos e outros materiais úteis que podem ser reciclados para preservar os recursos limitados.
- Pode levar o seu aparelho à loja onde o adquiriu, ou contactar a sua entidade local de recolha e tratamento de resíduos para obter mais informações relativas ao ponto de recolha de REEE autorizado mais próximo. Para obter informações mais atualizadas relativas ao seu país, visite www.lg.com/global/recycling

ROMÂNĂ

Eliminarea aparatului vechi

- Simbolul de pubelă indică faptul că deșeurile de echipamente electrice și electronice (DEEE) trebuie eliminate separat de celelalte deșeuri.
- Produsele electrice și electronice vechi conțin substanțe periculoase. Astfel, prin eliminarea corespunzătoare veți contribui la prevenirea deteriorării mediului înconjurător și al sănătății umane. Este posibil ca dispozitivul dvs. vechi să conțină piese componente care pot fi folosite pentru repararea altor produse sau materiale importante ce pot fi reciclate în scopul economisirii resurselor limitate.
- Dispozitivul vechi poate fi returnat magazinului de unde a fost achiziționat sau puteți contacta firma responsabilă pentru eliminarea deșeurilor în scopul aflării locației unității autorizate pentru reciclarea deșeurilor electrice și electronice (WEEE). Pentru informații mereu actualizate și referitoare la țara dvs. vă rugăm să vizitați pagina web www.lg.com/global/recycling.

SLOVENČINA

Zneškodnenie starého spotrebiča

- Tento symbol prečiarknutého odpadkového koša na kolieskach znamená, že odpad z elektrických a elektronických zariadení (WEEE) musí byť zneškodnený samostatne od komunálneho odpadu.
- Staré elektrické produkty môžu obsahovať nebezpečné latky, preto správne zneškodnenie vášho starého spotrebiča pomôže zabrániť potenciálnym negatívnym dopadom na prostredie a ľudské zdravie. Váš starý spotrebič môže obsahovať diely, ktoré možno opätovne použiť na opravu iných produktov, a iné cenné materiály, ktoré možno recyklovať s cieľom chrániť obmedzené zdroje.
- Svoj spotrebič môžete zaniesť do predajne, kde ste produkt zakúpili, alebo sa môžete obrátiť na oddelenie odpadov miestnej samosprávy a požiadať o informácie o najbližšom zbernom mieste odpadu z elektrických a elektronických zariadení (WEEE). Najnovšie informácie platné pre vašu krajinu nájdete na stránke www.lg.com/global/recycling

SLOVENŠČINA

Odstranjevanje vaše stare naprave

- Prečrtan simbol smetnjaka opozarja, da je treba odpadne električne in elektronske izdelke (OEEI) odstranjevati ločeno od ostalih komunalnih odpadkov.
- Odpadni električni izdelki lahko vsebujejo nevarne snovi, zato s pravilnim odstranjevanjem stare naprave prispevate k preprečevanju morebitnih negativnih vplivov na okolje in zdravje ljudi. Vaša stara naprava lahko vsebuje dele, ki jih je mogoče uporabiti za popravilo drugih izdelkov, in druge dragocene materiale, ki jih je mogoče reciklirati in s tem ohraniti omejene vire.
- Svojo napravo lahko odnesete v trgovino, kjer ste jo kupili, ali pa se glede podrobnosti o najbližjem pooblaščenem zbirnem mestu za odpadno električno in elektronsko opremo obrnite na lokalno komunalno podjetje. Za najnovejše informacije za svojo državo si oglejte www.lg.com/global/recycling.

SHQIP

Hedhja e pajisjes suaj të vjetër

- Të gjitha produktet elektrike dhe elektronike duhet të hidhen veçmas nga mbetjet e bashkisë përmes pikave të grumbullimit të caktuara nga qeveria ose autoritetet vendase.
- Hedhja e duhur e pajisjes suaj të vjetër do të ndihmojë në parandalimin e pasojave të mundshme negative për mjedisin dhe shëndetin e njeriut.
- Për informacione më të hollësishme rreth hedhjes të pajisjes suaj të vjetër, ju lutem kontaktoni zyrën e qytetit, shërbimin për hedhjen e mbeturinave ose dyqanin ku e keni blerë produktin.

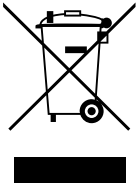

SRPSKI

Odlaganje starog aparata

- Ovaj simbol precrtana kanta za smeće pokazuje da električni i elektronski otpad (WEEE) treba da se odlaže odvojeno od običnog komunalnog otpada.
- Stari električni aparati mogu da sadrže otrovne supstance, tako da će pravilno odlaganje Vašeg starog aparata pomoći sprečavanju pojave negativnih posledica po životnu sredinu i zdravlje ljudi. Vaš stari aparat može da sadrži delove za višekratnu upotrebu koji se mogu koristiti za zamenu drugih proizvoda i druge vredne materijale koji se mogu reciklirati radi očuvanja ograničenih resursa.
- Vaš aparat možete da odnesete u radnju gde ste ga kupili ili da kontaktirate lokalnu vladinu kancelariju za otpad kako biste dobili informaciju o najbližoj autorizovanoj WEEE stanici za odlaganje ovog otpada. Za najnovije informacije za Vašu zemlju, molimo Vas da pogledate web stranicu www.lg.com/global/recycling.

SVENSKA

Bortskaffning av den gamla produkten

- Den överkorsade soptunnesymbolen indikerar att elektroniskt och elektriskt avfall (WEEE) ska sorteras separat från hushållsavfallet och lämnas in till en av kommunen anvisad plats för återvinning.
- Kasserade elektroniska och elektriska produkter kan innehålla farliga substanser, korrekt avfallshantering av produkten förhindrar negativa konsekvenser för miljön och den mänskliga hälsan. Din gamla produkt kan även innehålla återanvändningsbara delar som kan användas för att reparera andra produkter samt innehålla värdefulla ämnen som kan återvinnas för att spara jordens resurser.
- Du kan ta din gamla produkt till butiken där du köpte den eller kontakta din kommun för information om närmaste WEEE-uppsamlingsställe. För att få den senaste informationen för ditt land, gå till www.lg.com/global/recycling

Points de collecte sur www.quefairedemesdechets.fr
Privilégiez la réparation ou le don de votre appareil !

LG