Printing Specification

1. Specification

Models	1. Model Name:	QNED
	2. Suffix:	TR
	3. Part No:	MFL72097707
	4. REV	REV00
	5. Number of pages	16
	6. Folded/Unfolded	3 Folded
SIZE	7. Trim size (W x H)_Unfolded (mm)	296 x 420(+/-5)
	8. Trim size (W x H)_folded (mm)	148 x 105
	9. Bindery	-
COVER	10. Color (Cover)	-
	11. Paper (Cover)	-
	12. Weight (cover) (g/㎡)	-
INNER	13. Color (inner)	4(CMYK)
	14. Paper (inner)	Wood free
	15. Weight (inner) (g/㎡)	70(+/-10)
	16. Coating	No
	17. Thomson	No
	18. Sub-material	No
	19. Languages	ENG (1)

1.1 Folding / Cover

Folded Step

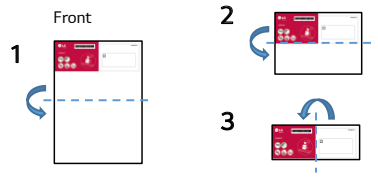

Folded

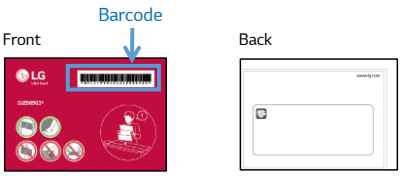

2. Origin Notification



Changes the Country name.

Printed in [Country Name in English]

Imprimé en(au) [Country Name in French]

[blank]

[

]

[Country Name] (ENG/FRE)

LGERS / LGEMX :	Printed in Mexico Imprimé au Mexique
LGEKR :	Printed in Korea Imprimé en Corée
LGEMA :	Printed in Poland Imprimé en Pologne
LGEND :	Printed in China Imprimé en Chine
LGEIN :	Printed in Indonesia Imprimé en Indonésie
Brazil :	Printed in [Each Contry name] [Image] (LGEAZ production only)
Others :	Each Country name.

NOTE

[Restriction of Hazardous Substances]

Hazardous substances on this product should be satisfied by substance regulation of Level A-I, A-II, SVHC according to LG(52)B—5011 standard.
Especially, Part should be followed and controlled the following specification.

(1) Hazardous substances test report should be submitted when part certification test and first mass production.

(2) Especially, Don't use or contain lead (Pb) and cadmium (Cd) in ink.

INK REQUIREMENT FOR EU

(1) The amount of MOAH/MOSH must be less than 0.1% of the weight of the INK used.

* MOAH(Mineral Oil Aromatic Hydrocarbons) : Consisting of 1 to 7 aromatic cycles
* MOSH(Mineral Oil Saturated Hydrocarbons) : Consisting of 16 to 35 carbon atoms

(2) From 01 January 2025 : Ban on the use of MOAH in INK up to a limit of one part per million(1ppm) for compounds of 3 to 7 aromatic cycles

3. History

Rev. Number	Date	Description	ECO Number	Owner	
REV07					
REV06					
REV05					
REV04					
REV03					
REV02					
REV01					
REV00	2024/01/25	-	-	Checked	Nitin H.
				Approved	Santosh C.
				Owner	Aditya K.

LG

MFL72097707 2401REV00

Quick Start Guide

65QNED90*
75QNED90*
86QNED90*





www.lg.com

Printed in India

⊕ : Depending on model ⊕ : Depending on country







65"





ⓐ x 4
(M4 x L16)

75/86"





ⓑ x 4
(M4 x L20)

Images and Accessory parts shown in manual may vary depending on model.

Unpacking

Check your product box for the following items. If there are any missing accessories, contact the local dealer where you purchased your product.
The illustrations in this manual may differ from the actual product and item.

65/75"

1

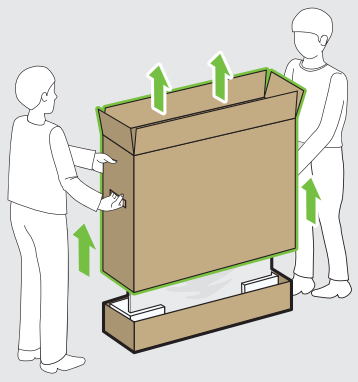

86"

1

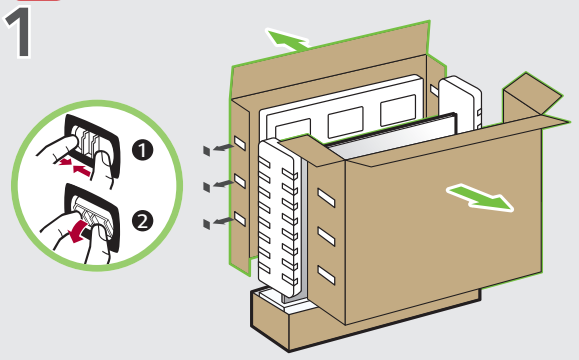

65/75/86"

2

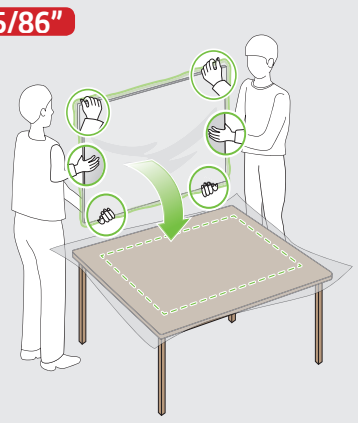

3

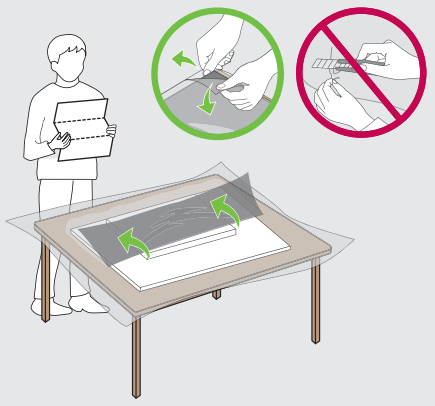

⚠CAUTION
Image shown may differ from your TV
When attaching the stand to the TV set, place the screen facing down on a cushioned table or flat surface to protect the screen from scratches

NOTE
Stand provided vary depending on model.

1

A **65/75/86"**

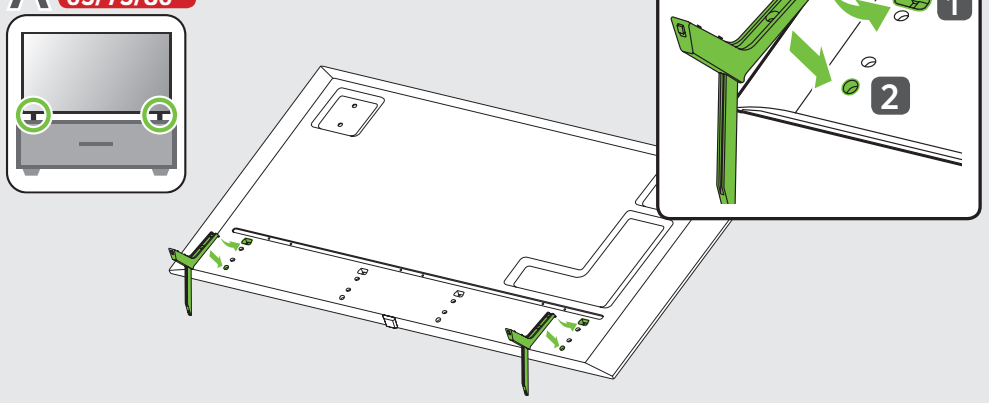

B **65/75"**

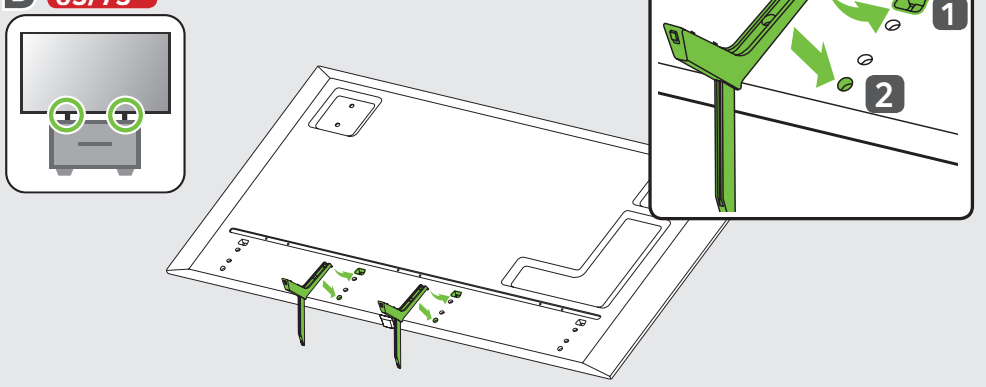

2

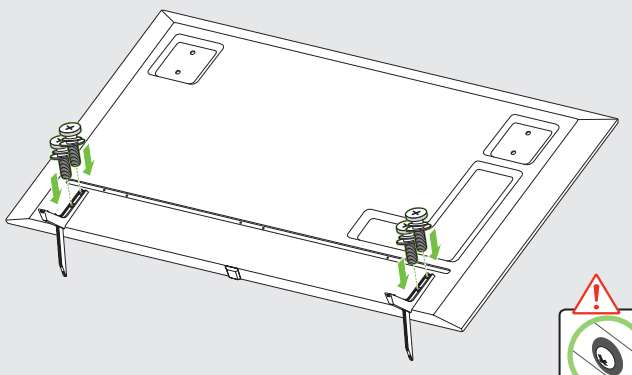



65"

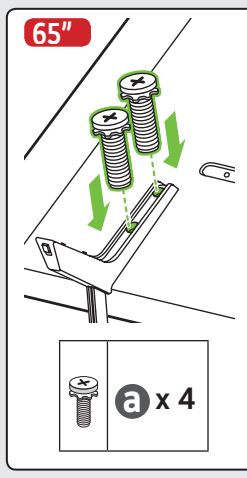

ⓐ x 4

75/86"

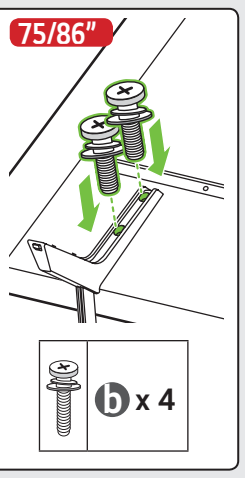

ⓑ x 4

3

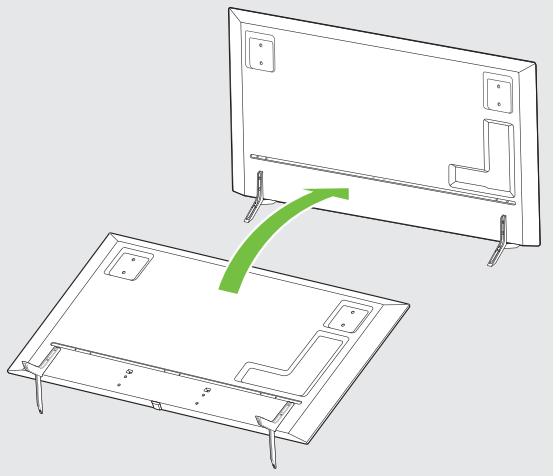

4

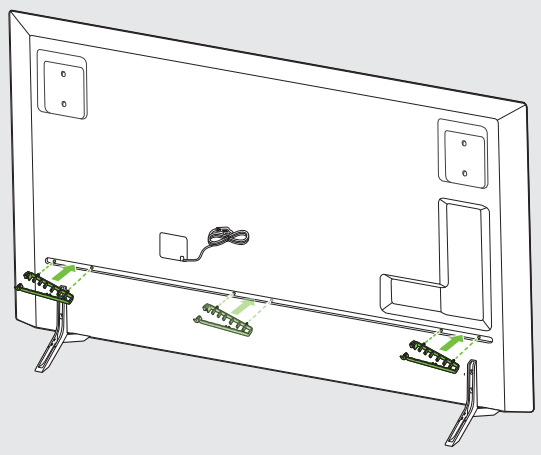

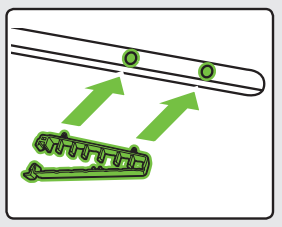

5

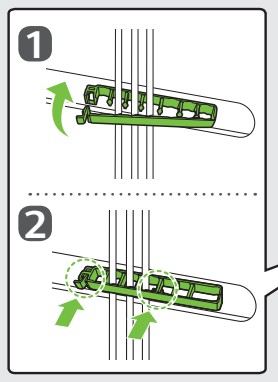

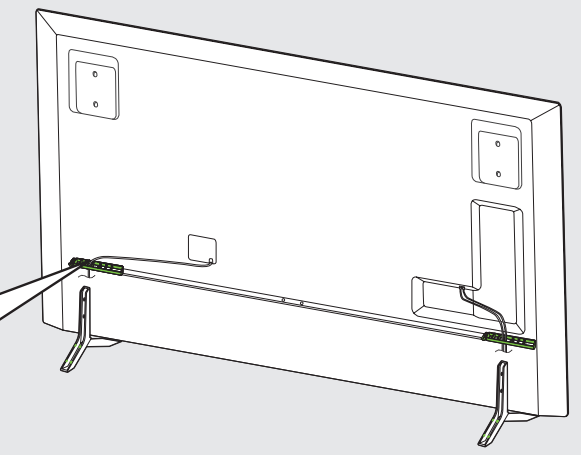



6

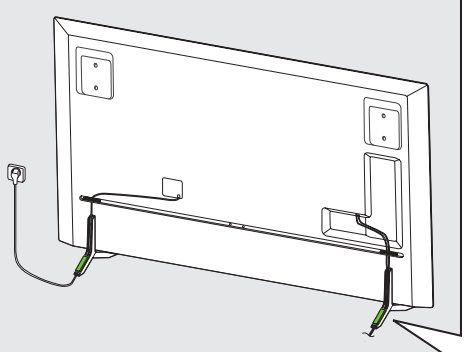

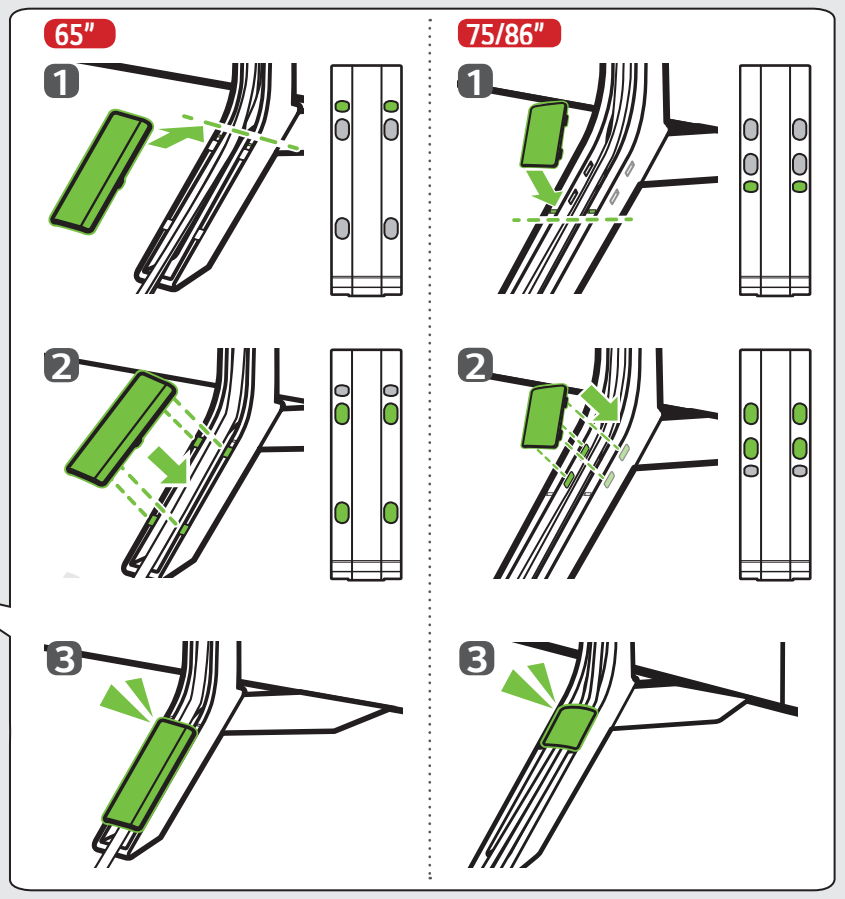

65/75/86"

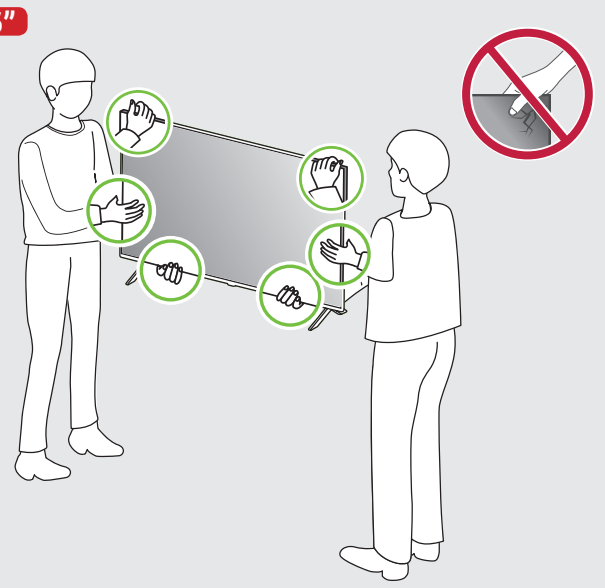



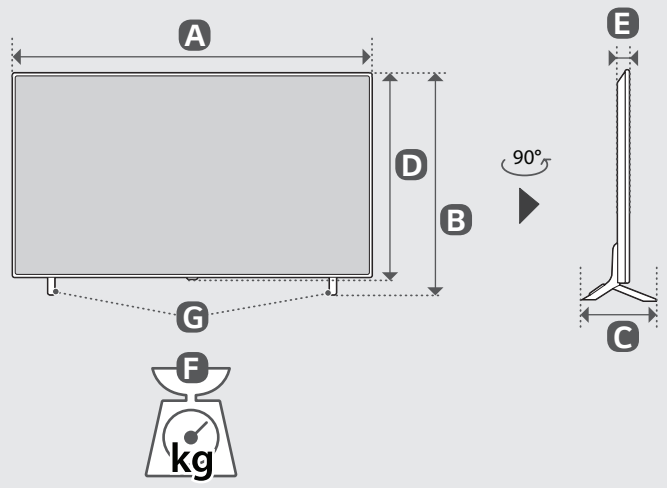

mm (inches)
kg (lbs)

MODELS	A	B	C	D	E	F	F - G	Power consumption
65QNED90*	1452 mm (57.1) inches	904 mm (35.5) inches	295 mm (11.6) inches	839 mm (33.0) inches	44.9 mm (1.7) inches	31.4 kg (69.2) lbs	31.0 kg (68.3) lbs	255 W
75QNED90*	1673 mm (65.8) inches	1027 mm (40.4) inches	359 mm (14.1) inches	963 mm (37.9) inches	44.9 mm (1.7) inches	42.9 kg (94.5) lbs	41.9 kg (92.3) lbs	310 W
86QNED90*	1925 mm (75.7) inches	1165 mm (45.8) inches	359 mm (14.1) inches	1105 mm (43.5) inches	46.1 mm (1.8) inches	59.1 kg (130.2) lbs	58.1 kg (128.0) lbs	415 W

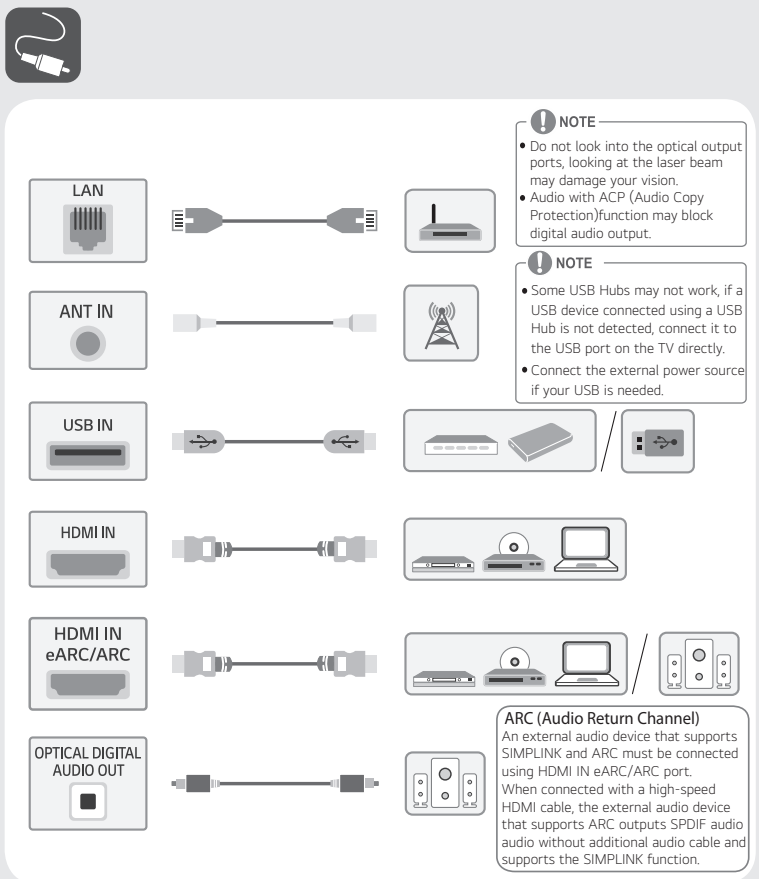

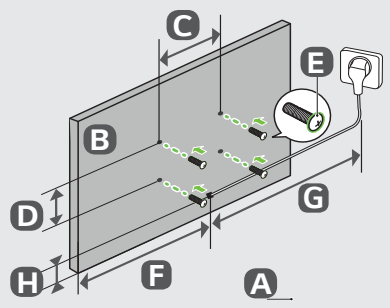

mm (inches)

A	B	C x D	E	F	G	H
Wallmount Bracket	65QNED90*	400 x 400 mm (15.7 x 15.7) inches	M6	466 mm (18.3) inches	≧1.5 m (59.0) inches	246 mm (9.6) inches
	75QNED90*	400 x 400 mm (15.7 x 15.7) inches	M6	585 mm (23.0) inches		243 mm (9.5) inches
	86QNED90*	600 x 400 mm (23.6 x 15.7) inches	M8	612 mm (24.1) inches		255 mm (10.0) inches

