MBM63560609

SIGNATURE KITCHEN SUITE





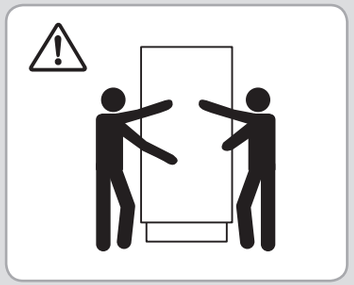

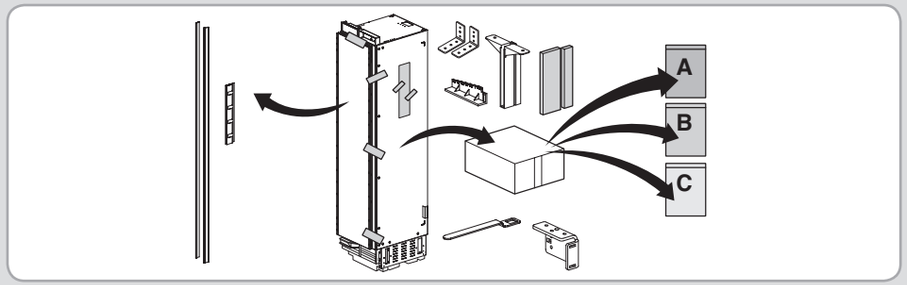

A



5X45



6X30



4X30

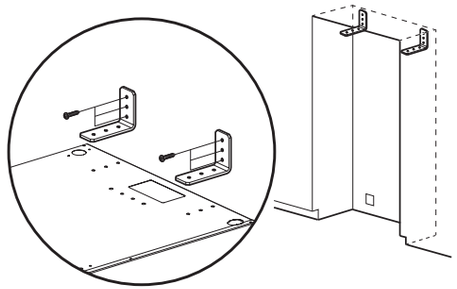

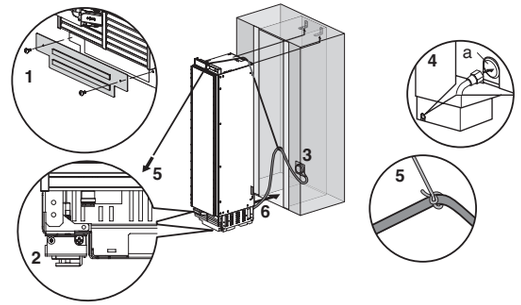

B

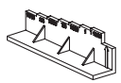



4X15



4X15

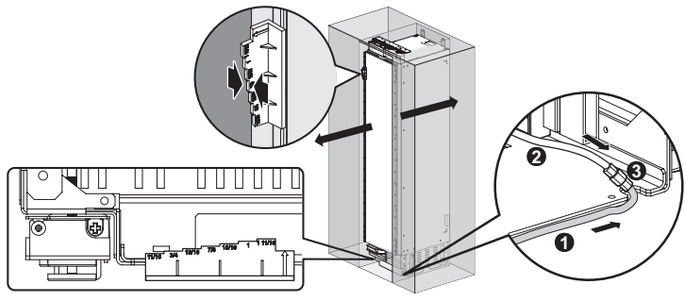

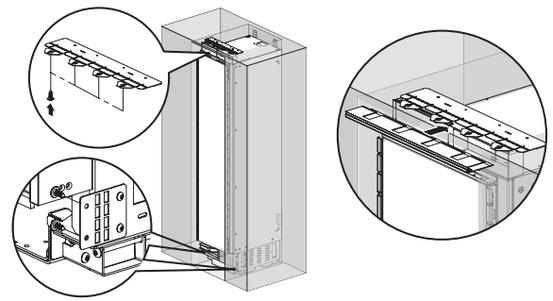

C

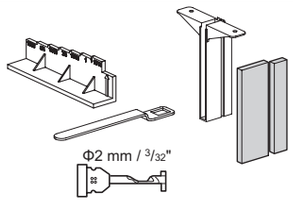

4X15



4X12

