LG

MFL72060556240 4REV00

75QNED99*
86QNED99*





www.lg.com

Printed in Korea
Imprimé en Corée

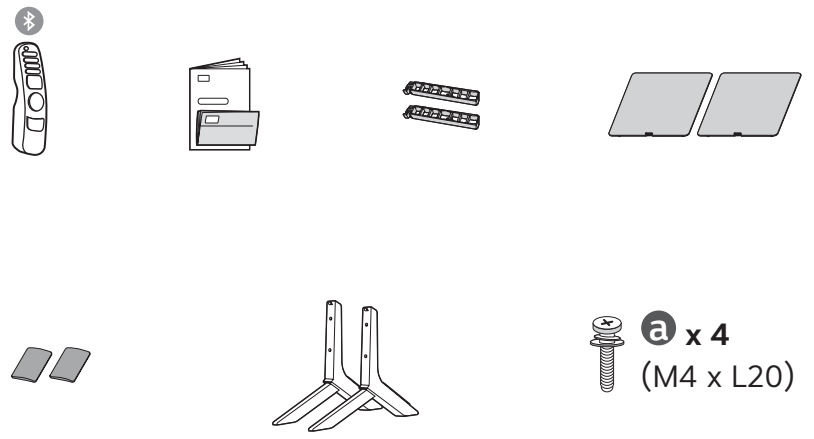

75"

1

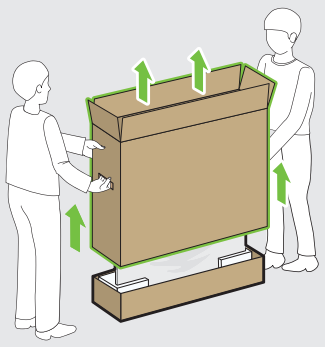

86"

1

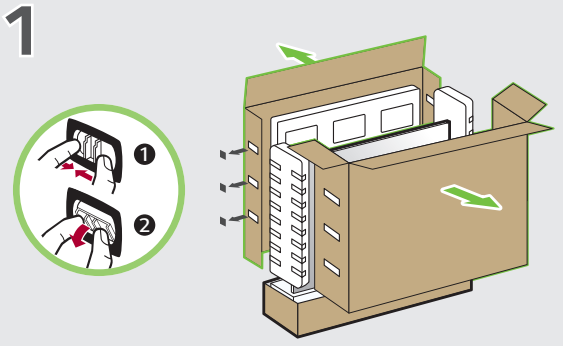

75/86"

2

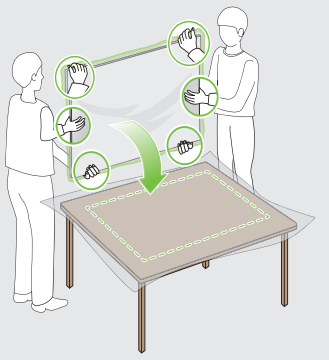

3

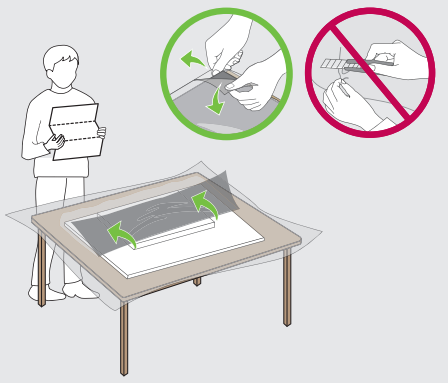

1

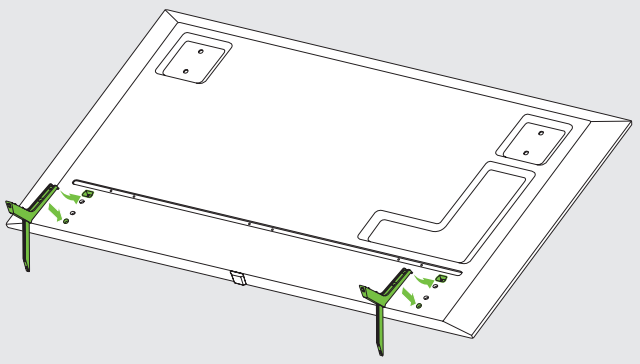

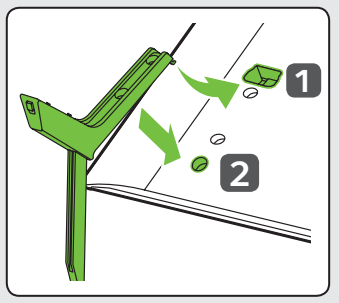

2

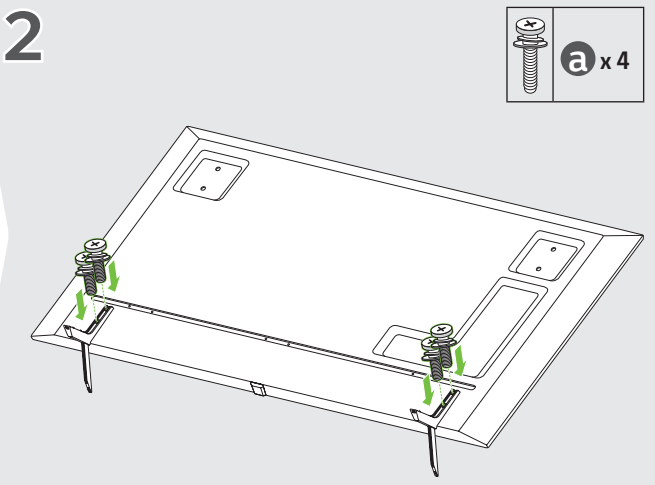

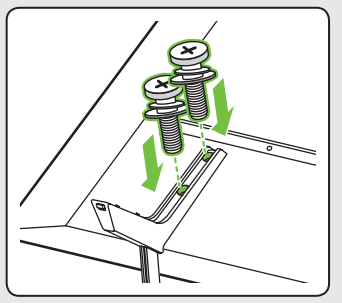



3

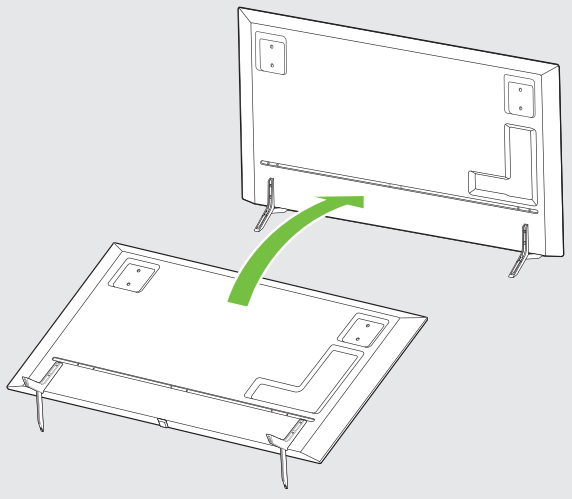

4

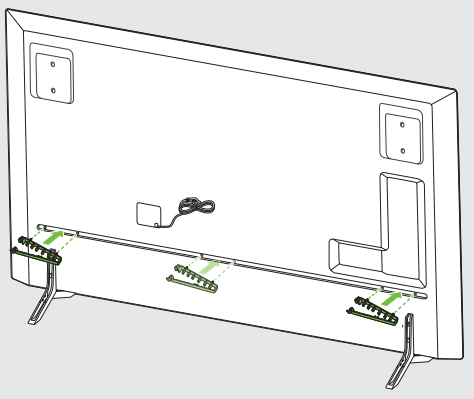

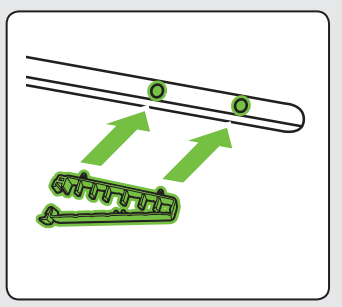

5

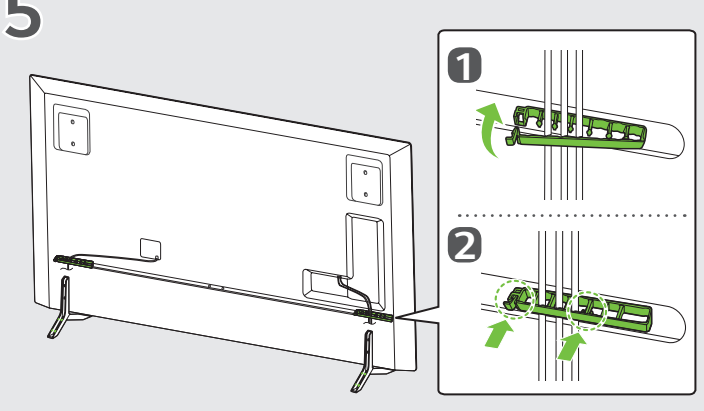

6

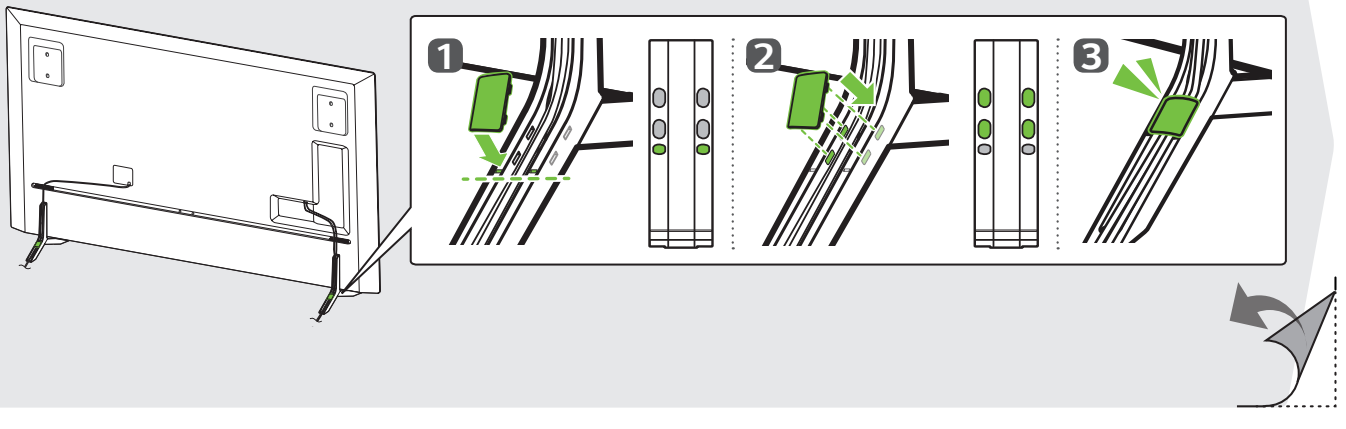

7

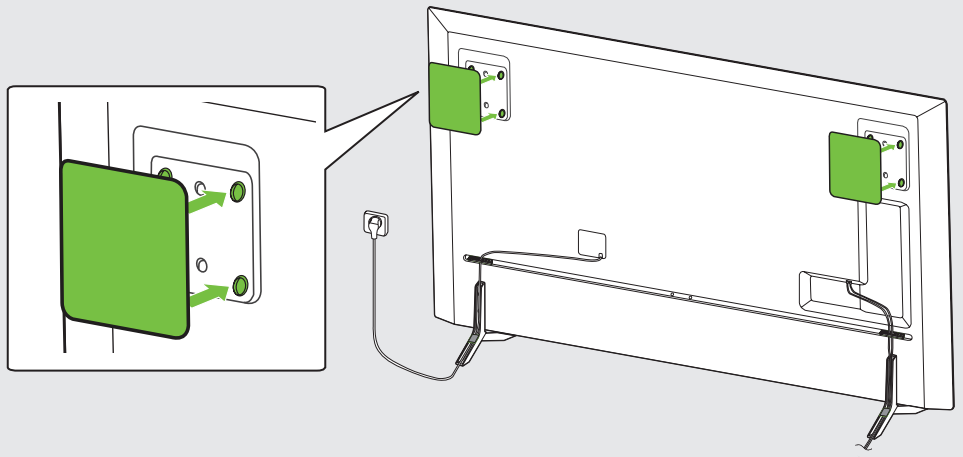

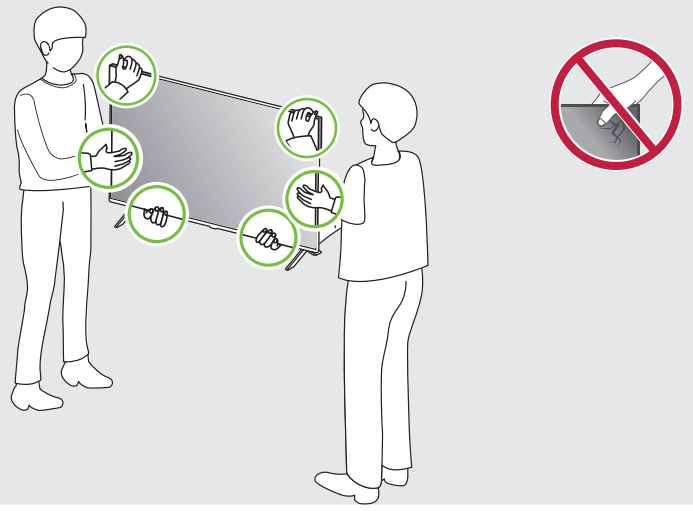

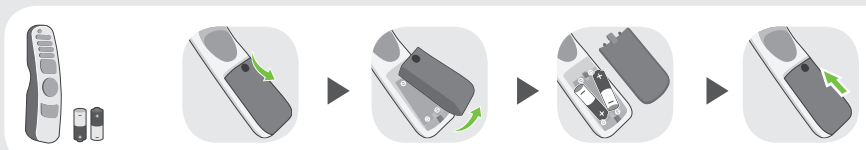

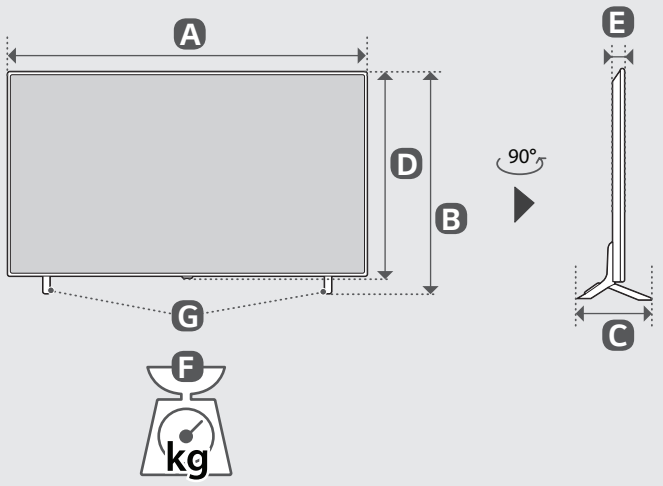

mm (inches / pulgadas / po)
kg (lbs / libras / lb)

	A	B	C	D	E	F	F-G	
75QNED99*	1 665 mm (65.5) inches	1 022 mm (40.2) inches	359 mm (14.1) inches	958 mm (37.7) inches	29.5 mm (1.1) inches	39.0 kg (85.9) lbs	38.0 kg (83.7) lbs	430 W
86QNED99*	1 917 mm (75.4) inches	1 162 mm (45.7) inches	359 mm (14.1) inches	1 098 mm (43.2) inches	29.9 mm (1.1) inches	55.9 kg (123.2) lbs	54.9 kg (121.0) lbs	545 W

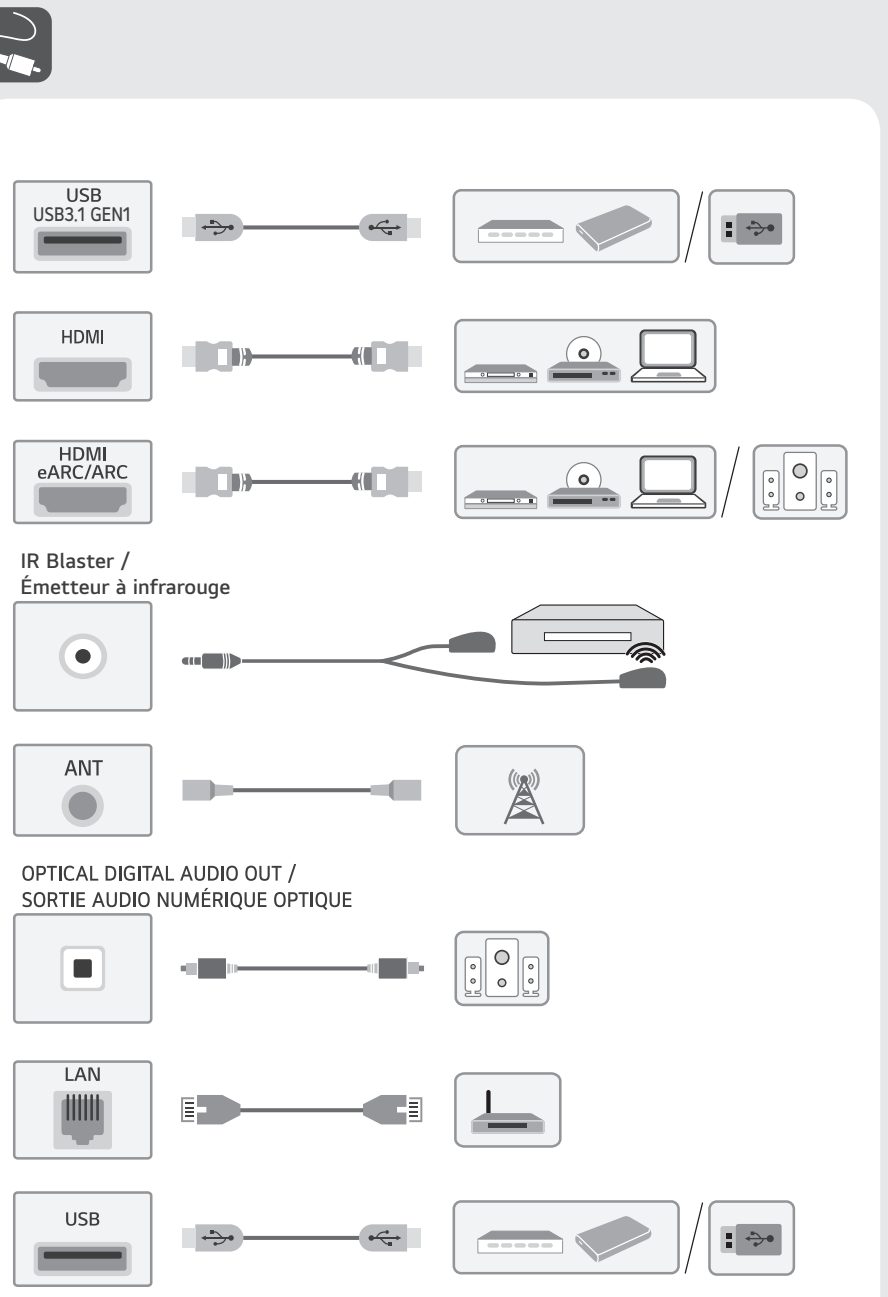

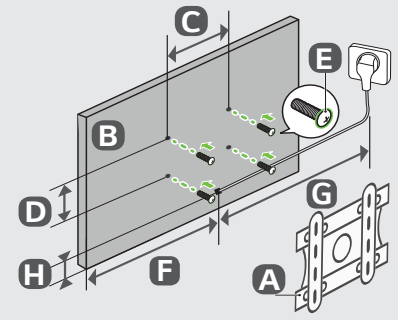

mm (inches / pulgadas / po)

A	B	C x D	E	F	G	H
WB24GCB	75QNED99*	400 x 400 mm (15.7 x 15.7) inches	M6	582 mm (22.9) inches	≧ 1.5 m (59.0) inches	237 mm (9.3) inches
WB24GDB	86QNED99*	600 x 400 mm (23.6 x 15.7) inches	M8	608 mm (23.9) inches		252 mm (9.9) inches

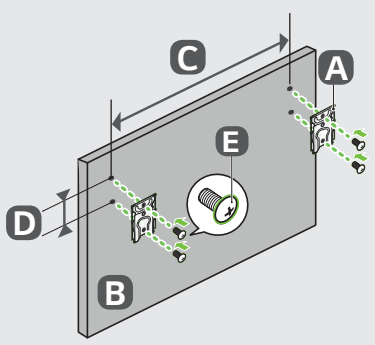

mm (inches / pulgadas / po)

A	B	C x D	E
WB21LGB	75QNED99*	1 281 x 125 mm (50.4 x 4.9) inches	M8
WB21LGB	86QNED99*	1 586 x 125 mm (62.4 x 4.9) inches	M8

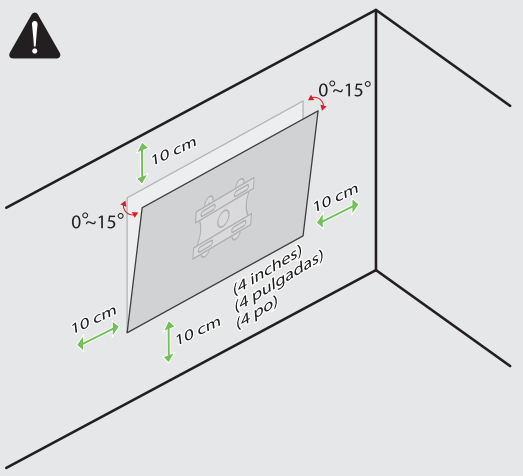

* : 0~9, A~Z