global_main.book.book Page 1 Sunday, October 16, 2022 2:28 PM

LG
Life's Good

Scan the QR code to see the manual.

OWNER'S MANUAL

WASHING MACHINE

Before beginning installation, read these instructions carefully. This will simplify installation and ensure that the product is installed correctly and safely. Leave these instructions near the product after installation for future reference.

ENGLISH

F6V910WTSA F6V910BTSA F6V909WTSA F6V909BTSA

Scan the QR code to check the video for more information.

www.lg.com

MFL71818824
Rev.02_101622

Copyright © 2021-2022 LG Electronics Inc. All Rights Reserved.

TABLE OF CONTENTS

This manual may contain images or content that may be different from the model you purchased.

This manual is subject to revision by the manufacturer.

SAFETY INSTRUCTIONS

CARING FOR THE ENVIRONMENT 5
Environmental and Economical Tips 5
Disposal of the Packaging Material 6
Disposal of Your Old Appliance 6

READ ALL INSTRUCTIONS BEFORE USE 6
Safety Messages 7

WARNING 7
Technical Safety 7
Maximum Capacity 8
Installation 8
Operation 9
Maintenance 10
Disposal 11

INSTALLATION

Parts and Specifications 12
Front View 12
Rear View 13
Specifications 14
Accessories 15

Installation Place Requirements 16
Installation Location 16
Wooden Floors (Suspended Floors) 16
Ventilation 17
Ambient Temperature 17
Electrical Connection 17

Unpacking the Appliance 18
Lifting the Appliance Off the Foam Base 18
Removing the Transit Bolt Assemblies 18

Levelling the Appliance 20
Checking the Level 20
Adjusting levelling feets 20

Using Anti-Slip Sheets....21

Connecting the Water Supply Hose 22

Note for Connection 22
Checking the Rubber Seal 22
Connecting the Hose to the Water Tap 22
Connecting the Hose to the Appliance....23

Installing the Drain Hose 24

Installing the Drain Hose with the Elbow Bracket 24

OPERATION

Operation Overview....25

Washing the Clothes....25

Control Panel 27

Control Panel Features 27

Preparing the Wash Load 30

Sorting the Clothes 30
Checking the Clothes Care Label....30
Checking the Clothes before Loading 30

Adding Detergents and Softeners....32

Detergent Dosage....32
Using the ezDispense drawer....32
Adding Detergent Tablets....35
Adding Water Softener 35

Programme Table....36

Washing Programme....36
Extra Options 38
Selectable Maximum Spin Speed 39
Consumption Data 40

Extra Options and Functions 42

Customizing a Washing Programme....42
Using Special Options....43
Using Basic Options 43
Using the ezDispense 44
Settings....47

SMART FUNCTIONS

LG ThinQ Application 49

LG ThinQ Application Features....49
Installing LG ThinQ App and Connecting an LG Appliance....50

Activating Network Connection....51
Using the Appliance Remotely....51
Deactivating Network Connection....51
Standby Power Consumption....51
Open Source Software Notice Information....52

Smart Diagnosis....53
Using LG ThinQ to Diagnose Issues....53
Using Audible Diagnosis to Diagnose Issues....53

MAINTENANCE

Cleaning After Every Wash....54
What to Clean....54
Cleaning the Exterior....54

Cleaning the Appliance Periodically....55
Tub Clean....55
Cleaning the Water Inlet Filter....55
Cleaning the Drain Pump Filter and Performing an Emergency Water Evacuation....56
Cleaning the ezDispense Drawer....56

TROUBLESHOOTING

Before Calling for Service....59
Error Messages....59
ezDispense Error Messages....61
Noises You Might Hear....62
Operation....63
Performance....65
Odour....66
ezDispense....67
Wi-Fi....68
Customer Care and Service....69

global_main.book.book Page 5 Sunday, October 16, 2022 2:28 PM

SAFETY INSTRUCTIONS

CARING FOR THE ENVIRONMENT

Environmental and Economical Tips

Energy and water consumption

- Water consumption and energy usage can be affected by the weight of the load. To make the best use of your appliance, load the maximum amount of dry clothes for the particular programme.
- The most efficient programmes in terms of energy consumption are generally those that perform at lower temperatures and longer duration.
- Noise and remaining moisture content are influenced by the spinning speed: the higher the spinning speed in the spinning phase, the higher the noise and the lower the remaining moisture content.
- Evenly loading laundry up to the capacity indicated by the manufacturer for the respective programmes will contribute to energy and water savings.
- For washing smaller amounts of clothes, the automatic load recognition system will help reduce the amount of water and energy usage.
- Use the Speed programme for small, lightly soiled loads.
- Cold water laundry detergents can be as effective at lower temperatures (about 20 °C). Using 20 °C settings will use less energy than 30 °C or higher temperatures.

Detergent

- Detergent should be chosen according to type, colour, soiling of the fabric and the washing temperature. And it should be used according to the instruction of the detergent manufacturer. Use only detergents that are suitable for Drum (front load) type washers.
- Use less detergent on smaller loads.
  - Partial load: 1/2 of the normal amount.
  - Minimum load: 1/3 of full load.

global_main.book.book Page 6 Sunday, October 16, 2022 2:28 PM

Selecting Extra Options and Functions

- Select the water temperature suitable for the type of load you are washing. Follow the garment fabric care labels for best results.
- The Pre Wash option is recommended for washing a heavily soiled load.

Disposal of the Packaging Material

- The packaging materials are designed to protect the appliance from unexpected damage during transportation.
- After installing the appliance, dispose of the packaging waste according to recycling symbols of material types. Put the packaging waste in relevant containers to recycle it.

Disposal of Your Old Appliance

- This crossed-out wheeled bin symbol indicates that waste electrical and electronic products (WEEE) should be disposed of separately from the municipal waste stream.
- Old electrical products can contain hazardous substances so correct disposal of your old appliance will help prevent potential negative consequences for the environment and human health. Your old appliance may contain reusable parts that could be used to repair other products, and other valuable materials that can be recycled to conserve limited resources.
- You can take your appliance either to the shop where you purchased the product, or contact your local government waste office for details of your nearest authorised WEEE collection point. For the most up to date information for your country, please see www.lg.com/global/recycling.

READ ALL INSTRUCTIONS BEFORE USE

The following safety guidelines are intended to prevent unforeseen risks or damage from unsafe or incorrect operation of the appliance.

global_main.book.book Page 7 Sunday, October 16, 2022 2:28 PM

The guidelines are separated into 'WARNING' and 'CAUTION' as described below.

Safety Messages

⚠	This symbol is displayed to indicate matters and operations that can cause risk. Read the part with this symbol carefully and follow the instructions in order to avoid risk.
⚠	**WARNING** This indicates that the failure to follow the instructions can cause serious injury or death.
⚠	**CAUTION** This indicates that the failure to follow the instructions can cause the minor injury or damage to the product.

WARNING

⚠ WARNING

To reduce the risk of explosion, fire, death, electric shock, injury or scalding to persons when using this product, follow basic precautions, including the following:

Technical Safety

- This appliance can be used by children aged from 8 years and above and persons with reduced physical, sensory or mental capabilities or lack of experience and knowledge if they have been given supervision or instruction concerning use of the appliance in a safe way and understand the hazards involved. Children shall not play with the appliance. Cleaning and user maintenance shall not be made by children without supervision.
- Children of less than 3 years should be kept away unless continuously supervised.
- If the power cord is damaged, it must be replaced by the manufacturer, its service agent or similarly qualified persons in order to avoid a hazard.

global_main.book.book Page 8 Sunday, October 16, 2022 2:28 PM

- Ventilation openings must not be obstructed by a carpet.
- This appliance is intended to be used in household only.
- Use a new hose or hose-set supplied with the appliance. Reusing old hoses can cause a water leak and subsequent property damage.
- The water pressure must be between 50 kPa and 800 kPa.

Maximum Capacity

The maximum capacity in some cycles for dry clothes to be used is:

F6V910WTSA F6V910BTSA	F6V909WTSA F6V909BTSA
10.5 kg	9 kg

The recommended maximum capacity for each washing programme may differ. To get good wash results, please refer to **Programme Table** in **OPERATION** chapter for further details.

Installation

- This appliance should only be transported by two or more people holding the appliance securely.
- Do not install the appliance in a damp and dusty place. Do not install or store the appliance in any outdoor area, or any area that is subject to weathering conditions such as direct sunlight, wind, rain, or temperatures below freezing.
- Make sure the power plug is completely pushed into the power outlet.
- Do not plug the appliance into multiple outlet sockets, power boards, or an extension power cable.
- Do not modify the power plug provided with the appliance. If it does not fit the power outlet, have a proper outlet installed by a qualified electrician.
- This appliance is equipped with a power cord having an equipment-earthing / grounding conductor (earthing pin) and a grounding power plug. The power plug must be plugged into an appropriate outlet socket that is installed and earthed / grounded in accordance with all local codes and ordinances.

global_main.book.book Page 9 Sunday, October 16, 2022 2:28 PM

- Improper connection of the equipment-grounding conductor can result in risk of electric shock. Check with a qualified electrician or service personnel if you are in doubt as to whether the appliance is properly grounded.

Operation

- Never attempt to operate the appliance if it is damaged, malfunctioning, partially disassembled, or has missing or broken parts, including a damaged cord or plug.
- Do not apply any sharp objects to the control panel in order to operate the appliance.
- Do not attempt to separate any panels or disassemble the appliance.
- Do not repair or replace any part of the appliance. All repairs and servicing must be performed by qualified service personnel unless specifically recommended in this Owner's Manual. Use only authorized factory parts.
- Do not push down the door excessively, when the appliance door is open.
- Do not put animals, such as pets into the appliance.
- Do not wash any items that are specified by the manufacturer as not washable on the care label.
- Keep the area underneath and around the appliance free of combustible materials such as lint, paper, rags, chemicals, etc.
- Do not leave the appliance door open. Children may hang on the door or crawl inside the appliance, causing damage or injury.
- Do not put in, wash or dry articles that have been cleaned in, washed in, soaked in, or spotted with combustible or explosive substances (such as waxes, wax removers, oil, paint, gasoline, degreasers, drycleaning solvents, kerosene, petrol, spot removers, turpentine, vegetable oil, cooking oil, acetone, alcohol, etc.). Improper use can cause fire or explosion.
- Do not use or store flammable or combustible substances (ether, benzene, alcohol, chemical, LPG, combustible spray, gasoline, thinner, petroleum, insecticide, air freshener, cosmetics, etc.) near the appliance.

global_main.book.book Page 10 Sunday, October 16, 2022 2:28 PM

- Never reach into the appliance while it is operating. Wait until the drum has completely stopped.
- Do not touch the door during a high temperature programme.
- In case of a water leak from the appliance or flood, disconnect the power plug and contact the LG Electronics customer information centre.
- Turn off water taps to relieve pressure on hoses and valves and to minimize leakage if a break or rupture should occur. Check the condition of the fill hoses; they should be replaced after 5 years.
- If there is a gas leakage (isobutane, propane, natural gas, etc.) within the home, do not touch the appliance or power plug and ventilate the area immediately.
- If the drain hose or inlet hose is frozen during winter, use it only after thawing.
- Keep all washing detergents, softener and bleach away from children.
- Do not touch the power plug or the appliance controls with wet hands.
- Do not bend the power cable excessively or place a heavy object on it.
- Avoid touching any water that is drained from the appliance during the wash.
- Make sure that drainage is working properly. If water is not drained properly, your floor may get flooded.
- When the air temperature is high and the water temperature is low, condensation may occur and thus wet the floor.
- Wipe off dirt or dust on the contacts of the power plug.

Maintenance

- Disconnect the appliance from the power supply before cleaning the appliance. Setting the controls to the OFF or stand by position does not disconnect this appliance from the power supply.
- Securely plug the power plug in the outlet socket after completely removing any moisture and dust.
- Do not spray water inside or outside the appliance to clean it.

global_main.book.book Page 11 Sunday, October 16, 2022 2:28 PM

- Never unplug the appliance by pulling on the power cable. Always grip the power plug firmly and pull straight out from the outlet socket.
- Only qualified service personnel from LG Electronics service centre should disassemble, repair, or modify the appliance.

Disposal

- Before discarding an old appliance, unplug it. Cut off the cable directly behind the appliance to prevent misuse.
- Dispose of all packaging materials (such as plastic bags and styrofoam) away from children. The packaging materials can cause suffocation.
- Cut off the power cord and remove the door before disposing of this appliance to avoid the danger of children or small animals getting trapped inside.

global_main.book.book Page 12 Sunday, October 16, 2022 2:28 PM

INSTALLATION

Parts and Specifications

NOTE

- Appearance and specifications may change without notice to improve the quality of the appliance.

Front View

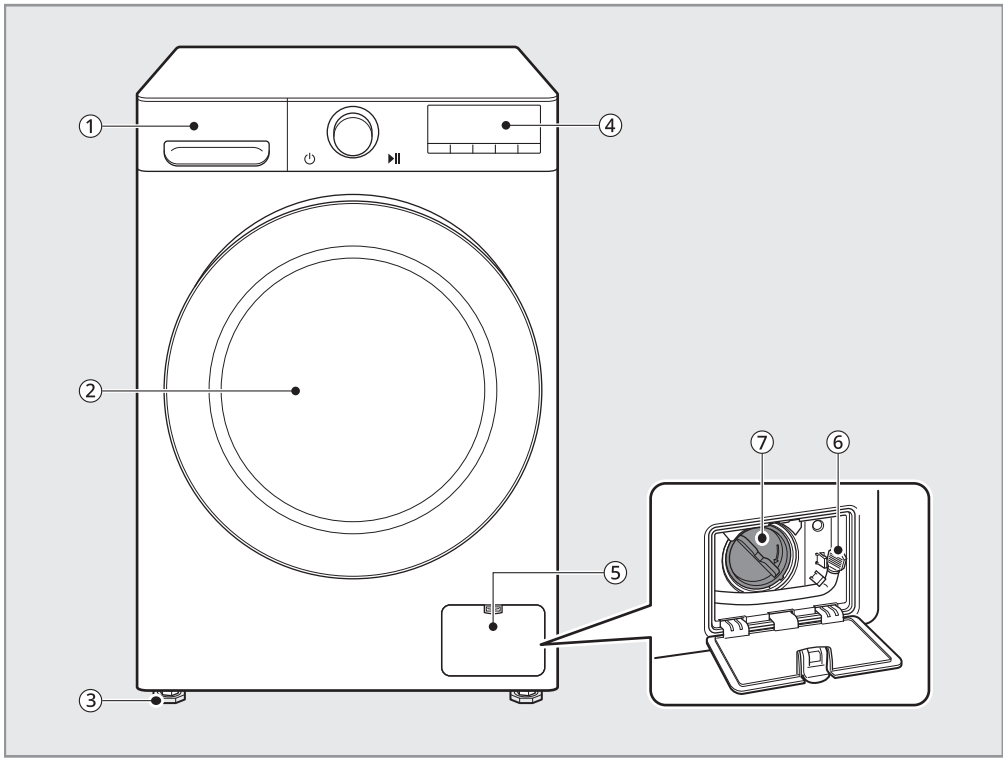

No.	Part Name	No.	Part Name
1	Detergent Dispenser Drawer	5	Cover Cap
2	Door	6	Drain Plug

global_main.book.book Page 13 Sunday, October 16, 2022 2:28 PM

③	Levelling Feet	⑦	Drain Pump Filger
④	Control Panel		

Rear View

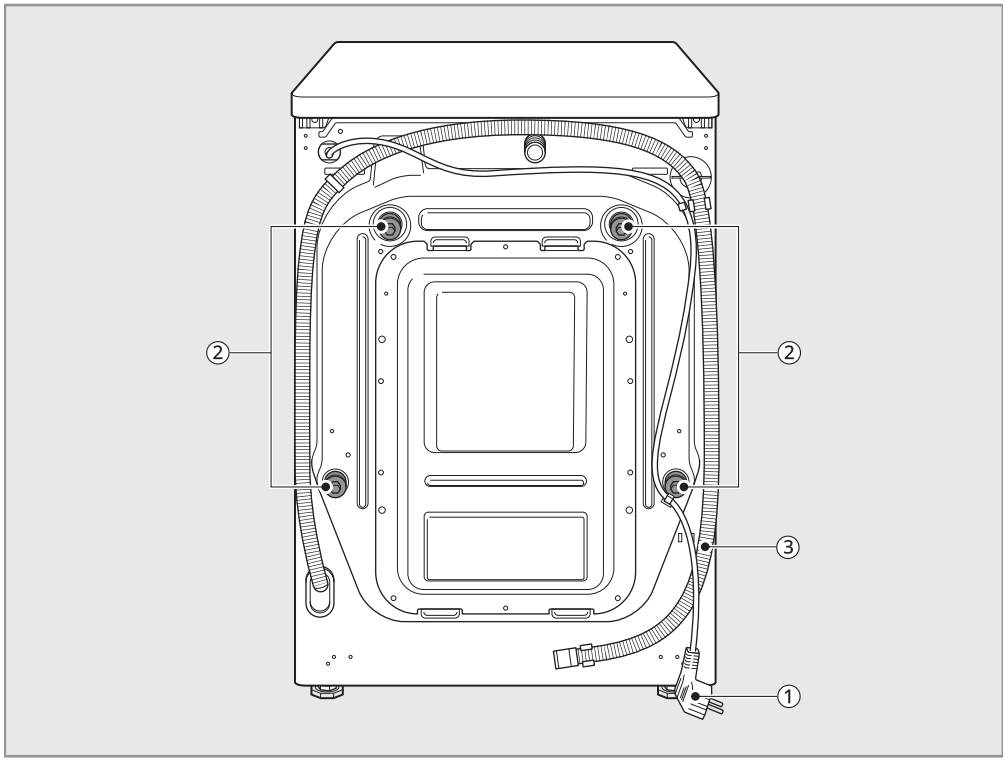

No.	Part Name	No.	Part Name
①	Power Plug	③	Drain Hose
②	Transit Bolts		

global_main.book.book Page 14 Sunday, October 16, 2022 2:28 PM

Specifications

Description	Value
Model Name	F6V910WTSA F6V910BTSA F6V909WTSA F6V909BTSA
Power Supply	220−240 V~, 50 Hz
Product Weight	70 kg

Dimension(mm)

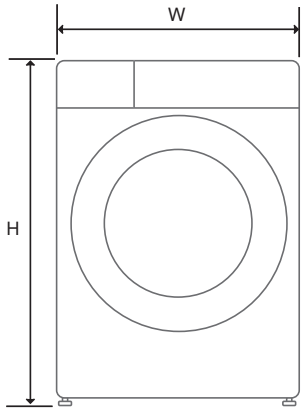

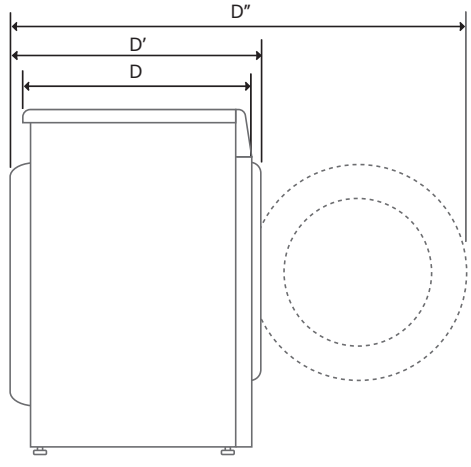

Index	Dimension (mm)
W	600
H	850
D	565
D'	620
D"	1100

global_main.book.book Page 15 Sunday, October 16, 2022 2:28 PM

Accessories

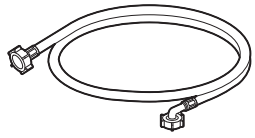 Cold Supply Hose	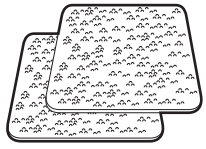 Anti–slip Sheets*1
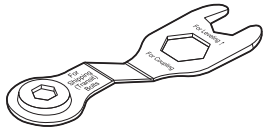 Spanner	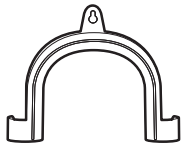 Elbow Bracket for Securing Drain Hose
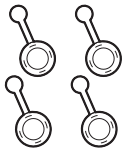 Caps for Covering Transit Bolt Holes	Tie Strap*1

*1 The included accessories vary depending on the model you purchased.

global_main.book.book Page 16 Sunday, October 16, 2022 2:28 PM

Installation Place Requirements

Before installing the appliance, check the following information to make sure that the appliance should be installed in a correct place.

Installation Location

- This appliance must be installed on firm flooring to minimize vibration during the spin cycle. Concrete flooring is best, being far less prone to vibration during the spin cycle than wooden floorboards or a carpeted surface.
- If it is impossible to avoid positioning the appliance next to a gas cooker or coal burning stove, an insulation (850 X 600 mm) covered with aluminum foil on the side facing the cooker or stove must be inserted between the two appliances.
- Ensure that when the appliance is installed, it is easily accessible for an engineer in the event of a breakdown.
- When installing the appliance, adjust all four feet using the transit bolt spanner provided to ensure the appliance is stable.
- Ensure that there is enough room for full opening of the appliance door.
- To ensure sufficient clearance for water inlet hoses, drain hose and airflow, allow minimum clearances of at least 20 mm at the sides and 100 mm behind the appliance. Be sure to allow for wall, door, or floor moldings that may increase the required clearances.

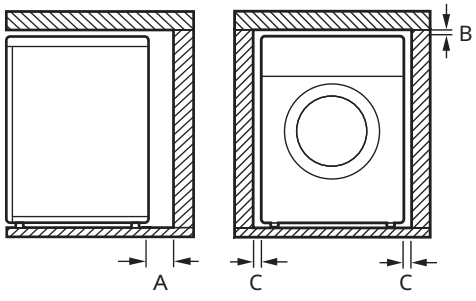

Index	Clearance (mm)
A	100
B	5
C	20

⚠ WARNING

- This appliance must only be used for domestic household purposes and should not be used in mobile applications.

Wooden Floors (Suspended Floors)

When installing the appliance on wooden floors, use rubber cups to reduce excessive vibration and unbalance. Timber or suspended type flooring may contribute to excessive

global_main.book.book Page 17 Sunday, October 16, 2022 2:28 PM

vibration and unbalance, errors and malfunction.

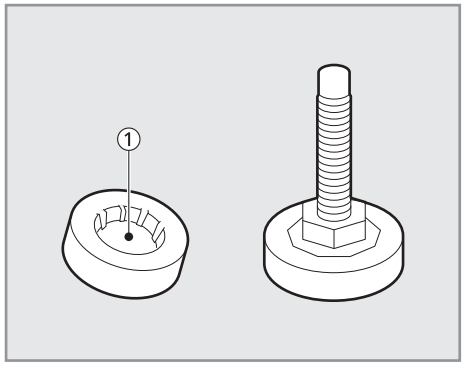

- To reduce vibration, we recommend placing at least 15 mm thickness of rubber cups ① under each adjusting foot of the appliance, secured to at least two floor beams with screws.
- If possible, install the appliance in one of the corners of the room, where the floor is more stable.
- Fit the rubber cups to reduce vibration.

⚠ CAUTION

- If the appliance is installed on the unstable floor (e.g. wooden floor), the warranty does not cover any damages and cost occurred due to the installation on the unstable floor.

NOTE

- You can purchase rubber cups (part No. **4620ER4002B**) from the LG service centre.

Ventilation

- Make sure that air circulation around the appliance should not be impeded by carpets, rugs, etc.

Ambient Temperature

- Do not install the appliance in rooms where freezing temperatures may occur. Frozen hoses may burst under pressure. The reliability of the electronic control unit may be impaired at temperatures below freezing point.
- If the appliance is delivered in winter and temperatures are below freezing, place the appliance at room temperature for a few hours before putting it into operation.

Electrical Connection

- Do not use an extension cord or double adapter.
- Always unplug the appliance and turn off the water supply after use.
- Connect the appliance to an earthed socket in accordance with current wiring regulations.
- The appliance must be positioned so that the plug is easily accessible.
- Power outlet must be within 1 meter of either side of the appliance.

⚠ WARNING

- Repairs to the appliance must only be carried out by qualified personnel. Repairs carried out by inexperienced persons may cause injury or serious malfunctioning. Contact your local authorised LG repairer.
- The power plug must be plugged into an appropriate outlet socket that is installed and grounded/earthed in accordance with all local codes and ordinances.

global_main.book.book Page 18 Sunday, October 16, 2022 2:28 PM

Unpacking the Appliance

Lifting the Appliance Off the Foam Base

After removing the carton and shipping material, lift the appliance off the foam base.

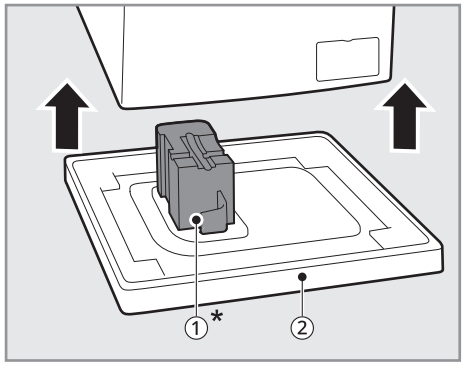

- Make sure the tub support ① * comes off with the base and is not stuck to the bottom of the appliance.
- If you must lay the appliance down to remove the carton base ② , always protect the side of the appliance and lay it carefully on its side. Do not lay the appliance on its front or back.

* This feature may vary depending on the model purchased.

Removing the Transit Bolt Assemblies

To prevent the appliance from severe vibration and breakage, remove transit bolts and retainers.

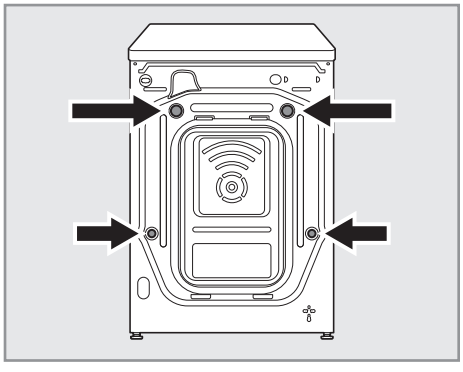

1 Starting with the bottom two transit bolts ①, use the spanner (included) to fully loosen all transit bolts by turning them counterclockwise.

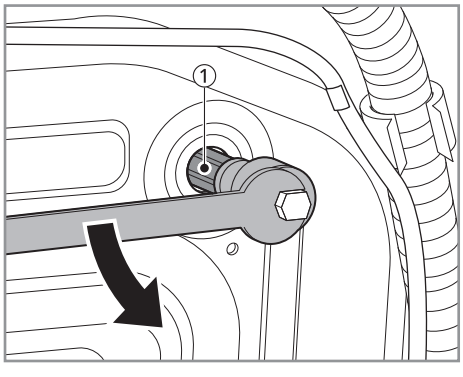

2 Remove the bolt assemblies by wiggling them slightly while pulling them out.

3 Install the hole caps.

global_main.book.book Page 19 Sunday, October 16, 2022 2:28 PM

- Locate the hole caps ② included in the accessory pack or attached on the back.

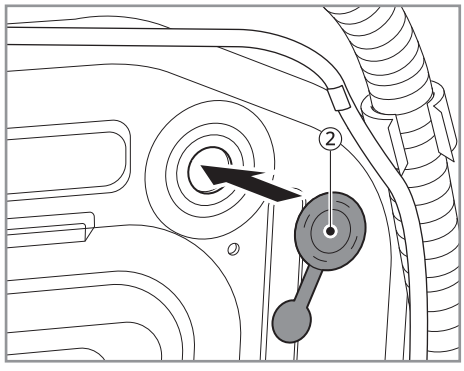

NOTE

- Save the transit bolts and retainers for future use.
- Transport this appliance for the prevention of breakage as below:
  - The transit bolts are reinstalled.
  - The power cord is secured to the back of the appliance.

global_main.book.book Page 20 Sunday, October 16, 2022 2:28 PM

Levelling the Appliance

Checking the Level

When pushing down the edges of the top plate diagonally, the appliance should not move up and down at all (check both directions).

- If the appliance rocks when pushing the top plate of the appliance diagonally, adjust the feet again.
- Check whether the appliance is perfectly level after installation.

NOTE

- Timber or suspended type flooring may contribute to excessive vibration and unbalance. Reinforcement or bracing of the timber floor may need to be considered to stop or reduce excessive noise and vibration.
- Never try to level any uneven floor by putting pieces of wood, cardboard or similar materials under the appliance.

Adjusting levelling feets

When installing the appliance, the appliance should be aligned and perfectly level. If the appliance is not aligned and level properly, the appliance may be damaged or may not operate properly.

1 Turn the levelling feet as required if the floor is uneven.
   - Do not insert pieces of wood etc. under the feet.
   - Make sure that all four feet are stable and resting on the floor.

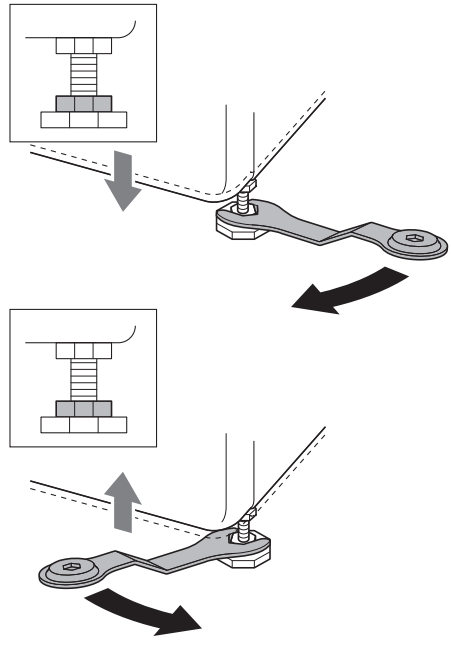

NOTE

- Do not install the washing machine on a plinth, stand or elevated surface unless it is manufactured by LG Electronics for use with this model.

2 Check if the appliance is perfectly level using a spirit level ①.

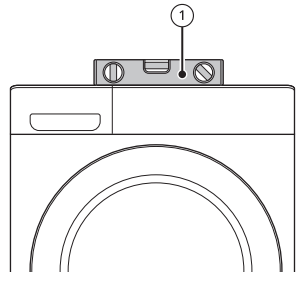

global_main.book.book Page 21 Sunday, October 16, 2022 2:28 PM

3 Secure the levelling feet with the lock nuts ② by turning anti-clockwise against the bottom of the appliance.

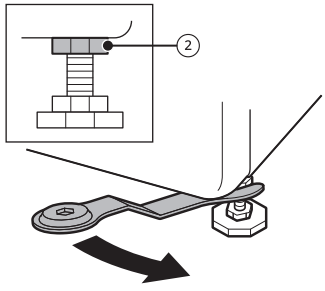

4 Check if all lock nuts at the bottom of the appliance are secured properly.

NOTE

- Proper placement and levelling of the appliance will ensure long, regular, and reliable operation.
- The appliance must be 100% horizontal and stand firmly in position on a hard flat floor.
- It must not 'Seesaw' across corners under the load.
- Do not let the feet of the appliance get wet. Failure to do so may cause vibration or noise.

Using Anti-Slip Sheets

This feature may vary depending on the model purchased.

If you install the appliance on a slippery surface, it may move because of excessive vibration. Incorrect levelling may cause malfunction through noise and vibration. If this occurs, install the anti-slip sheets under the levelling feet and adjust the level.

1 Clean the floor to attach the anti-slip sheets.

- Use a dry rag to remove and clean foreign objects and moisture. If moisture remains, the anti-slip sheets may slip.

2 Adjust the level after placing the appliance in the installation area.

3 Place the adhesive side ① of the anti-slip sheets on the floor.

- The most effective way is to install the anti-slip sheets under the front feet. If it is difficult to place the sheets under the front feet of the appliance, attach them under the rear feet.

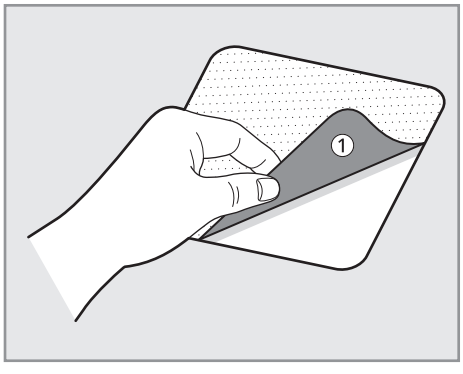

4 Put the appliance on the anti-slip sheets.

- Do not attach the adhesive side ① of anti-slip sheets to the feet of the appliance.

NOTE

- Additional anti-slip sheets are available at LG Electronics service centre.

global_main.book.book Page 22 Sunday, October 16, 2022 2:28 PM

Connecting the Water Supply Hose

Note for Connection

- Water pressure must be between **50 kPa** and **800 kPa** (0.5–8.0 kgf/cm^2). If the water pressure is more than **800 kPa**, a decompression device should be installed.
- Periodically check the condition of the water supply hose and replace the water supply hose if necessary.

NOTE

- Do not overtighten the water supply hose or use mechanical devices to tighten onto the inlet valves.
- No further backflow protection required for connection to the water inlet.

Checking the Rubber Seal

Two rubber seals ① are supplied with the water supply hose. They are used to prevent water leaks. Connection to taps is sufficiently tight.

- Do not use mechanical devices such as multi grips to tighten the water supply hose. Ensure that the curved end of the water supply hose is connected to the appliance.

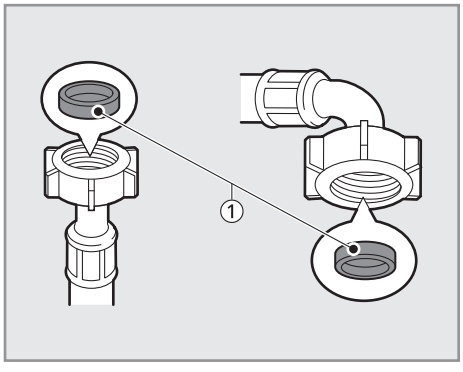

Connecting the Hose to the Water Tap

Connecting Screw-Type Hose to Tap with Thread

Screw the supply hose connector onto the water supply tap. Hand tighten only with the aid of a soft cloth. Do not overtighten the supply hose with any mechanical device.

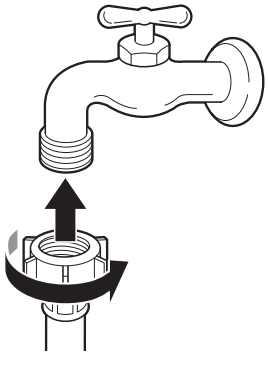

NOTE

- After connecting the water inlet hose to the water tap, turn on the water tap

global_main.book.book Page 23 Sunday, October 16, 2022 2:28 PM

to flush out foreign substances (dirt, sand, sawdust, and etc.) in the water lines. Let the water drain into a bucket, and check the water temperature.

Connecting the Hose to the Appliance

Screw the supply hose to the water inlet valve on the back of the appliance.

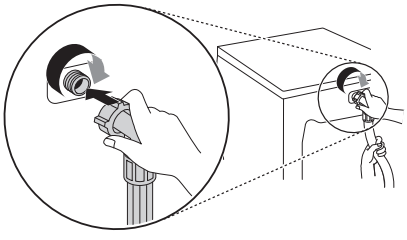

- Do not connect the hose to the hot water supply for models with one water inlet. Connect to the cold water supply only.

NOTE

- After completing connection, if water leaks from the hose, repeat the same steps. Use the most conventional type of tap for the water supply. In case that the tap is square or too big, remove the guide plate before inserting the tap into the adaptor.
- Make sure that the hose should not be kinked or trapped.

global_main.book.book Page 24 Sunday, October 16, 2022 2:28 PM

Installing the Drain Hose

Installing the Drain Hose with the Elbow Bracket

The drain hose should not be placed higher than **100 cm** above the floor. Water in the appliance may not drain or may drain slowly.

- Securing the drain hose correctly will protect the floor from damage due to water leakage.

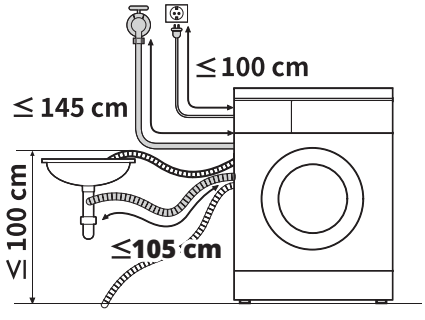

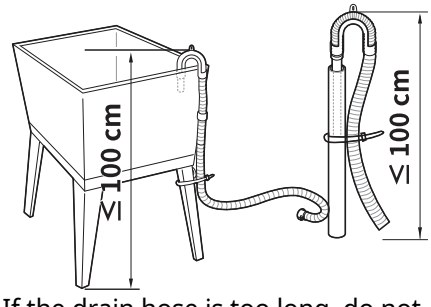

- If the drain hose is too long, do not force it back into the appliance. This will cause abnormal noise.
- When installing the drain hose to a sink, secure it tightly with string.

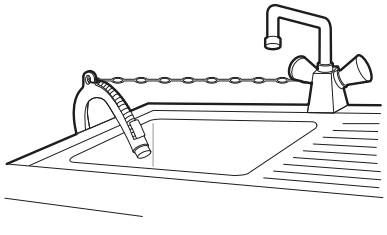

global_main.book.book Page 25 Sunday, October 16, 2022 2:28 PM

OPERATION

Operation Overview

Washing the Clothes

Before the first wash, select the **Cotton** wash programme and add a half amount of the detergent. Start the appliance without clothes. This will remove possible residues and water from the drum that may have been left during manufacturing.

1 Sort clothes by fabric type, soil level, colour and load size as needed.

2 Open the door and load items into the appliance.

⚠ CAUTION

- Before closing the door, ensure that all clothes and items are inside the tub and not overhanging on the rubber door seal where they will become caught when the door is closed. Failing to do so will cause damage to the door seal and the clothes.

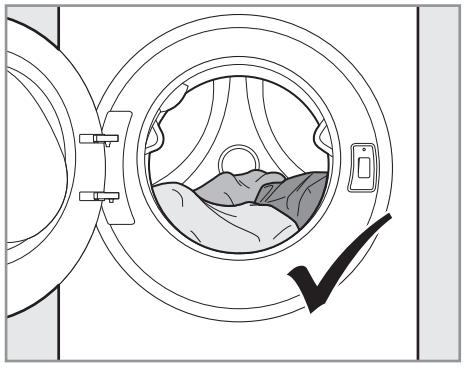

3 Close the door.

⚠ CAUTION

- Remove items from the flexible door seal gasket to prevent clothing and door seal damage.

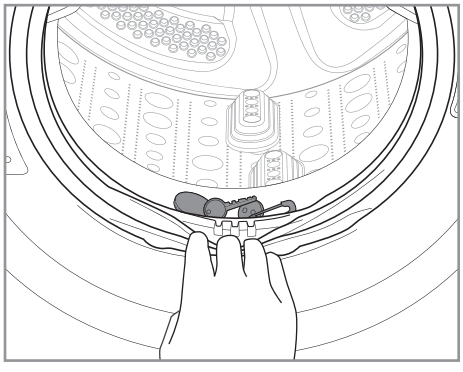

4 Add cleaning products or detergents and softeners to the appropriate compartment of the dispenser.

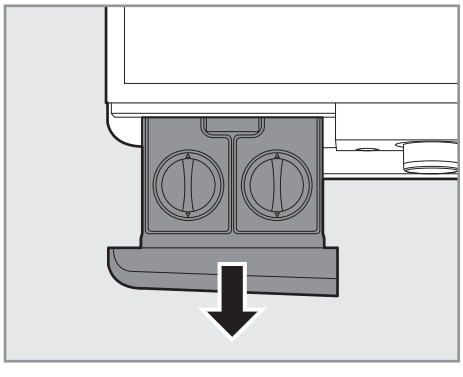

ENGLISH

global_main.book.book Page 26 Sunday, October 16, 2022 2:28 PM

5 Press the **Power** button to turn on the appliance.

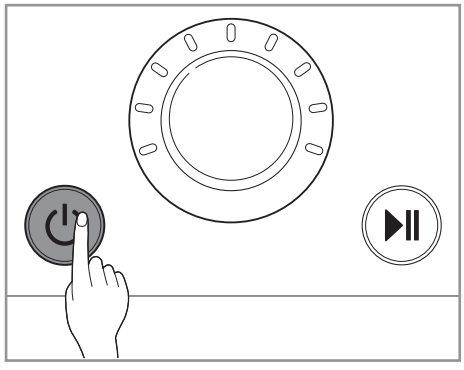

6 Choose the desired programme.

- Press the programme button repeatedly or turn the programme knob until the desired programme is selected.
- Now select a wash temperature and spin speed. Pay attention to the fabric care label of your clothes.

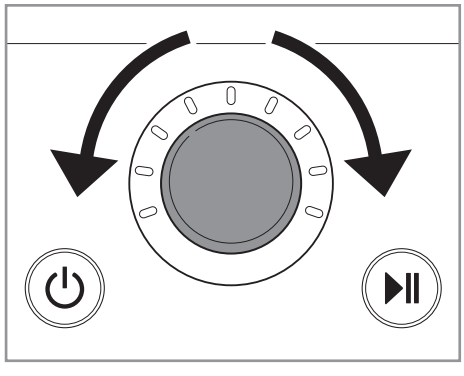

7 Begin programme.

- Press the **Start/Pause** button to begin the programme. The appliance will agitate briefly without water to measure the weight of the load. If the **Start/Pause** button is not pressed within a certain time, the appliance will shut off and all settings will be lost.

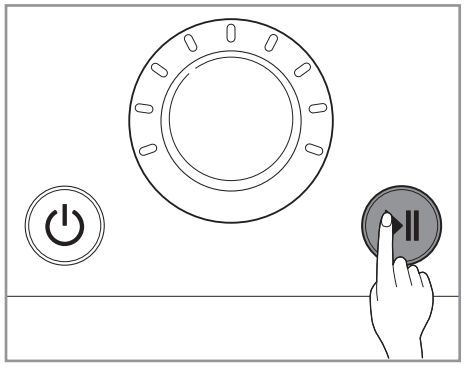

NOTE

- In the following case, the door will not open even if you pause the washing programme or turn the washing machine off.
  - When the washing machine starts a washing programme and has water inside the drum, the door will not open in order to prevent a flood until the washing machine drains the water completely.

8 End of programme.

- When the programme is finished, a melody will sound. Immediately remove your clothing from the appliance to reduce wrinkling.

global_main.book.book Page 27 Sunday, October 16, 2022 2:28 PM

Control Panel

The actual control panel may differ from model to model.

Control Panel Features

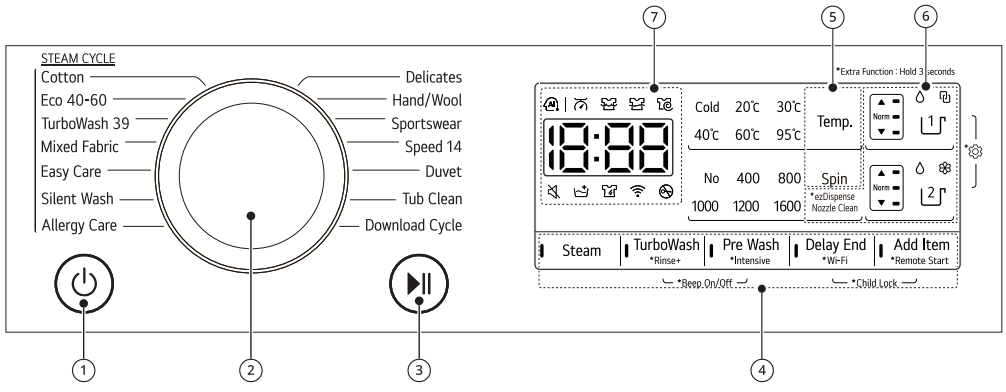

① Power On/Off Button

- Press this button to turn the washing machine on.

② Programme Knob

- Programmes are available according to the clothes type.
- The lamp will light up to indicate the selected programme.

③ Start/Pause Button

- This button is used to start the wash cycle or pause the wash cycle.
- If a temporary stop of the wash cycle is needed, press this button.

④ Extra Options and Functions

- To use the extra functions, press and hold the corresponding button for 3 seconds. The corresponding symbol lights up in the display.
- This allows you to select an additional programmes and will light when selected.

Remote Start

With the **LG ThinQ** app, you can use a smartphone to control your appliance remotely.

- In order to use this function, refer to **SMART FUNCTIONS**.

Wi-Fi

Press and hold the **Delay End** button for 3 seconds to initiate the connection of the appliance to the **LG ThinQ** application.

⑤ Customizing Washing Programme Buttons

Use these buttons to adjust the water temperature or spin speed settings for the selected programme.

- The current settings are shown in the display.
- Press the button for that option to select other settings.

global_main.book.book Page 28 Sunday, October 16, 2022 2:28 PM

⑥ ezDispense Buttons

- Press the **Dispenser 1** or **Dispenser 2** to select ezDispense function.
- LED will light up to indicate the selected detergent type and amount.
- When the detergent or softener is insufficient;
  - In case of pressing the **Power** button : The LED will blink and the chime will sound.
  - In case of running the appliance : The LED will blink .

ezDispense Nozzle Clean

- Press and hold the **Spin** button for 3 seconds to use the **ezDispense Nozzle Clean** function. Use this function to change the type of detergent or softener. This function cleans residual detergent or softener in the hose connected to the **ezDispense**(when changing the type of detergent or softener).

⑦ Display

- The display shows the settings, estimated remaining time, options, and status messages. When the appliance is turned on, the default settings in the display will illuminate.
- While the load weight is sensed automatically, the display on the control panel blinks.

global_main.book.book Page 29 Sunday, October 16, 2022 2:28 PM

Time and Status Display

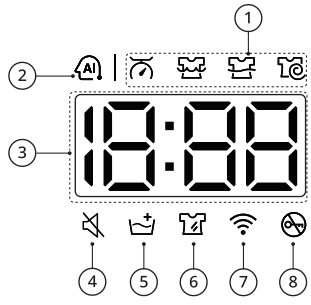

① Programme Status Indicators

- When a washing programme is running, LED for the active stage will blink, and the LEDs for the remaining stages will remain steady. Once a stage is complete, the LED will turn off. If a cycle is paused, the active stage LED will stop blinking.

② AI DD

- **AI DD** provides the appropriate drum rotation actions after load sensing is completed.
- is activated when the **Cotton**, **Mixed Fabric**, and **Easy Care** programmes are selected and operated.
  - If too much detergent is used, too many suds can occur and this will cause poor **AI DD** performance.

③ Estimated Time Remaining

- When a washing programme is selected, the default time for that programme is displayed. This time will change as options are selected.
- If the display shows `---` , then the time will be displayed after the load sensing has detected the load size. This is normal.
- The time shown is only an estimate. This time is based on normal operating conditions. Several external factors (load weight, room temperature, incoming water temperature, etc.) can affect the actual time.

④ Beep off Indicator

lights up when the beep is off.

⑤ Rinse+ Indicator

lights up when the **Rinse+** option is activated.

⑥ Intensive Indicator

lights up when the **Intensive** option is activated.

⑦ Wi-Fi Indicator

lights up when the appliance is connected to Wi-Fi network at home.

⑧ Door Lock Indicator

lights up when the programme starts and the door is locked.

global_main.book.book Page 30 Sunday, October 16, 2022 2:28 PM

Preparing the Wash Load

Sort the wash load for best washing results, and then prepare the clothes according to the symbols on their care labels.

Sorting the Clothes

- Soil level (Heavy, Normal, Light): Separate clothes according to soil level. If possible, do not wash heavily soiled items with lightly soiled ones.
- Colour (White, Lights, Darks): Wash dark or dyed clothes separately from whites or light colours. Mixing dyed clothes with light clothes can result in dye transfer or discolouration of lighter clothes.
- Lint (Lint producers, Collectors): Wash separately lint producing fabrics from lint collecting fabrics. Lint producers can result in pilling and linting on the lint collectors.

Checking the Clothes Care Label

The symbols tell you about the fabric content of your garment and how it should be washed.

Symbols on the Care Labels

Symbol	Wash / Fabric type
	• Normal Wash • Cotton, Mixed Fabrics
	• Easy Care • Synthetic, Mixed Fabrics
	• Special Delicate Wash • Delicates
	• Hand Wash Only • Wool, Silk
	• Do not wash

NOTE

- The dashes under the symbol give you information about the type of fabric and the maximum allowance of mechanical stress.

Checking the Clothes before Loading

- To help distribute the load evenly during spinning, combine large and small items in a load.
- Do not wash single small items. Add 1-2 similar items to the load to prevent an out-of-balance load.
- Check all pockets to make sure that they are empty. Items such as nails, hair clips, matches, pens, coins and keys can damage both your appliance and clothes.

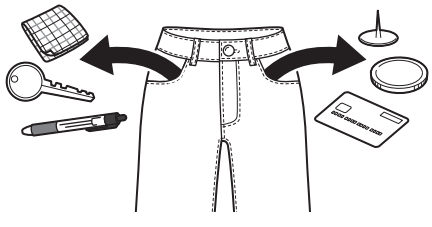

- Wash delicates (stockings, underwired bras) in a wash net.
- Close zippers, hooks and strings to make sure that these items do not snag on other clothes.

global_main.book.book Page 31 Sunday, October 16, 2022 2:28 PM

- Pre-treat dirt and stains by brushing a small amount of detergent dissolved water onto stains to help lift dirt.

global_main.book.book Page 32 Sunday, October 16, 2022 2:28 PM

Adding Detergents and Softeners

Detergent Dosage

- Detergent should be used according to the instruction of the detergent manufacturer and selected according to type, colour, soiling of the fabric and the washing temperature. Use only detergents that are suitable for Drum (front load) type washers.
- If too many suds occur, reduce the detergent amount.
- If too much detergent is used, too many suds can occur and this will result in poor washing results or cause heavy load to the motor.
- If you wish to use liquid detergent, follow the guidelines provided by the detergent manufacturer.
- You can pour liquid detergent directly into the main detergent drawer if you are starting the wash cycle immediately.
- If you select the **Pre Wash** option after adding the detergent directly into the drum, the detergent may be washed away, reducing the washing performance. For best results, use the **Pre Wash** option with the **ezDispense** function. The manual dispenser cannot be used for dispensing pre-wash detergent.
- Detergent usage may need to be adjusted for water temperature, water hardness, size and soil level of the load. For best results, avoid overdosing the detergent. Failing to do so will cause oversudsing.
- Refer to the label of the clothes, before adding the detergent and choosing the water temperature.
- Use only suitable detergents for the respective type of clothing:
  - Liquid detergent is often designed for special applications, e.g. for coloured fabric, wool, delicate or dark clothes.
  - Powdered detergent is suitable for all types of fabric.
  - For better washing results of white and pale garments, use powdered detergent with bleach.
  - Detergent is flushed from the dispenser at the beginning of the wash cycle.

NOTE

- Do not let the detergent harden. Doing so may lead to blockages, poor rinse performance or odour.
- Full load: According to manufacturer’s recommendation.
- Part load: 1/2 of the normal amount.
- Minimum load: 1/3 of full load.

Using the ezDispense drawer

When the **ezDispense** function is turned on, the liquid detergent and softener are dispensed in the set amounts, at the appropriate time during the cycle.

- A full detergent compartment will last for about 20 standard cycles, with the drum loaded halfway up with clothes.
- The default settings are configured to dispense **42 ml** of detergent and **30 ml** of softener for **4-6 kg** of normally soiled laundry. This can be changed using the (Dispenser 1) or (Dispenser 2) button. Please refer to **Extra Options and Functions** in **OPERATION** chapter for further details.

global_main.book.book Page 33 Sunday, October 16, 2022 2:28 PM

1 Slowly slide the detergent dispenser drawer out as far as it will go.

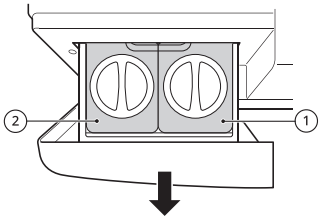

① Liquid detergent compartment (1)
② Liquid fabric softener or Liquid detergent compartment (2)

2 Turn the lids on the **ezDispense** compartments counterclockwise to open them.

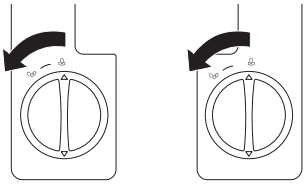

3 Pour the detergent and softener into their respective compartments, up to the **MAX** line.

- The **ezDispense** drawer has two compartments. Put the liquid detergent into the right hand side compartment and the liquid fabric softener or liquid detergent into the left hand side compartment. If detergent is added to the ② compartment, the fabric softener cannot be used.
- Do not put liquid or powdered bleach, or powdered, gel or sheet type detergents into the **ezDispense** compartments.
- Remove any residual detergent on the outside of the **ezDispense** drawer before inserting it.
- Do not try to fill the compartments too quickly. Add detergent and softener slowly to avoid overflows.

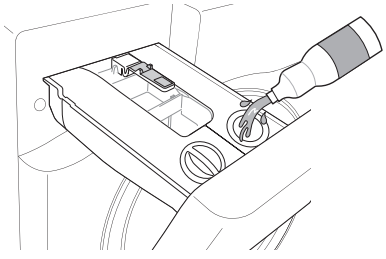

4 After filling the compartments, insert the lids and turn them clockwise until they are tightly closed.

- Securely close the lids to the **ezDispense** compartments to minimize airflow which can harden these additives and prevent them from dispensing properly. Be careful not to lose the lids.

5 Close the dispenser drawer slowly before starting the cycle.

- Slamming the drawer closed may result in the detergent overflowing into another compartment or dispensing into the drum earlier than programmed.
- Be careful not to get a hand caught in the drawer while closing.
- It is normal for a small amount of water to remain in the manual dispenser compartments at the end of the cycle.

⚠ CAUTION

- Close lid and cover of the compartment securely before use. If not, the detergent and softner will harden or overflow.

global_main.book.book Page 34 Sunday, October 16, 2022 2:28 PM

⚠ CAUTION

- Slide the detergent dispenser drawer out or in slowly and use both hands for safety. Failure to do so can damage the washer or cause the detergent or softener to leak out of the ventilation holes.
- Detergent or fabric softener left in the **ezDispense** compartments for an extended period may harden and fail to dispense properly.
- Do not remove the dispenser drawer while the product is in operation.
- Remove detergent/softener in the **ezDispense** compartments before moving or relocating the the washing machine.
- Keep the **ezDispense** compartment level to prevent contents from leaking.

Using the Manual Dispense Function

Add detergent to the manual dispenser.

1 Turn off the ezDispense system for each dispenser by pressing the 1 and 2 buttons respectively. The LED lights on the ezDispense controls go out when the ezDispense is turned off.

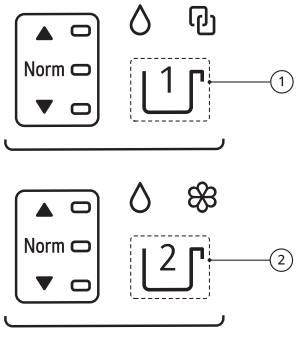

2 Open the ezDispense drawer.

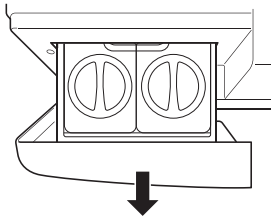

3 Load the laundry products into the appropriate manual dispenser compartments.

- Use the main wash detergent compartment at the manual dispenser for powdered or liquid detergent.
- Do not place detergent sheets, tablets or packs in the manual dispenser.
- If using single-use detergent packs, place the pack in the drum before loading the laundry. Do not place liquid or powdered detergent packs in the any of the dispensers.

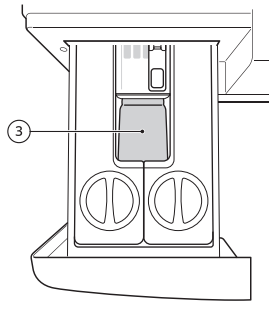

③ Manual main wash detergent compartment

4 Close the detergent dispenser drawer slowly before starting the cycle.

- Slamming the detergent dispenser drawer may result in the detergent

global_main.book.book Page 35 Sunday, October 16, 2022 2:28 PM

overflowing into another compartment or pouring into the tub earlier than programmed.

⚠ CAUTION

- Do not place or store laundry products, such as detergent, bleach, or liquid fabric softener, on top of your washer. These products can damage the washer's finish and controls.

NOTE

- The manual dispenser cannot be used for dispensing pre-wash detergent.
- When adding detergent tablets and water softener, be sure to turn off the **ezDispense** function.

Manual Main Wash Detergent Compartment

This compartment holds laundry detergent for the main wash cycle. It is recommended that powdered detergent be used in this compartment.

- Liquid or powdered color-safe bleach may be added to the manual main wash compartment with detergent of the same type. Do not mix liquids and powders.
- If you use a detergent that does not dissolve easily or a detergent with high viscosity, it will leave a residue and clog the dispenser.
- Be sure to turn off the **ezDispense** function.

Adding Detergent Tablets

Detergent tablets can also be used when washing.

1. Open the door and put detergent tablets into the drum before loading the clothes.
2. Load the clothes into the drum and close the door.

NOTE

- Do not put tablets into the dispenser.

Adding Water Softener

A water softener, such as anti-limescale can be used to cut down on the use of detergent in areas with high water hardness level.

- First add detergent, and then the water softener. Dispense according to the amount specified on the packaging.

global_main.book.book Page 36 Sunday, October 16, 2022 2:28 PM

Programme Table

Washing Programme

Cotton	**40 °C (Cold to 95 °C)**	**Max. Load: Rating**
Description	Washes normally soiled clothes by combining various drum motions.	

Eco 40-60	**40 °C (40 °C to 60 °C)**	**Max. Load: Rating**
Description	Washes normally soiled cotton clothes declared to be washable at 40 °C or 60 °C.	

TurboWash 39	**40 °C (Cold to 60 °C)**	**Max. Load: 5 kg**
Description	With 4 water jets operating during the wash and rinse, this washing machine can wash a half load of lightly soiled clothes for approximately 39 minutes.	

Mixed Fabric	**40 °C (Cold to 60 °C)**	**Max. Load: 4 kg**
Description	Washes mixed fabrics simultaneously. • Use for various kind of fabrics except special garments (silk/ delicate, sports wear, dark clothes, wool, duvet/curtains).	

Easy Care	**40 °C (Cold to 60 °C)**	**Max. Load: 4 kg**
Description	Washes clothes that do not need ironing after washing. • Use for Polyamide, acrylic, polyester.	

Silent Wash	**40 °C (Cold to 60 °C)**	**Max. Load: 5 kg**
Description	Washes clothes with less noise and vibration than other washing programmes. • Use for lightly soiled white cotton (underwear).	

Allergy Care	**60 °C**	**Max. Load: 4 kg**
Description	Helps minimise substances that cause an allergic reaction. • Use for cotton, underwear, pillow covers, bed sheets, baby wear.	

global_main.book.book Page 37 Sunday, October 16, 2022 2:28 PM

Delicates	**20 °C (Cold to 40 °C)**	**Max. Load: 3 kg**
Description	Washes machine-washable lingerie, sheer and lacy clothes.	

Hand/Wool	**30 °C (Cold to 40 °C)**	**Max. Load: 2 kg**
Description	Washes hand-washable and machine-washable delicate clothes such as washable wool, lingerie, dresses etc. • Use detergent for machine washable woolens	

Sportswear	**40 °C (Cold to 40 °C)**	**Max. Load: 3 kg**
Description	Washes special garments like sports and outdoor wear. • Use for water-repellent fabric laminate used on clothing.	

Speed 14	**20 °C (20 °C to 40 °C)**	**Max. Load: 2 kg**
Description	Washes small loads of lightly soiled clothes for approximately 14 minutes.	

Duvet	**Cold (Cold to 40 °C)**	**Max. Load: 2.5 kg (1 down duvet)**
Description	Washes large items such as bed covers, pillows, sofa covers, etc.	

Tub Clean	**-**	**-**
Description	This function helps clean the inside of your appliance's tub.	

Download Cycle	**-**	**-**
Description	This programme allows you to download a new and special washing programme to your appliance with a smartphone. The default programme is **Rinse+Spin**.	

NOTE

- Select the appropriate water temperature for chosen wash programme. Always follow garment manufacturer’s care label or instructions when washing to avoid damage to clothes.
- Select the proper wash temperature and spin speed for the desired programmes.
- Actual water temperature may differ from the declared cycle temperature.

global_main.book.book Page 38 Sunday, October 16, 2022 2:28 PM

NOTE

- Neutral detergent is recommended.

Extra Options

*1 This option is automatically inserted in the programme and can not be deselected.

NOTE

- **Rinse+**, **Delay End** and **Add Item** options can be selected for every washing programme in this table.

Programme	Steam	TurboWash	Pre Wash	Intensive
Cotton	●	●	●	●
Eco 40-60	●	●	●	●
TurboWash 39	●	●*1	●	
Mixed Fabric	●	●	●	●
Easy Care	●	●	●	●
Silent Wash	●	●		●
Allergy Care	●*1			●
Delicates		●		●
Hand/Wool				●
Sportswear		●		●
Speed 14		●*1		
Duvet		●		●

global_main.book.book Page 39 Sunday, October 16, 2022 2:28 PM

Selectable Maximum Spin Speed

Programme	Spin Speed	
	Default	Available
Cotton	1600 rpm	All
Eco 40-60	1600 rpm	All
TurboWash 39	1200 rpm	400 to 1600 rpm
Mixed Fabric	1000 rpm	All
Easy Care	1600 rpm	All
Silent Wash	800 rpm	Up to 1000 rpm
Allergy Care	1600 rpm	All
Delicates	800 rpm	Up to 800 rpm
Hand/Wool	800 rpm	Up to 800 rpm
Sportswear	800 rpm	Up to 800 rpm
Speed 14	400 rpm	All
Duvet	1000 rpm	Up to 1000 rpm

NOTE

- Actual maximum spin speed may vary depending on the load conditions.

global_main.book.book Page 40 Sunday, October 16, 2022 2:28 PM

Consumption Data

Unit Description

kg: Laundry load

kWh: Energy consumption

Litres: Water consumption

h:mm: Programme duration

°C: Maximum temperature inside the treated textile

rpm: Maximum spin speed

%: Remaining moisture at the end of spinning phase. The higher is the spin speed, the higher is the noise and the lower is the remaining moisture.

Common Programmes

Model:F6V910WTSA F6V910BTSA

Programme	kg	h:mm	kWh	°C	Litres	rpm	%
Cotton 20 °C	10.5	2:38	0.330	25	78.0	1570	49.0
Cotton 60 °C	10.5	2:58	1.590	49	78.0	1570	49.0
Mixed Fabric	4	1:21	0.603	35	54.0	1000	67.0
Speed 14	2	0:14	0.051	21	54.0	400	106.0
Cotton 40 °C + **Intensive**	10.5	3:31	0.910	34	107.0	1570	49.0
Eco 40-60 (Full)*1	10.5	4:00	0.853	35	70.0	1560	45.1
Eco 40-60 (Half)*1	5.25	3:00	0.549	30	53.0	1560	42.8
Eco 40-60 (Quarter)*1	2.5	2:25	0.314	25	43.0	1560	45.9

Model:F6V909WTSA F6V909BTSA

Programme	kg	h:mm	kWh	°C	Litres	rpm	%
Cotton 20 °C	9	2:38	0.330	24	74.0	1570	49.0
Cotton 60 °C	9	2:58	1.575	51	74.0	1570	49.0
Mixed Fabric	4	1:21	0.603	35	54.0	1000	67.0

global_main.book.book Page 41 Sunday, October 16, 2022 2:28 PM

Programme	kg	h:mm	kWh	°C	Litres	rpm	%
Speed 14	2	0:14	0.051	21	54.0	400	106.0
Cotton 40 °C + **Intensive**	9	3:31	0.850	35	100.0	1570	49.0
Eco 40-60 (Full)*1	9	3:48	0.788	33	61.0	1560	43.0
Eco 40-60 (Half)*1	4.5	2:45	0.440	29	46.0	1560	43.0
Eco 40-60 (Quarter)*1	2.5	2:25	0.280	26	42.0	1560	44.5

*1 It is able to clean normally soiled cotton laundry declared to be washable at 40 °C or 60 °C, together in the same cycle, and that this programme is used to assess the compliance with the EU ecodesign legislation (EU 2019/2023).

NOTE

- The test results depend on water pressure, water hardness, water inlet temperature, room temperature, type and amount of load, degree of soiling utilized detergent, fluctuations in the main electricity supply and chosen additional options.
- The values for the common programs, with the exception of the **Eco 40-60** cycle, are indicative only.
- Regulation EU 2019/2023, valid from 1st March 2021, is related to the Energy Efficiency classes by Regulation EU 2019/2014.
- Scan the QR code on the energy label supplied with the appliance, which provides a web link to the information related to the performance of the appliance in the EU EPREL database. Keep the energy label for reference together with the owner's manual and all other documents supplied with the appliance.
- The model name can be found on the rating label of the appliance, open the door which is just around the opening to the drum.
- To find the same information in EPREL, visit **https://eprel.ec.europa.eu** and search using the model name. (Valid from 1st March 2021)

global_main.book.book Page 42 Sunday, October 16, 2022 2:28 PM

Extra Options and Functions

You can use the extra options and functions to customize the programmes.

Customizing a Washing Programme

Each programme has default settings that are selected automatically. You may also customize these settings using these buttons.

Temp.

This button selects the wash temperature for the selected programme.

- Press the **Temp.** button until the desired setting is lit.
- Select the water temperature suitable for the type of load you are washing. Follow the garment fabric care labels for best results.

Spin

The spin intensity level can be selected by pressing this button repeatedly.

- Press the **Spin** button to select spin speed.

NOTE

- If **No** of the spin level is selected, the drum of the washing machine will rotate before the drainage.

Rinse+

This function is recommended for people with detergent allergies.

- Press and hold the **TurboWash** button for 3 seconds to add rinse once.

Intensive

This function is used to wash normal and heavily soiled clothes.

- Press and hold the **Pre Wash** button for 3 seconds.

Follow the next steps to customize a washing programme:

1. Prepare the clothes and load the drum.
2. Press the **Power** button.
3. Add detergent.
4. Select a washing programme.
5. Customize the washing programme (**Temp.**, **Spin**, **Rinse+** and **Intensive**) as necessary.
6. Press the **Start/Pause** button.

Only Using a Spin Function

1. Prepare the clothes and load the drum.
2. Press the **Power** button.
   - Do not select a washing programme and do not add a detergent.
3. Press the **Spin** button.
4. Press the **Start/Pause** button.

global_main.book.book Page 43 Sunday, October 16, 2022 2:28 PM

NOTE

- If you select the washing programme, you will be unable to select a spin only. If this occurs, press the **Power** button twice to cycle the machine off and back on.

Using Special Options

You can customize the programmes by using the following special options:

Steam

Adding this option helps provide better cleaning results.

TurboWash

Adding this option reduces the programme time but the similar washing results will be provided.

Follow the next steps to use a special option.

1 Press the **Power** button.

2 Select a washing programme.

3 Change the washing programme (**Rinse+**, **Temp.**, **Spin** and **Intensive**) as necessary.

4 To use special options, press **Steam** or **TurboWash** button.

5 Press the **Start/Pause** button.

Using Basic Options

You can customize the programmes by using the following basic options:

Pre Wash

This option is recommended when washing a heavily soiled load.

1 Press the **Power** button.

2 Select a washing programme.

3 Press the **Pre Wash** button as necessary.

4 Press the **Start/Pause** button.

Add Item

You can use this option in order to add or remove clothes after the washing programme has started.

1 Press the **Power** button.

2 Select a washing programme.

3 Press the **Start/Pause** button.

4 Press the **Add Item** button as necessary.

5 Open the door after it unlocks itself and add or remove necessary clothing items.

6 Close the door and press the **Start/Pause** button.

NOTE

- For safety reasons, the door remains locked when the water level or temperature inside of the drum is high. It is not possible to add clothes at this time.

global_main.book.book Page 44 Sunday, October 16, 2022 2:28 PM

Delay End

You can set this function so that the appliance starts automatically and finishes after a specified time interval.

1 Press the **Power** button.

2 Select a washing programme.

3 Press the **Delay End** button as necessary.

4 Press the **Start/Pause** button.

NOTE

- Except for LED of the **Delay End** button, all LEDs on the control panel will be turned off within 20 minutes. This feature may vary depending on the model purchased.
- The delay time is the time to the end of the programme, not the start. The actual running time may vary due to water temperature, clothes and other factors.
- To cancel the function, the **Power** button should be pressed.
- Avoid using liquid detergent for this function.

Using the ezDispense

Use the **Dispenser 1** and **Dispenser 2** buttons to set up and control the **ezDispense** function.

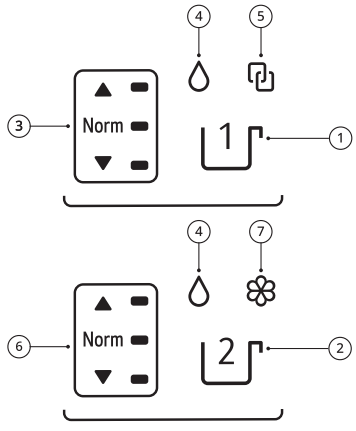

① **Dispenser 1** button
② **Dispenser 2** button
③ Buttons indicator
④ Liquid detergent indicator
⑤ Link indicator (Using only liquid detergent both compartments)
⑥ Buttons indicator
⑦ Liquid fabric softener indicator

NOTE

- Whether the detergent or softener indicator may blink and the chime may sound, even if there is sufficient detergent or softener left to use for approximately 2 to 4 washing programmes;
  - If the liquid detergent indicator ④ and buttons indicator ③ , ⑥ blink and the chime sounds, pour the detergent into the compartment, up to the **MAX** line.
  - If the liquid fabric softener indicator ⑦ and buttons indicator ⑥ blink and the chime sounds, pour the fabric

global_main.book.book Page 45 Sunday, October 16, 2022 2:28 PM

softener into the compartment, up to the **MAX** line.

- The default settings are configured to dispense the detergent of **Dispenser 1** and the fabric softener of **Dispenser 2**.

Changing Dispense Level for a Single Load

1 Press the **Power** button.

2 Turn the knob to select the desired cycle.

3 Press the **Dispenser 1** or **Dispenser 2** button to increase or decrease the dispensed amount from the set defaults.

Buttons Indicator	Dispensed Amount*1
	More (110%)
	Normal (100%)
	Less (90%)
	Off (0%)

*1 The default settings are configured to dispense **42 ml** of detergent and **30 ml** of softener for **4-6 kg** of normally soiled laundry.

4 Press the **Start/Pause** button.

NOTE

- Use the manufacturer's recommendations on the detergent or fabric softener package when setting the **ezDispense** amounts for a standard **4-6 kg** load.
- Most cycles will automatically use the default amounts you have set, indicated by the Normal LED light on the **Dispenser 1** and **Dispenser 2** buttons.
- The **Delicates**, **Hand/Wool**, **Sportswear**, and **Tub Clean** cycles turn the **ezDispense** function off by default.

Changing Default Dispense Amounts

The default settings are configured to dispense **42 ml** of detergent and **30 ml** of softener for **4-6 kg** of normally soiled laundry.

Detergent should be used according to the instruction of the detergent manufacturer and selected according to type, colour, soiling of the fabric and the washing temperature.

1 Press the **Power** button.

2 Change default dispense amounts.

- **Dispenser 1** : Press and hold the **Dispenser 1** button for 3 seconds.
- **Dispenser 2** : Press and hold the **Dispenser 2** button for 3 seconds.

3 Turn the knob to increase or decrease the amount of detergent or fabric softener. The amount is shown in the display.

- The default amounts can be increased or decreased in **1 ml**

global_main.book.book Page 46 Sunday, October 16, 2022 2:28 PM

increments, within a range of **9 ml** to **150 ml**. The amount dispensed may vary slightly depending on the model.

4 Save the default changes.

- **Dispenser 1** : Press and hold the **Dispenser 1** button for 3 seconds.
- **Dispenser 2** : Press and hold the **Dispenser 2** button for 3 seconds.

Using both Dispensers for Liquid Detergent

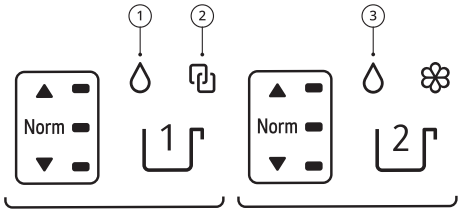

NOTE

- If you set both dispensers for liquid detergent, you can not use the liquid softener dispenser for liquid softener.
- If you want to use a liquid softener:
  - After the programme is finished, select **Rinse+Spin** (Default programme of Download Cycle) and add softener directly into the drum or into the manual main wash detergent compartment.
  - If you downloaded a download cycle, **Rinse+Spin** is not available.

Setting the Dispenser 2 for Same Liquid Detergent Dispenser

1 Press the **Power** button.

2 Press and hold the **Dispenser 1** and **Dispenser 2** buttons at the same time for 3 seconds.

3 Press the **Dispenser 1** button to light up the ② Link indicator.

- The ① Liquid detergent indicator is always light on.
- When the ② Link indicator is selected, the **Dispenser 2** button cannot be operated.

4 Press and hold the **Dispenser 1** and **Dispenser 2** buttons at the same time for 3 seconds to save the changes.

Setting the Dispenser 2 for Different Liquid Detergent Dispenser

1 Press the **Power** button.

2 Press and hold the **Dispenser 1** and **Dispenser 2** buttons at the same time for 3 seconds.

3 Press the **Dispenser 2** button to light up the ③ Liquid detergent indicator.

4 Press and hold the **Dispenser 1** and **Dispenser 2** buttons at the same time for 3 seconds to save the changes.

Cleaning the ezDispense pumping system

Use this function to change the type of detergent or softener. This function cleans residual detergent or softener in the hose connected to the **ezDispense**

global_main.book.book Page 47 Sunday, October 16, 2022 2:28 PM

① (when changing the type of detergent or softener).

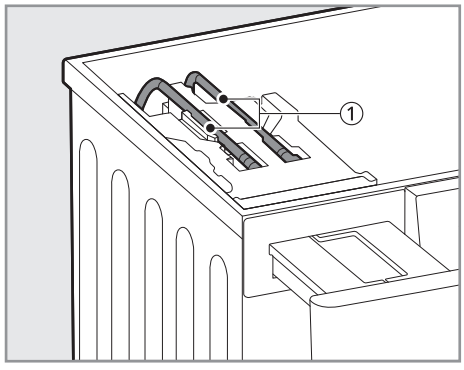

NOTE

- Run this function once a month (or more often if needed) to remove detergent buildup and other residue.
- If you do not clean the **ezDispense** compartment, detergent or softener will be remained in the connected hose.
- Using this function may cause some foam in the drum.

1 Wash the **ezDispense** compartment that needs to be cleaned. Please refer to **Cleaning the Appliance Periodically** in **MAINTENANCE** chapter for further details.

2 Fill the water in compartment to be cleaned up to the **MAX** line.

3 Press the **Power** button.

4 Press and hold the **Spin** button for 3 seconds to clean the connected hose. When this option is selected, dcL appears on the display.

5 Press the **Dispenser 1** or **Dispenser 2** button to select the compartment to be cleaned up.
   - Both compartments can be cleaned at the same time.

6 Press the **Start/Pause** button. Finishes this function within 16 minutes.

Settings

Child Lock

Use this option to disable the controls. This function can prevent children from changing cycles or operating the appliance.

NOTE

- Once this function is set, all buttons are locked except the **Power** button.
- When the controls are locked, CL and the remaining time are alternatively shown on the display during the wash while this function is engaged.
- Turning off the power will not reset this function. You must deactivate this function before you can access any other functions.

Locking the Control Panel

1 Turn on the power.

2 Press and hold the **Delay End** and **Add Item** buttons at the same time for 3 seconds to activate this function.
   - A beeper will sound, and CL will appear on the display.

global_main.book.book Page 48 Sunday, October 16, 2022 2:28 PM

Unlocking the Control Panel

1 Turn on the power.

2 Press and hold the **Delay End** and **Add Item** buttons at the same time for 3 seconds to deactivate this function.

Beep On/Off

This appliance plays a melody when it starts and stops.

- Press and hold the **TurboWash** and **Pre Wash** buttons simultaneously for 3 seconds to deactivate/activate this function.

global_main.book.book Page 49 Sunday, October 16, 2022 2:28 PM

SMART FUNCTIONS

LG ThinQ Application

The **LG ThinQ** application allows you to communicate with the appliance using a smartphone.

LG ThinQ Application Features

Communicate with the appliance from a smartphone using the convenient smart features.

Remote Start

It allows you to control the appliance remotely from the **LG ThinQ** application.

Download Cycle

You can download new and special cycles that are not included in the basic cycles on the appliance.

A variety of specialty cycles specific to the appliance can be downloaded to the successfully registered appliances.

Once cycle download is completed in the appliance, the appliance keeps the downloaded cycle until a new cycle is downloaded.

NOTE

- Only one downloaded cycle can be stored on the appliance at a time.

Tub Clean Coach

This function shows how many cycles remain before it is time to run the **Tub Clean** function.

Energy Monitoring

This function checks the energy consumption of the recently used cycles and monthly average.

Smart Diagnosis

This function provides useful information for diagnosing and solving issues with the appliance based on the pattern of use.

Settings

Allows you to set various options on the appliance and in the application.

Push Alert

When the cycle is complete or the appliance has problems, you have the option of receiving push notifications on a smartphone. The notifications are triggered even if the **LG ThinQ** application is off.

NOTE

- If you change your wireless router, Internet service provider, or password, delete the registered appliance from the **LG ThinQ** application and register it again.
- The application is subject to change for appliance improvement purposes without notice to users.
- Functions may vary by model.

global_main.book.book Page 50 Sunday, October 16, 2022 2:28 PM

Installing LG ThinQ App and Connecting an LG Appliance

Models with QR Code

Scan the QR code attached to the product using the camera or a QR code reader app on your smartphone.

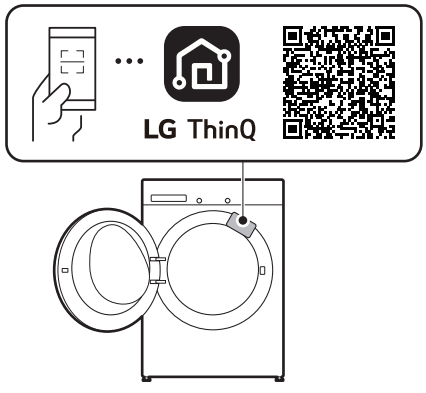

Models without QR Code

1 Search for and install the **LG ThinQ** app from the Google Play Store or Apple App Store on a smartphone.

2 Run the **LG ThinQ** app and sign in with your existing account or create an LG account to sign in.

3 Touch the add (+) button on the **LG ThinQ** app to connect your LG appliance. Follow the instructions in the app to complete the process.

NOTE

- To verify the Wi-Fi connection, check that the Wi-Fi indicator on the control panel is lit.
- **LG ThinQ** is not responsible for any network connection problems or any faults, malfunctions, or errors caused by network connection.
- The surrounding wireless environment can make the wireless network service run slowly.
- If the distance between the appliance and the wireless router is too far, the signal becomes weak. It may take a long time to connect or fail to install the app.
- If the appliance is having trouble connecting to the Wi-Fi network, it may be too far from the router. Purchase a Wi-Fi repeater (range extender) to improve the Wi-Fi signal strength.
- The network connection may not work properly depending on the Internet service provider.
- The Wi-Fi may not connect or the connection may be interrupted because of the home network environment.
- If the appliance cannot be connected due to problems with the wireless signal transmission, unplug the appliance and wait about a minute before trying again.
- If the firewall on your wireless router is enabled, disable the firewall or add an exception to it.
- The wireless network name (SSID) should be a combination of English letters and numbers. (Do not use special characters.)
- Smartphone user interface (UI) may vary depending on the mobile operating system (OS) and the manufacturer.
- If the security protocol of the router is set to **WEP**, network setup may fail. Change the security protocol (**WPA2** is recommended), and connect the product again.

global_main.book.book Page 51 Sunday, October 16, 2022 2:28 PM

Activating Network Connection

1 Run the **LG ThinQ** application.

2 Select and touch the **Front Load Washer** in the application.

3 Press the **Power** button on the control panel.

4 Press and hold **Wi-Fi** button for 3 seconds on the control panel.
- The Wi-Fi LED blinks during the connection process.

Using the Appliance Remotely

Remote Start

Use a smartphone to control your appliance remotely. You can also monitor your cycle operation so you know how much time is left in the cycle.

Using this function

1 Put the clothes into the drum.
- If desired, add bleach or fabric softener to the appropriate areas of the dispenser.

2 Press the **Power** button.

3 Press and hold **Remote Start** button for 3 seconds to enable the remote control function.

4 Start a cycle from the **LG ThinQ** application on your smartphone.

NOTE

- Once this function is enabled, you can only start a cycle from the **LG ThinQ** smartphone application. If the cycle is not started, the appliance will wait to start the cycle until it is turned off remotely from the application or this function is disabled.
- If the door has been opened, you can not start a cycle remotely.

Disable this function manually

When this function is activated, press and hold the **Remote Start** button for 3 seconds.

Deactivating Network Connection

1 Press the **Power** button on the control panel.

2 Press and hold the **Spin** and **Delay End** buttons simultaneously for 3 seconds to deactivate Network Connection.

Standby Power Consumption

Standby power consumption	**0.5 W**
Network standby power consumption	**2.0 W**

global_main.book.book Page 52 Sunday, October 16, 2022 2:28 PM

The period of time after which the power management function, or a similar function, switches the equipment automatically into standby and/or off mode and/or the condition providing networked standby	**20 minutes**

NOTE

- The activation of the network connection may increase the power consumption of the appliance.

Open Source Software Notice Information

To obtain the source code that is contained in this product, under GPL, LGPL, MPL, and other open source licenses that have the obligation to disclose source code, and to access all referred license terms, copyright notices and other relevant documents, please visit https://opensource.lge.com.

LG Electronics will also provide open source code to you on CD-ROM for a charge covering the cost of performing such distribution (such as the cost of media, shipping, and handling) upon email request to opensource@lge.com.

This offer is valid to anyone in receipt of this information for a period of three years after our last shipment of this product.

global_main.book.book Page 53 Sunday, October 16, 2022 2:28 PM

Smart Diagnosis

Use this feature to help you diagnose and solve problems with your appliance.

NOTE

- For reasons not attributable to LGE's negligence, the service may not operate due to external factors such as, but not limited to, Wi-Fi unavailability, Wi-Fi disconnection, local app store policy, or app unavailability.
- The feature may be subject to change without prior notice and may have a different form depending on where you are located.

Using LG ThinQ to Diagnose Issues

If you experience a problem with your Wi-Fi equipped appliance, it can transmit troubleshooting data to a smartphone using the **LG ThinQ** application.

- Launch the **LG ThinQ** application and select the **Smart Diagnosis** feature in the menu. Follow the instructions provided in the **LG ThinQ** application.

Using Audible Diagnosis to Diagnose Issues

Follow the instructions below to use the audible diagnosis method.

- Launch the **LG ThinQ** application and select the **Smart Diagnosis** feature in the menu. Follow the instructions for audible diagnosis provided in the **LG ThinQ** application.

1 Press the **Power** button to turn on the appliance.
   - Do not press any other buttons.

2 Place the mouthpiece of your smartphone close to the **Power** button.

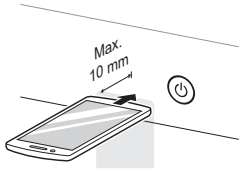

3 Press and hold the **Temp.** button for 3 seconds or longer while holding the smartphone mouthpiece to the **Power** button until the data transfer is complete.
   - Keep the smartphone in place until the data transfer has finished. Time remaining for data transfer is displayed.

4 After the data transfer is complete, the diagnosis will be displayed in the application.

NOTE

- For best results, do not move the smartphone while the tones are being transmitted.

global_main.book.book Page 54 Sunday, October 16, 2022 2:28 PM

MAINTENANCE

⚠ WARNING

- Unplug the appliance before cleaning to avoid the risk of electric shock. Failure to follow this warning may result in serious injury, fire, electric shock, or death.
- Never use harsh chemicals, abrasive cleaners, or solvents to clean the appliance. They may damage the finish.

Cleaning After Every Wash

What to Clean

Always remove items from the washing machine as soon as the cycle is complete. Leaving damp items in the washing machine can cause wrinkling, colour transfer, and odour.

- After the wash cycle is finished, wipe the door and door seal to remove any moisture.
- Leave the door slightly open to dry the drum.
- Wipe the appliance with a dry cloth to remove any moisture.

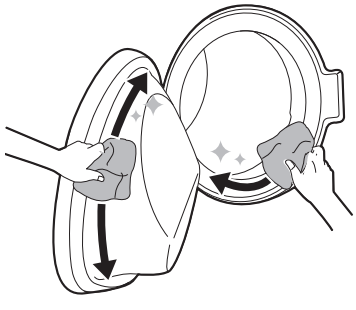

⚠ WARNING

- Leave the door open to dry inside of the appliance only if the children are supervised at home.

Cleaning the Exterior

Proper care of your appliance can extend the service life.

Exterior

- Immediately wipe off any spills.
- Wipe with a damp cloth and then again with a dry cloth ensuring there is no moisture in cabinet joints or crevices.
- Do not press on the surface or the display with sharp objects.

Door

- Wash with a damp cloth on the outside and inside and then dry with a soft cloth.

⚠ WARNING

- Do not attempt to separate any panels or disassemble the appliance. Do not apply any sharp objects to the control panel in order to operate the appliance.

global_main.book.book Page 55 Sunday, October 16, 2022 2:28 PM

Cleaning the Appliance Periodically

Tub Clean

This is a programme to help clean the inside of the appliance by soaking, washing, rinsing and spinning.

Run this function **once a month** (or more often if needed) to reduce build-up of detergent and softener and other residue.

- If there is a bad smell or mildew inside the appliance, run this function **once a week for 3 weeks** in addition to the regularly prompted intervals.

NOTE

- The tcL message will be displayed to alert to the recommendation of operating this function.

1. Remove any clothing or items from the appliance and close the door.
2. Open the dispenser drawer and add anti limescale powder to the main wash compartment.
   - Tablets can be placed directly into the drum as an alternative to powder.
3. Close the dispenser drawer slowly.
4. Turn on the power, and then select the **Tub Clean**.
5. Press the **Start/Pause** button to start.
6. Leave the door open to dry the inside of the appliance completely.
   - When the inside of the appliance is not dried completely, it may cause a bad smell or mildew.

⚠ WARNING

- Leave the door open to dry inside of the appliance only if the children are supervised at home.

Cleaning the Water Inlet Filter

The water inlet filter collects lime or any sediment that may be in water that is supplied to the appliance. Clean the inlet filter every six months or so, or more often if the water is very hard or contains traces of limescale.

- Turn off the water supply taps to the appliance if the appliance is to be left for a certain period of time (e.g. holiday), especially if there is no floor drain (gully) in the immediate vicinity.
- IE error message will be displayed on the control panel when the water is not entering the detergent drawer.

1. Turn off the power and the water tap and then unscrew the water inlet hose.

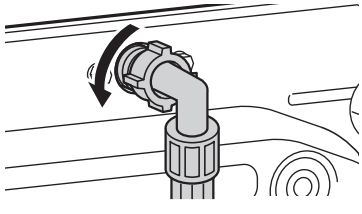

global_main.book.book Page 56 Sunday, October 16, 2022 2:28 PM

2 Remove the water inlet filter with small pliers and then clean the filter using a medium bristle tooth brush.

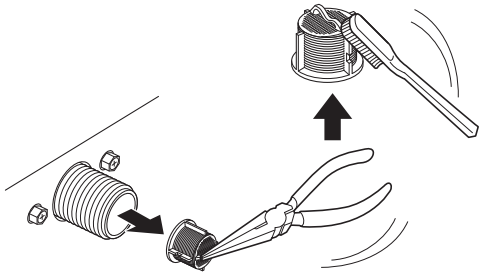

Cleaning the Drain Pump Filter and Performing an Emergency Water Evacuation

The drain filter collects threads and small objects that may have been accidentally left in the clothes. Make sure that the filter is clean every six months to ensure smooth running of your appliance.

Allow the water to cool before cleaning the drain pump filter. Open the door in an emergency or perform an emergency water evacuation.

1 Unplug the appliance.

2 Open the cover cap and pull out the drain tube.

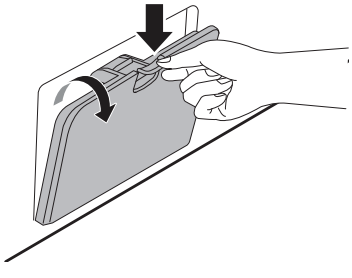

3 Remove the drain plug from the drain tube first ①, and then drain the water. Then slowly unscrew the drain pump filter ② to drain the remaining water and then proceed to remove any debris or objects from the filter.

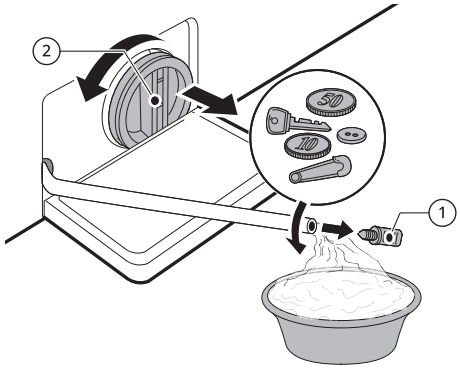

4 After cleaning the drain pump filter, carefully reinsert the filter and screw the drain cap back in clockwise carefully to avoid cross threading and leakage. Reinsert the plug back into the drain tube and place the tube into its holder.

5 Close the cover cap.

⚠ CAUTION

- Be careful when draining, as the water may be hot.
- Run the drum cleaning programme once a month (or more often, as needed) to remove excess detergent and other debris.

Cleaning the ezDispense Drawer

Clean the **ezDispense** compartments **every time** you refill the detergent/softener or change to a new type of detergent/softener.

global_main.book.book Page 57 Sunday, October 16, 2022 2:28 PM

Remove and clean the detergent dispenser drawer **once or twice a month**. Leaving detergent in the detergent dispenser drawer for an extended period or using the washing machine for a long time may cause the build-up of residue in the detergent dispenser drawer.

⚠ WARNING

- Do not spray water inside the washing machine. Doing so may cause fire or electric shock.

1 Turn off the washing machine, and unplug the power cord.

2 Pull out the detergent dispenser drawer until it stops.

3 Press down the disengage button ① to completely remove the drawer.

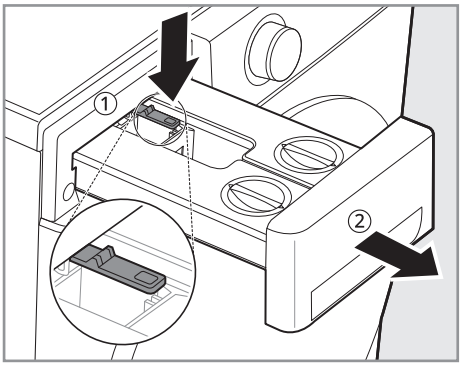

4 Open the lids.

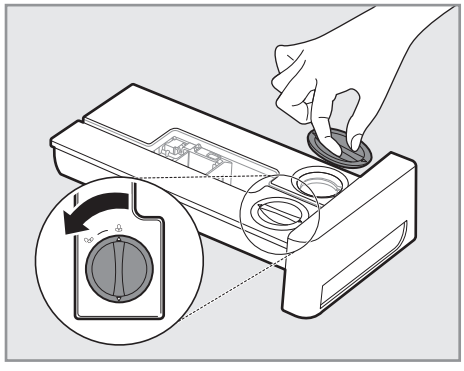

5 Clean the inserts with warm water.

- Rinse the drawer in warm water to dissolve the detergent residue or softener scale.
- Use a soft cloth or brush to remove any residue.
- Do not use soap when cleaning the drawer and inserts.

6 If the detergent or softener is hardened inside the **ezDispense** compartments, remove the covers on the drawer.

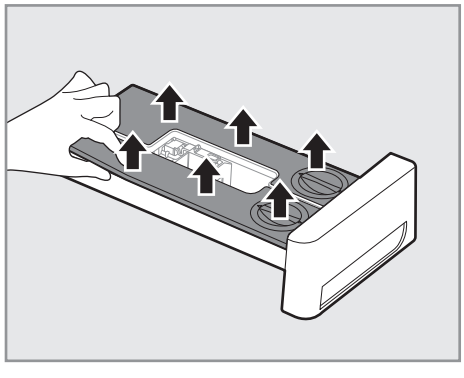

7 Clean the insides of the compartments with warm water.

global_main.book.book Page 58 Sunday, October 16, 2022 2:28 PM

- Use a soft cloth or brush to clean and to remove any residue.
- Do not use soap when cleaning the drawer and inserts.

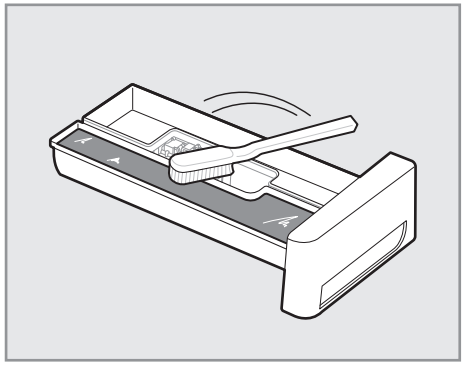

8 Securely close the covers on the **ezDispense** compartments.

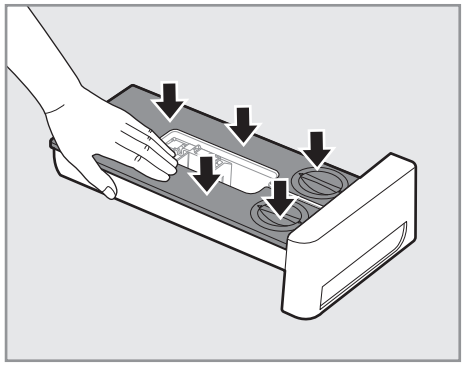

9 Wipe off any moisture with a dry towel or cloth after cleaning.

10 Reinsert the detergent dispenser drawer.

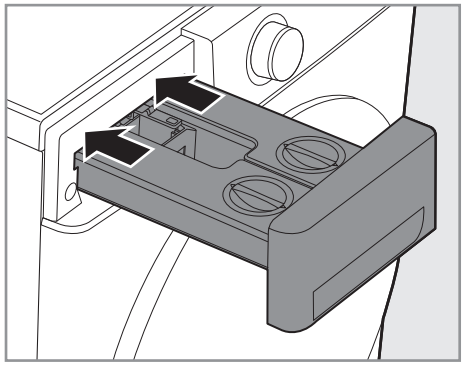

global_main.book.book Page 59 Sunday, October 16, 2022 2:28 PM

TROUBLESHOOTING

Operation of your appliance can lead to errors and malfunctions. The following tables contain possible causes and notes for resolving an error message or malfunction. It is recommended to read the tables carefully below in order to save your time and money that may cost for calling to LG Electronics service centre.

Before Calling for Service

Your appliance is equipped with an automatic error-monitoring system to detect and diagnose problems at an early stage. If the appliance does not function properly or does not function at all, check the following tables before calling to LG Electronics service centre.

Error Messages

Symptoms	Possible Cause & Solution
IE **INLET ERROR**	**Water supply is not adequate in that location. Water does not enter appliance or it enters slowly.** • Check another tap in the house.
	Water supply tap is not completely open. Water does not enter the appliance or it enters slowly. • Open fully tap.
	Water supply hose(s) are kinked. • Straighten hose or reinstall the water inlet hose.
	The filter of the supply hose(s) are clogged. • Check and clean the inlet valve filter after turning off the taps and removing the hose connections to the washing machine.
UE **UNBALANCE ERROR**	**The appliance has a system which detects and corrects the unbalance of the appliance.** • The clothes may be too wet at the end of the cycle, rearrange the load to allow proper spinning. Close the door and press **Start/Pause** button. It may take a few moments before the appliance begins to spin. The door must be locked before spin can be achieved.

global_main.book.book Page 60 Sunday, October 16, 2022 2:28 PM

Symptoms	Possible Cause & Solution
UE **UNBALANCE ERROR**	**Load is too small. This system may stop spinning or even interrupt the spin cycle altogether if individual heavy articles (e.g. bath mat, bath robe, etc.) are loaded.** • Add 1 or 2 similar items or smaller articles of clothes to help balance the load. Close the door and press **Start/Pause** button. It may take a few moments before the appliance begins to spin. The door must be locked before spin can be achieved.
OE **WATER OUTLET ERROR**	**Drain hose is kinked or clogged. Water in the appliance does not drain or drains slowly.** • Clean and straighten the drain hose.
	The drain filter is clogged. • Check and clean the drain filter.
dE dE1 dE2 dE4 **DOOR ERROR**	**Door sensor malfunctions.** • Please call LG service centre. You can find your local LG service centre phone number in the warranty card.
tE **CONTROL ERROR**	**This is a control error.** • Unplug the power plug and call for service.
LE **MOTOR LOCKED ERROR**	**Over load in motor.** • Let the appliance wait for 30 minutes until the motor is cooled down and then, restart the cycle.
FE **OVERFLOW ERROR**	**Water overfills due to a possible faulty water valve.** • Close the water tap. Unplug the power plug. Call for service.
PE **PRESSURE SENSOR ERROR**	**Water level sensor malfunctions.** • Close the water tap. Unplug the power plug. Call for service.
uS **VIBRATION SENSOR ERROR**	**Vibration sensor malfunctions.** • Call for service.
FF **FROZEN FAILURE**	**Is supply/drain hose or drain pump frozen?** • Supply warm water into the drum in order to unfreeze the drain hose and the drain pump. Cover the supply hose with wet and warm towel.
AE **WATER LEAKAGE**	**Water leaks.** • Call for service.

global_main.book.book Page 61 Sunday, October 16, 2022 2:28 PM

Symptoms	Possible Cause & Solution
PF **POWER FAILURE**	**Power failure or inadequate electrical service may have occurred during operation.** • Press the **Start/Pause** button to restart the cycle.

ezDispense Error Messages

Symptoms	Possible Cause & Solution
E d 1 **ezDispense ERROR 1**	**The amount of liquid detergent in the detergent compartment did not decrease.** **After putting the detergent into the detergent compartment, it was left for a long time and the detergent hardened.** • Clean the detergent compartment thoroughly, fill it with liquid detergent, install it in the drawer, and run a wash cycle. If E d 1 is displayed continuously, call for service.
E d2 **ezDispense ERROR 2**	**The amount of liquid detergent in the detergent compartment did not decrease.** • Call for service.
E d3 **ezDispense ERROR 3**	**The amount of fabric softener in the liquid fabric softener or liquid detergent compartment did not decrease.** **After putting the fabric softener into the liquid fabric softener or liquid detergent compartment, it was left for a long time and the fabric softener hardened.** • Clean the liquid fabric softener or liquid detergent compartment thoroughly, fill it with liquid fabric softener, install it in the drawer, and run a wash cycle. If E d3 is displayed continuously, call for service.
E d4 **ezDispense ERROR 4**	**The amount of liquid fabric softener in the liquid fabric softener or liquid detergent compartment did not decrease.** • Call for service.
E d5 **ezDispense ERROR 5**	**The amount of liquid detergent or fabric softener in the liquid fabric softener or liquid detergent compartment did not decrease.** • Call for service.

global_main.book.book Page 62 Sunday, October 16, 2022 2:28 PM

Symptoms	Possible Cause & Solution
0 Pn **ezDispense OPEN ERROR**	**The washer was operated without completely closing the drawer.** **The drawer was opened during the washer operation.** • Push the drawer completely closed. If 0 Pn is displayed continuously, call for service.

Noises You Might Hear

Symptoms	Possible Cause & Solution
Rattling and clanking noise	**Foreign objects, such as keys, coins, or safety pins may be in the drum.** • Stop the appliance, check the drum for foreign objects. If the noise continues after the appliance is restarted, call for service.
Thumping sound	**Heavy clothes may produce a thumping sound. This is usually normal.** • If the sound continues, the appliance is probably out of balance. Stop and redistribute the clothes.
	The clothes may be out of balance. • Pause the programme and redistribute the clothes after the door unlocks.
Vibrating noise	**Package materials are not removed.** • Remove package materials.
	The clothes may be unevenly distributed in the drum. • Pause the programme and redistribute the clothes after the door unlocks.
	Not all levelling feet are resting firmly and evenly on the floor. • See the **Levelling the Appliance** instruction to adjust the levelling of the appliance.
	Floor not rigid enough. • Check if the floor is sold and does not flex. See the **Installation Place Requirements** to select the proper location.

global_main.book.book Page 63 Sunday, October 16, 2022 2:28 PM

Operation

Symptoms	Possible Cause & Solution
Water is leaking.	**House drain pipes are clogged.** • Unclog waste pipes. Contact plumber if necessary.
	Leakage is caused by improper installation of drain hose or clogged drain hose. • Clean and straighten the drain hose. Check and clean the drain filter regularly.
	Drain pump filter cap is not fitted correctly. • Refit the drain pump filter.
Appliance does not operate.	**Control panel has powered off due to inactivity.** • This is normal. Press the **Power** button to turn the appliance on.
	Appliance is unplugged. • Make sure that the cord is plugged securely into a working outlet.
	Water supply is turned off. • Turn the water supply tap completely.
	Controls are not set properly. • Make sure that the programme is correctly set. Close the door and press the **Start/Pause** button.
	Door is open. • Close the door and make sure that nothing is caught under the door preventing it from closing completely.
	Circuit breaker/fuse is tripped/blown. • Check house circuit breakers/fuses. Replace fuses or reset breaker. The appliance should be on a dedicated branch circuit. The appliance will resume the programme where it stopped once power is restored.
	Control needs to be reset. • Press the **Power** button, then reselect the desired programme and press the **Start/Pause** button.

global_main.book.book Page 64 Sunday, October 16, 2022 2:28 PM

Symptoms	Possible Cause & Solution
Appliance does not operate.	**Start/Pause was not pressed after a programme was set.** • Press the **Power** button, then reselect the desired programme and press the **Start/Pause** button. The appliance is turned off if the **Start/Pause** button is not pressed within a certain time.
	Extremely low water pressure. • Check another tap in the house to make sure that household water pressure is adequate.
	Appliance is heating the water or making steam. • The drum may stop operating temporarily during certain cycles, while water is safely heated to a set temperature.
Appliance stops for a few minutes and then restarts.	**A motor protection device has been activated to prevent overheating of the motor.** • This is normal. If the motor protection device is activated, the appliance will stop for a few minutes and then start again.
Buttons may not function properly.	**The Child Lock option is activated.** • Deactivate the **Child Lock** option if necessary.
Door does not open.	**The door cannot be opened for safety reasons once the appliance starts.** • This is normal. You can safely open the door after turns off.
Appliance is not filling properly.	**Inlet filter clogged.** • Make sure the inlet filters on the fill valves are not clogged.
	Inlet hoses may be kinked. • Check that inlet hoses are not kinked or clogged.
	Insufficient water supply. • Make sure that both hot and cold water taps are turned on all the way.
	Hot and cold supply hoses are reversed. • Check supply hose connections.
Appliance does not drain water.	**Kinked drain hose.** • Ensure that the drain hose is not kinked.

global_main.book.book Page 65 Sunday, October 16, 2022 2:28 PM

Symptoms	Possible Cause & Solution
Appliance does not drain water.	**Drain located higher than 1 m above the floor.** • Make sure that the drain hose is no higher than 1 m above the bottom of the appliance.
Detergent is not dispensed completely or not dispensed at all.	**Too much detergent is used.** • Follow the guidelines provided by the detergent manufacturer.
	Drain Pump Filter may be blocked. • Clean the Drain filter.
Cycle time is longer than usual.	**The load is too small.** • Add more items to allow the appliance to balance the loads.
	Heavy articles are mixed with lighter items. • Always try to wash articles with similar weight in order to allow the appliance to evenly distribute the weight of the load for spinning.
	The load is out of balance. • Manually redistribute the load if articles have become tangled.
Cycle end is delayed	**Unbalance is detected or suds removing programme is on.** • This is normal. The time remaining shown on the display is only an estimated duration. Actual time may vary.

Performance

Symptoms	Possible Cause & Solution
Poor stain removal	**Previously set stains.** • Articles that have been previously washed may have stains which have been set. These stains may be difficult to remove and may require hand washing or pre-treating to aid in stain removal.
Staining	**Bleach or softener is dispensed too soon.** • Dispenser compartment is overfilled. It makes bleach or softer dispensed rapidly. Always measure bleach or softener to prevent overfilling. • Close the detergent dispenser slowly.

global_main.book.book Page 66 Sunday, October 16, 2022 2:28 PM

Symptoms	Possible Cause & Solution
Staining	**Bleach or softener was added directly to the clothes in the drum.** • Always use the detergent dispenser to ensure that bleach or softener is properly dispensed at the right time in the programme.
	Clothes were not properly sorted. • Always wash dark colours separately from light colours and whites to prevent discoloration. • Never wash heavily soiled items with lightly soiled items.
Wrinkling	**Appliance is not unloaded promptly.** • Always remove items from the appliance as soon as the programme is complete.
	Appliance is overloaded. • The appliance can be fully loaded, but the drum should not be tightly packed with items. The door of the appliance should be closed easily.
	Hot and cold water supply hoses are reversed. • Hot water rinse can set wrinkles in garments. Check the supply hose connections.
	Spin speed may be too high. • Set the spin speed to suit the garment type.

Odour

Symptoms	Possible Cause & Solution
Musty or mildewy odour in appliance	**Inside of drum is not cleaned properly.** • Run the **Tub Clean** function regularly.
	Odours can occur if the drain hose is not properly installed, causing siphoning (water flowing back inside of the appliance). • When installing the drain hose, make sure that it does not get kinked or blocked.

global_main.book.book Page 67 Sunday, October 16, 2022 2:28 PM

Symptoms	Possible Cause & Solution
Musty or mildewy odour in appliance	**If the detergent dispenser is not cleaned regularly, odours can occur from mold or foreign substances.** • Remove and clean the detergent dispenser, especially the top and bottom of the dispenser's opening.

ezDispense

Symptoms	Possible Cause & Solution
Refill Alarm continues to display when detergent/ softener is added.	**Detergent/softener has built up on the fluid level sensor.** • Open the compartment covers and clean the insides of the **ezDispense** compartments with warm water. Use a soft brush to remove any residue. If the **Refill Alarm** is displayed continuously, call for service.
	The amount of detergent/softner is not enough for the sensor to detect. • Fill the detergent/softner up to the **MAX** line in the compartment.
Too much/too little detergent or softener dispensed.	**The default dispense amounts setting may need to be changed.** • Check and change the default dispense amounts setting.
The ezDispense doesn't dispense detergent/ softener.	**The ezDispense function is off.** • Turn on the **ezDispense** function.
	The ventilation holes are blocked. • Clean the ventilation holes for the lids on the compartments with warm water.
	The detergent or softener in the ezDispense compartments has hardened. • Clean the **ezDispense** compartments and change the detergent or softener.

global_main.book.book Page 68 Sunday, October 16, 2022 2:28 PM

Symptoms	Possible Cause & Solution
There's foam on the rinsing course, and there's detergent left on the clothes after the washing.	**Detergent was used when rinsing.** • Please make sure that the detergent/softner is stored correctly. (right: detergent / left: softener)
After the washing, there's a scum on the cloth.	**You need to clean the inside of the ezDispense system.** • When using both dispensers for liquid detergent, make sure to run the **ezDispense Nozzle Clean** in advance.
Detergent, softener leaks from the lid of the ezDispense compartments.	**You need the ezDispense compartment's horizontal maintenance.** • Leakage occurs when the **ezDispense** compartment is tilted. Slide the **ezDispense** compartment out or in slowly and use both hands for safety.
	The lid isn't fully closed. • Securely close the lids to the **ezDispense** compartments. Be careful not to lose the lids.

Wi-Fi

Symptoms	Possible Cause & Solution
Your home appliance and smartphone are not connected to the Wi-Fi network.	**The password for the Wi-Fi that you are trying to connect to is incorrect.** • Find the Wi-Fi network connected to your smartphone and remove it, then register your appliance on **LG ThinQ**.
	Mobile data for your smartphone is turned on. • Turn off the **Mobile data** of your smartphone and register the appliance using the Wi-Fi network.
	The wireless network name (SSID) is set incorrectly. • The wireless network name (SSID) should be a combination of English letters and numbers. (Do not use special characters).

global_main.book.book Page 69 Sunday, October 16, 2022 2:28 PM

Symptoms	Possible Cause & Solution
Your home appliance and smartphone are not connected to the Wi-Fi network.	**The router frequency is not 2.4 GHz.** • Only a 2.4 GHz router frequency is supported. Set the wireless router to 2.4 GHz and connect the appliance to the wireless router. To check the router frequency, check with your internet service provider or the router manufacturer.
	The distance between the appliance and the router is too far. • If the distance between the appliance and the router is too far, the signal may be weak and the connection may not be configured correctly. Move the location of the router so that it is closer to the appliance.

Customer Care and Service

Contact an LG Electronics customer information centre.

- To find an LG Electronics authorised service personnel, visit our website at **www.lg.com** and follow the instructions found there.
- Self-repair is not recommended as it could further damage the device and void the guarantee.
- Spare parts referenced in Regulation 2019/2023 are available for a minimum duration of 10 years.

Memo

Memo

global_main.book.book Page 70 Sunday, October 16, 2022 2:28 PM

LG
Life's Good