LG
Life's Good

OWNER'S MANUAL

Wireless Sound Bar

Please read this manual carefully before operating your set and retain it for future reference.
FOR THE GUARANTEE TERMS & CONDITIONS, PLEASE REFER TO BACK COVER OF THIS MANUAL.

LAS455H (LAS455H, S55A1-D)

www.lg.com

Safety Information

CAUTION

RISK OF ELECTRIC SHOCK DO NOT OPEN

CAUTION: TO REDUCE THE RISK OF ELECTRIC SHOCK DO NOT REMOVE COVER (OR BACK) NO USER-SERVICEABLE PARTS INSIDE REFER SERVICING TO QUALIFIED SERVICE PERSONNEL.

This lightning flash with arrowhead symbol within an equilateral triangle is intended to alert the user to the presence of uninsulated dangerous voltage within the product's enclosure that may be of sufficient magnitude to constitute a risk of electric shock to persons.

The exclamation point within an equilateral triangle is intended to alert the user to the presence of important operating and maintenance (servicing) instructions in the literature accompanying the product.

WARNING: This product contains chemicals known to the State of California to cause cancer and birth defects or other reproductive harm. ***Wash hands after handling.***

WARNING: TO PREVENT FIRE OR ELECTRIC SHOCK HAZARD, DO NOT EXPOSE THIS PRODUCT TO RAIN OR MOISTURE.

CAUTION: The apparatus shall not be exposed to water (dripping or splashing) and no objects filled with liquids, such as vases, shall be placed on the apparatus.

WARNING: Do not install this equipment in a confined space such as a book case or similar unit.

CAUTION: Do not use high voltage products around this product. (ex. Electrical swatter) This product may malfunction due to electrical shock.

CAUTION: Do not block any ventilation openings. Install in accordance with the manufacturer's instructions.
Slots and openings in the cabinet are provided for ventilation and to ensure reliable operation of the product and to protect it from over heating. The openings shall be never be blocked by placing the product on a bed, sofa, rug or other similar surface. This product shall not be placed in a built-in installation such as a bookcase or rack unless proper ventilation is provided or the manufacturer's instruction has been adhered to.

CAUTION concerning the Power Cord

Most appliances recommend they be placed upon a dedicated circuit;

That is, a single outlet circuit which powers only that appliance and has no additional outlets or branch circuits. Check the specification page of this owner's manual to be certain. Do not overload wall outlets. Overloaded wall outlets, loose or damaged wall outlets, extension cords, frayed power cords, or damaged or cracked wire insulation are dangerous. Any of these conditions could result in electric shock or fire. Periodically examine the cord of your appliance, and if its appearance indicates damage or deterioration, unplug it, discontinue use of the appliance, and have the cord replaced with an exact replacement part by an authorized service center. Protect the power cord from physical or mechanical abuse, such as being twisted, kinked, pinched, closed in a door, or walked upon. Pay particular attention to plugs, wall outlets, and the point where the cord exits the appliance. The Power Plug is the disconnecting device. In case of an emergency, the Power Plug must remain readily accessible

NOTICE: For Product Identification and Compliance/Safety labeling information please refer to Main Label on the bottom of Unit.

This device is equipped with a portable battery or accumulator.

Safety way to remove the battery from the equipment: Remove the old battery or battery pack, follow the steps in reverse order than the assembly. To prevent contamination of the environment and bring on possible threat to human and animal health, the old battery or the battery put it in the appropriate container at designated collection points. Do not dispose of batteries or battery together with other waste. It is recommended that you use local, free reimbursement systems batteries and accumulators. The battery should not be exposed to excessive heat such as sunshine, fire or the like.

For models using an adapter

Only use the AC adapter supplied with this device. Do not use a power supply from another device or another manufacturer. Using any other power cable or power supply may cause damage to the device and void your warranty.

Disposal of your old appliance

1. This crossed-out wheeled bin symbol indicates that waste electrical and electronic products (WEEE) should be disposed of separately from the municipal waste stream.
2. Old electrical products can contain hazardous substances so correct disposal of your old appliance will help prevent potential negative consequences for the environment and human health. Your old appliance may contain reusable parts that could be used to repair other products, and other valuable materials that can be recycled to conserve limited resources
3. You can take your appliance either to the shop where you purchased the product, or contact your local government waste office for details of your nearest authorised WEEE collection point. For the most up to date information for your country please see www.lg.com/global/recycling

Disposal of waste batteries/accumulators

Pb

1. This symbol may be combined with chemical symbols for mercury (Hg), cadmium (Cd) or lead (Pb) if the battery contains more than 0.0005% of mercury, 0.002% of cadmium or 0.004% of lead.
2. All batteries/accumulators should be disposed separately from the municipal waste stream via designated collection facilities appointed by the government or the local authorities.
3. The correct disposal of your old batteries/ accumulators will help to prevent potential negative consequences for the environment, animal and human health.
4. For more detailed information about disposal of your old batteries/ accumulators, please contact your city office, waste disposal service or the shop where you purchased the product. (http://www.lg.com/global/sustainability/environment/take-back-recycling/global-network-europe)

Declaration of Conformity

CE 0197

Hereby, LG Electronics European Shared Service Center B.V., declares that this Wireless Sound Bar is compliant with the essential requirements and other relevant provisions of Directive 1999/5/EC. The complete Declaration of Conformity may be requested through the following postal address:

LG Electronics European Shared Service Center B.V.
Krijgsman 1
1186 DM Amstelveen
The Netherlands

or can be requested at our dedicated DoC website:

http://www.lg.com/global/support/cedoc/cedoc#

This device is a 2.4 GHz wideband transmission system, intended for use in all EU member states and EFTA countries.

Table of Contents

1 Getting Started

2 Safety Information
6 Unique features
6 Introduction
6 – Symbols used in this manual
6 Accessories
7 Remote control
8 Front panel
8 Rear panel
9 Installing the sound bar
10 Mounting the main unit on a wall

2 Connecting

12 Wireless subwoofer connection
13 Connecting to your TV
13 – Using an OPTICAL cable
13 – Using an HDMI cable
14 – Enjoy rich sound broadcast of the channel with the sound bar
15 – ARC (Audio Return Channel) function
15 – Additional information for HDMI
16 Optional equipment connection
16 – HDMI connection
17 – OPTICAL IN connection
17 – PORTABLE IN connection
18 – USB connection
18 – Compatible USB devices
18 – USB device requirement
19 – Playable file

3 Operating

20 Basic operations
20 – USB operation
21 Other operations
21 – AV Sync
21 – Turn off the sound temporarily
21 – Displaying file and input source
21 – Auto Dimmer
22 – Using your TV remote control
23 – AUTO POWER On/Off
24 – Auto function change
25 – LG Sound Sync
26 Using BLEUTOOTH® technology
27 – Listening to music stored on the Bluetooth devices
28 Using BLUETOOTH App
28 – Install "Music Flow Bluetooth" App onto Your BLUETOOTH Device
29 – Activate BLUETOOTH with "Music Flow Bluetooth" App
30 Sound adjustment
30 – Setting sound effect
30 – Adjust volume level automatically
31 – Adjust the Treble/Bass/Sub-woofer
31 – Night mode

4 Troubleshooting

32 Troubleshooting

5 Appendix

34 Trademarks and licenses
35 Specifications
37 Maintenance
37 – Handling the unit

6 Warranty

38 Warranty

Unique features

Auto power down

This unit will turn off by itself for energy saving consumption.

Portable In

Listens to music from your portable device. (MP3, Notebook, etc)

LG Sound Sync

Controls volume level of this unit by the remote control of your LG TV that is compatible with LG Sound Sync.

Introduction

Symbols used in this manual

Note

Indicates special notes and operating features.

Caution

Indicates cautions for preventing possible damages from abuse.

Accessories

Please check and identify the supplied accessories.

Designs and specifications of the accessories are subject to change without prior notice.

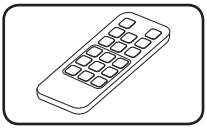

Remote control (1)

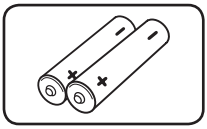

Batteries (2)

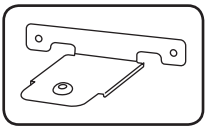

Wall bracket (2)

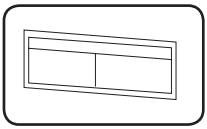

Wall bracket install guide (1)

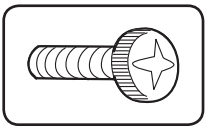

Screws (2)

Remote control

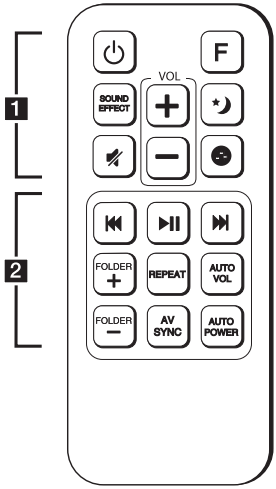

Battery Installation

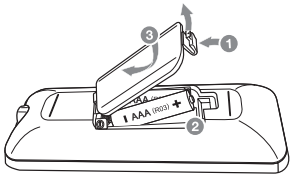

Remove the battery cover on the rear of the Remote Control, and insert two R03 (size AAA) batteries with ⊕ and ⊖ matched correctly.

1

⏻ (Power) **:** Switches the unit ON or OFF. / Switches to the standby mode.

F : Selects the function and the input source.

SOUND EFFECT : Selects a sound effect mode.

VOL +/— : Adjusts speaker volume.

(Night mode) **:** Turns on or off Night mode.

(Mute) **:** Mutes the sound.

: Adjusts sound level of Treble, Bass and Sub-woofer.

2

⏮ / ⏭ (Skip/Search) **:**
- Skips Fast backward or Forward.
- Searches for a section within a file.

▶II (Play/Pause) **:** Starts playback. / Pauses playback.

FOLDER +/— : Searches a folder on USB device.

REPEAT :
- Listen to your files repeatedly or randomly.
- Displays the information of a file or an input source. (Refer to the page 21)

AUTO VOL : Turns on and off the AUTO VOLUME mode.

AV SYNC :
- Synchronizes the audio and video.
- Controls TV remote (Refer to the page 22)

AUTO POWER : Turns on or off AUTO POWER function. (Refer to the page 23.)

Front panel

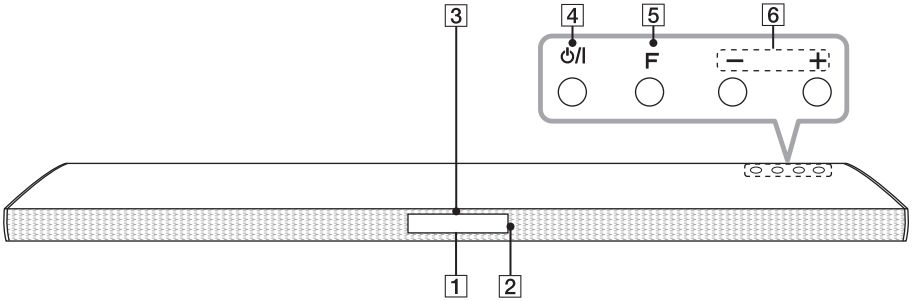

1 Display window

2 Remote sensor

3 Standby LED
It lights up in red on standby mode.

4 ⏻ / I (Standby/On)

5 **F** (Function)
Selects the function and input source.

6 — / + (Volume)
Adjusts volume level.

Rear panel

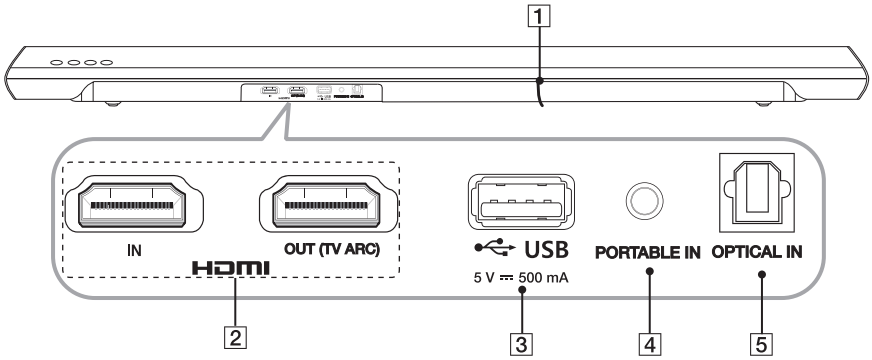

1 Power cord

2 **HDMI IN / OUT (TV ARC) :** HDMI input / output

3 USB port

4 **PORTABLE IN :** Portable input

5 **OPTICAL IN :** Optical input

Installing the sound bar

You can hear the sound by connecting the unit to the other device : TV, Blu-ray disc player, DVD player, etc.

Place the unit in front of the TV and connect it to the device you want. (Refer to pages 13 - 18.)

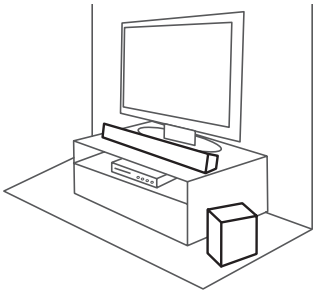

Caution

- For best performance of wireless connection such as Bluetooth or wireless subwoofer, do not install the unit on Metallic furniture because wireless connection communicates through a module positioned on the bottom of the unit.
- Be careful not to make scratches on the surface of the Unit /Sub-Woofer when installing or moving them.

Mounting the main unit on a wall

You can mount the main unit on a wall.

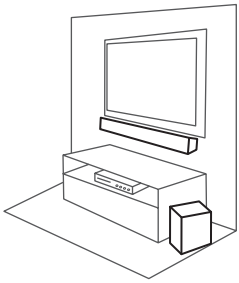

Caution

Because it is difficult to make a connection after installing this unit, you should connect the cables before installation.

Preparation materials

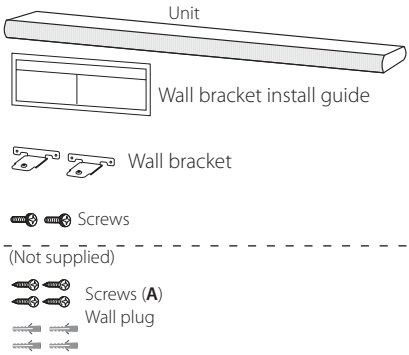

1. Match the TV's BOTTOM EDGE of Wall bracket install guide with the bottom of TV and attach to the position.

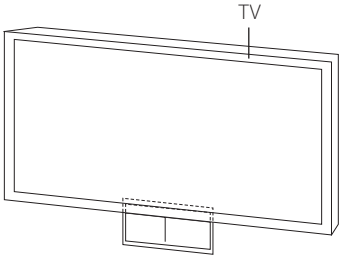

2. When you mount it on a wall (concrete), use the wall plugs. You should drill some holes. A guide sheet (Wall bracket install guide) is supplied to drill. Use the sheet to check the point to drill.

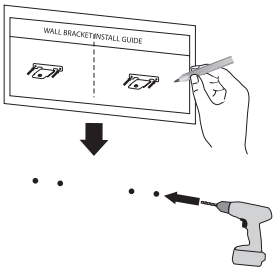

3. Remove the Wall bracket install guide.

4. Fix the brackets with screws (**A**) as shown in the illustration below.

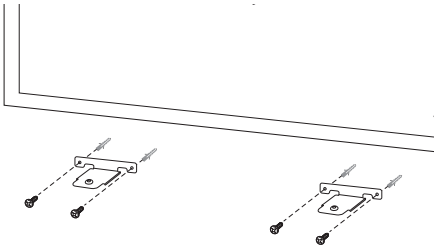

Note

Screws (**A**) and Wall Plugs are not supplied for mounting the unit. We recommend the Hilti (HUD-1 6 x 30) for the mounting.

5. Put the unit on the brackets to match screw holes on the bottom of the unit.

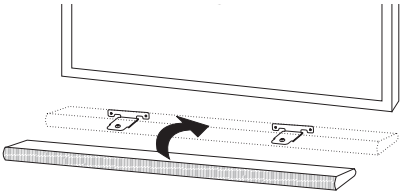

6. Fix the unit with the screws firmly.

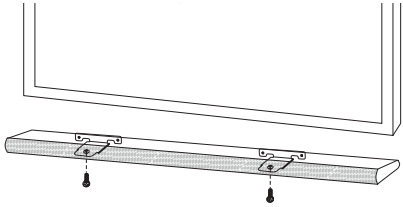

Note

To detach the unit, perform it in reverse order.

Caution

- Do not install this unit upside down. It can damage the parts of this unit or be the cause of personal injury.
- Do not hang onto the installed unit and avoid any impact to the unit.
- Secure the unit firmly to the wall so that it does not fall off. If the unit falls off, it may result in an injury or damage to the product.
- When the unit is installed on a wall, please make sure that a child does not pull any of connecting cables, as it may cause it to fall.

Wireless subwoofer connection

LED indicator of wireless subwoofer

LED Color	Status
Yellow-green (Blink)	The connection is trying.
Yellow-green	The connection is completed.
Red	The wireless subwoofer is in standby mode or the connection is failed.
Off (No display)	The power cord of wireless subwoofer is disconnected.

Setting up the wireless subwoofer for the first time

1. Connect the power cord of the wireless subwoofer to the outlet.
2. Turn on the main unit : The main unit and wireless subwoofer will be automatically connected.

Manually pairing wireless subwoofer

When your connection is not completed, you can see the red LED or the blinking of yellow-green LED on the wireless subwoofer and the subwoofer does not make sound. To solve the problem, follow the below steps.

1. Adjust volume level of the main unit to minimum.
   - "VOL MIN" appears on the display window.
2. Press and hold (Mute) on the remote control for about 3 seconds.
   - "WL RESET" appears on the display window briefly and Red LED on the main unit is blinking
3. If the LED of the wireless subwoofer already blinks in yellow-green continually, you can skip this step.

   Press and hold **PAIRING** on the back of the wireless subwoofer for more than 5 seconds.

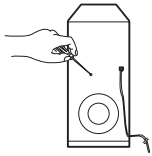

   - The LED of the wireless subwoofer lights up alternately in red and yellow-green.
4. Disconnect the power cord of the main unit and the wireless subwoofer.
5. Connect them again after the LED of the main unit and the wireless subwoofer is fully turned off.

   The main unit and the wireless subwoofer will be paired automatically when you turn on the main unit.
   - When the connection is completed, you can see the yellow-green LED on the subwoofer.

Note

- It takes a few seconds (and may take longer) for the main unit and the subwoofer to communicate with each other and make sounds.
- The closer the main unit and the subwoofer, the better sound quality. It is recommended to install the main unit and the subwoofer as close as possible and avoid the cases below.
  - There is a obstacle between the main unit and the subwoofer.
  - There is a device using same frequency with this wireless connection such as a medical equipment, a microwave or a wireless LAN device.

Connecting to your TV

Please connect with this unit and TV using the optical digital cable or HDMI cable considering the state of the TV.

Using an OPTICAL cable

1. Connect the OPT. IN jack on the back of the unit to OPTICAL OUT jack on the TV using an OPTICAL cable.

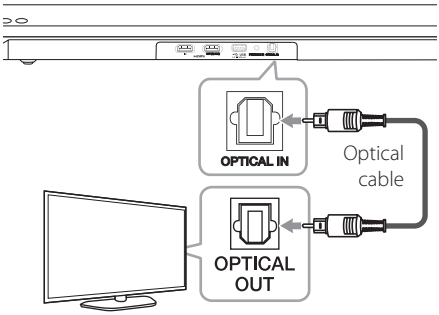

2. Select the input source to OPTICAL by pressing **F** button repeatedly.

Note

- Before connecting the optical cable, be sure to remove the protection plug cover if your cable has the cover.
- You can enjoy the TV audio through the speakers of this unit. In the case of some TV models, you must select the external speaker option from the TV menu. (For details, reference your TV user manual.)
- Set up the sound output of TV to listen to the sound through this unit :
  TV setting menu ➞ [Sound] ➞ [TV Sound output] ➞ [External speaker (Optical)]
- Details of TV setting menu vary depending on the manufacturers or models of your TV.

Using an HDMI cable

If you connect this unit to a TV that supports HDMI CEC and ARC (Audio Return Channel), you can enjoy the TV audio through the speakers of this unit without connecting the optical cable. Please refer to your TV user manual when you check HDMI CEC/ ARC function of your TV.

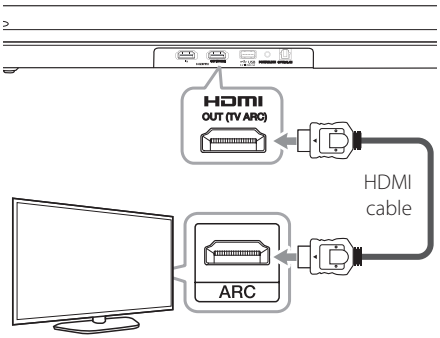

Note

- HDMI CEC (Consumer Electronics Control): Using a single remote control, you have the ability to operate CEC compatible devices (TV, Sound Bar, Blue-ray player, etc.)
- You can also enjoy extra functions such as USB / **Bluetooth** with **F** pressing button on the remote or unit. When you go back to live TV channel after using the extra functions (USB / **Bluetooth**) of this audio system, you should choose your preferred speaker on TV to enjoy the sound from this audio system again.

HDMI cable Checklist

Some HDMI cables do not support the ARC function, this can result in no sound output.

When connecting this unit to the TV, if there is no sound, there might be a problem with the HDMI cable. Therefore connect this unit to the TV and check whether the Type A, High speed HDMI™ Cable with Ethernet.

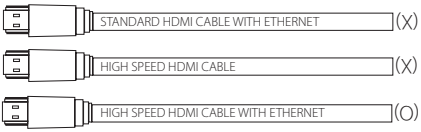

Enjoy rich sound broadcast of the channel with the sound bar

Connection through HDMI Cable

Your television must support the newest HDMI features (HDMI CEC[1)] / ARC (Audio Return Channel)) to fully enjoy the Live broadcasting channel with audio system through an HDMI cable. Unless your TV supports these HDMI features, the audio system should be connected through an OPTICAL cable.

1) HDMI CEC (High-Definition Multimedia Interface Consumer Electronics Control)

Consumer Electronics Control (CEC) is an HDMI feature designed to allow the user to command and control the CEC-enabled devices, that are connected through HDMI by using only one of their remote controls.

※ Trade names for CEC are SimpLink (LG) , Anynet+ (Samsung), BRAVIA Sync/ Link (Sony), EasyLink (Philips), EZ-Sync/ VIERA Link (Panasonic), etc..

What is SIMPLINK?

Some functions of this unit are controlled by the TV's remote control when this unit and LG TV's with SIMPLINK are connected through HDMI connection.

Controllable functions by LG TV's remote control : Power on/off, volume up/down, mute, etc.

Refer to the TV owner's manual for the details of SIMPLINK function.

LG TV's with SIMPLINK function has the logo as shown above.

Note

- Depending on the state of the unit, some SIMPLINK operation may differ from your purpose or not work.
- Depending on a TV or a player which is connected with this unit, SIMPLINK operation may differ from your purpose.

ARC (Audio Return Channel) function

The ARC function enables an HDMI capable TV to send the audio stream to HDMI OUT of the unit.

To use this function :

- Your TV must support the HDMI-CEC and ARC function and the HDMI-CEC and ARC must be set to On.
- The setting method of HDMI-CEC and ARC may differ depending on the TV. For details about ARC function, refer to your TV manual.
- You must use the HDMI cable (Type A, High Speed HDMI™ cable with Ethernet).
- You must connect the HDMI OUT on the unit with HDMI IN of the TV that supports ARC function using an HDMI cable.
- You can connect only one Sound bar to TV compatible with ARC.

Note

- ARC function is automatically selected when ARC signal comes in from TV, no matter what kind of the function you are using.
- You can enjoy the TV audio through the speakers of this unit. In the case of some TV models, you must select the external speaker option from the TV menu. (For details, reference your TV user manual.)
- Set up the sound output of TV to listen to the sound through this unit :
  TV setting menu → [Sound] → [TV Sound output] → [External speaker (HDMI ARC)]
- Details of TV setting menu vary depending on the manufacturers or models of your TV.
- If you change to other function while you are using ARC function, you need to adjust ARC setting on TV setting again to use ARC function.

Additional information for HDMI

- When you connect an HDMI or DVI compatible device make sure of the following:
  - Try switching off the HDMI/DVI device and this player. Next, switch on the HDMI/DVI device and leave it for around 30 seconds, then switch on this player.
  - The connected device's video input is set correctly for this unit.
  - The connected device is compatible with 720 x 576p (or 480p), 1280 x 720p, 1920 x 1080i ,1920 x 1080p or 4096 x 2160p video input.
- Not all HDCP-compatible HDMI or DVI devices will work with this player.
  - The picture will not be displayed properly with non-HDCP device.

Note

- If a connected HDMI device does not accept the audio output of the player, the HDMI device's audio sound may be distorted or may not output.
- Changing the resolution when the connection has already been established may result in malfunctions. To solve the problem, turn off the player and then turn it on again.
- When the HDMI connection with HDCP is not verified, TV screen is changed to black screen. In this case, check the HDMI connection, or disconnect the HDMI cable.
- If there are noises or lines on the screen, please check the HDMI cable (length is generally limited to 4.5 m(15 ft).
- You cannot change the video resolution in the HDMI IN mode. Change the video resolution of the connected component.
- If the video output signal is abnormal when your personal computer is connected to HDMI IN jack, change the resolution of your personal computer to 576p (or 480p), 720p, 1080i or 1080p.

Optional equipment connection

HDMI connection

You can enjoy the sound and picture from HDMI connection on external device.

For enjoying sound only

You can enjoy the sound from the external device you connect.

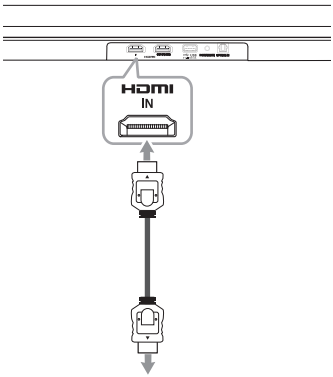

To the Blu-ray disc player, DVD player, etc.

1. Connect HDMI IN jack on the back of the unit to HDMI OUT jack on the audio device such as Blu-ray disc player, DVD player, etc.
2. Select the input source to HDMI IN by pressing **F** button repeatedly.

For enjoying both sound and picture

You can enjoy both sound and picture from the external device you connect.

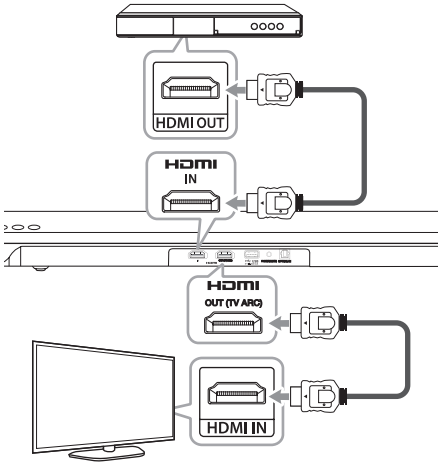

1. Connect HDMI IN jack on the back of the unit to HDMI OUT jack on the external device such as Blu-ray disc player, DVD player, etc.
2. Connect HDMI OUT jack on the back of the unit to HDMI IN jack on the TV.
3. Select the input source to HDMI IN by pressing **F** button repeatedly.

Note

- With the unit connected to external devices and TV as above illustration, TV will output picture and sound from external devices when the unit is turned off in HDMI IN mode.
- HDMI OUT jack is for TV connection. Even though multi channel is inputted to the unit through an HDMI cable, the unit can only output 2 channel to TV.
- When this unit is turned off, multi channel audio sources will be passed through without transformation.

OPTICAL IN connection

Connect an optical output jack of external devices to the OPTICAL IN jack.

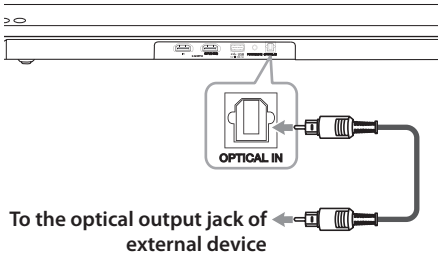

1. Connect the OPTICAL IN jack on the back of the unit to optical out jack of your TV (or digital device etc.)
2. Select the input source to OPTICAL by pressing **F** button repeatedly.
3. Listen to sound.
4. Press **F** to exit from OPTICAL.

Note

Before connecting the optical cable, be sure to remove the protection plug cover if your cable has the cover.

PORTABLE IN connection

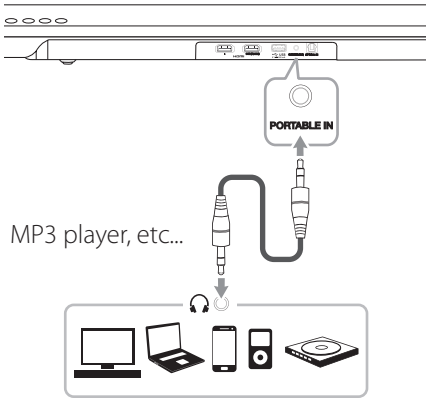

Listening to music from your portable player

The unit can be used to play the music from many types of portable players or external devices.

1. Connect the portable player to the PORTABLE IN connector of the unit by using 3.5 mm stereo cable.
2. Turn the power on by pressing ⏻ (Power).
3. Select the input source to PORTABLE by pressing **F** button repeatedly.
4. Turn on the portable player or external device and start playing it.

USB connection

Connect USB memory device to the USB port on the back of the unit.

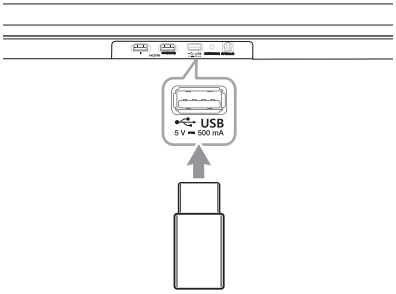

For more information of playing files on a USB, refer to the page 20.

Removing the USB Device from the unit.

1. Choose a different function/mode.
2. Remove the USB device from the unit.

Compatible USB devices

- MP3 Player : Flash type MP3 player.
- USB Flash Drive : Devices that support USB 2.0.
- The USB function of this unit does not support some USB devices.

USB device requirement

- Devices which require additional program installation connected to a computer, are not supported.
- Do not extract the USB device while in operation.
- For a large capacity USB, it may take longer than a few minutes to be searched.
- To prevent data loss, back up all data.
- This unit is not supported when the total number of files is 2000 or more.
- The unit's USB Port cannot be connected to PC. The unit can not be used as a storage device.
- The exFAT file system is not supported on this unit. (FAT16/FAT32/NTFS systems are available.)
- Depending on some devices, it may not available to recognize the followings on this unit.
  - External HDD
  - Card readers
  - Locked devices
  - Hard type USB devices
  - USB hub
  - Using USB extension cable
  - iPhone/iPod/iPad
  - Android device

Playable file

Sampling Frequency

MP3 : within 32 to 48 kHz
WMA : within 32 to 48 kHz
OGG : within 32 to 48 kHz
FLAC : within 32 to 192 kHz
WAV : within 32 to 48 kHz

Bitrate

MP3 : within 80 to 320 kbps
WMA : within 56 to 128 kbps
OGG : within 64 to 500 kbps
FLAC : within 500 to 5000 kbps
WAV : within 500 to 5000 kbps

- Maximum files : Under 2000
- A protected file by DRM (Digital rights management) cannot be played on the unit.
- Video files in the USB storage device can not be played.
- Depending on the performance of your USB device, playback may not work well.

Note

- Folders and files on the USB are recognized as below.

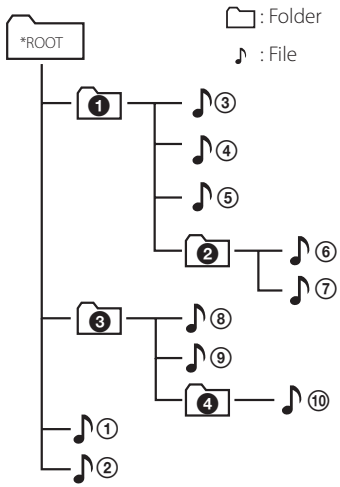

- If there is no file in a folder, the folder will not appear.
- File will be played from file ♪① to file ♪⑩ one by one.
- Files and folders will be presented in order recorded and may be presented differently depending on the record circumstances.
- This unit can display file or folder names that contain numbers or English characters only.
- *ROOT : The first screen you can see when a computer recognize the USB is "ROOT".

Basic operations

USB operation

1. Connect the USB device to the USB port.
2. Select the input source to USB by pressing **F** button repeatedly.

To	Do this
Playback	Press ▶II.
Pause	During playback, press ▶II.
Skip to the next/ previous file	During playback, press ▶▶I on the remote control to go to the next file. Playing less than 2 seconds, press I◀◀ on the remote control to go to the previous file. Playing after 3 seconds, press I◀◀ on the remote control to go to the beginning of the file.
Search for a section within a file	Press and hold I◀◀ / ▶▶I during playback and release it at the point you want to listen to.
Play repeatedly or randomly	Press **REPEAT** on the remote control repeatedly, the display will be changed in the following order, OFF → ONE → FOLDER → ALL → RANDOM.
Search a folder	Press **FOLDER** +/— on the remote control.
Resume playback	This unit memorizes a current song which is played before changing the function or turning off the unit.

Note

- The resume point may be cleared when you pull out the power cord or removing the USB device from the unit.
- Repeat/Random playback operates as follows.

On Display	Description
OFF	Plays songs on USB device in order.
ONE	Plays a same song repeatedly.
FOLDER	Plays songs in a folder repeatedly.
ALL	Plays all the songs on USB device repeatedly.
RANDOM	Plays songs randomly.

Other operations

AV Sync

When receiving audio signals from TV, sound and images may not be matched. In the case, this function can adjust the delay time.

1. Press **AV SYNC**.
2. Use ⏮ / ⏭ to scroll up and down through the delay amount, which you can set at anything between 0 and 300 ms.

Note

This function does not operate on USB function.

Turn off the sound temporarily

Press 🔇(Mute) to mute your unit.

You can mute your unit, for example, to answer the telephone, "MUTE" is displayed in the display window.

To cancel it, press 🔇(Mute) again on the remote control or change the volume level.

Displaying file and input source

You can display various information of the input source. Press and hold **REPEAT** for 3 seconds.

USB : File information contained on a USB (MP3/WMA/OGG/FLAC/WAV)

OPTICAL/ARC/HDMI IN : Audio format, Audio channel

BT (**Bluetooth**) : The address of the connected **Bluetooth** device.

Auto Dimmer

Display window will be darkened automatically if there is no key input for 3 seconds.

Using your TV remote control

You can control some functions of this unit by your TV remote control even by other company's product.
Controllable functions are volume up/down and mute.

Press and hold **AV SYNC** on the remote control for about 3 seconds. "ON - TV REMOTE" appears and you can control this unit by your TV remote control.

To check the status of this function, press and hold **AV SYNC**.

To turn off this function, press and hold **AV SYNC** and press it once again while "ON - TV REMOTE" is scrolled.

Note

- Supported TV brands

LG	Panasonic	Philips	Samsung
Sharp	Sony	Toshiba	Vizio

- Make sure that the sound output of your TV is set to [External speaker].
- Depending on the remote control, this function may not work well.
- This function may not work well when some TV control functions such as CEC, SIMPLINK and LG Sound Sync set to ON.

Auto power down

This unit will be off itself to save electric consumption in the case main unit is not connected to external device and is not used for 20 minutes.

So does this unit after six hours since Main unit has been connected to other device using analog input. (Ex : Portable, etc..)

How to disconnect the wireless network connection or the wireless device

Set up the AUTO POWER ON/OFF function to off and turn off the unit.

AUTO POWER On/Off

This unit automatically turns on by an input source : Optical, LG TV or **Bluetooth**.

When you turn on your TV or an external device connected to this unit, this unit recognizes the input signal and select the suitable function. You can hear the sound from your device.

If you try to connect your **Bluetooth** device, this unit turns on and ready to pair. Connect your **Bluetooth** device and play your music.

This function turns on or off each time you press **AUTO POWER**.

Note

- After the unit is turned on by AUTO POWER function, it will be automatically turned off if there is no signal for a certain period of time from the TV connected by LG Sound Sync (Optical/Wireless).
- After the unit is turned on by AUTO POWER function, it will be automatically turned off if there is no signal for a certain period of time from the external device.
- If you turned off the unit directly, it cannot be turned on automatically by AUTO POWER function. However the unit can be turned on by AUTO POWER function when optical signal comes in after 5 seconds of no signal.
- Depending on the connected device, this function may not operate.
- If you disconnect **Bluetooth** connection by this unit, some **Bluetooth** devices try to connect to the unit continually. Therefore it is recommended to disconnect the connection before turn off the unit.
- If you want to use AUTO POWER, SIMPLINK must be turned off. It takes for about 30 seconds to switch on or off SIMPLINK.
- When you turn on this unit for the first time, Auto Power function is turned on status.

Auto function change

This unit recognizes input signals such as optical, **Bluetooth** and LG TV and then changes suitable function automatically.

When optical signal comes in

When you turn on the external device connected to this unit by an optical cable, this unit change the function to optical. You can hear the sound from your device.

When you try to connect Bluetooth device

When you try to connect your **Bluetooth** device to this unit, **Bluetooth** function is selected. Play your music on the **Bluetooth** device.

When LG TV signal comes in

When you turn on your LG TV connected by LG Sound Sync (Wireless connection), this unit changes the function to LG TV. You can hear the sound from your TV.

Note

- To change to optical function, it needs 5 seconds of no signal.
- This unit does not change the function to optical if SIMPLINK of the connected TV, Blu-ray disc player, set-top box or etc. device set to on or connected CEC supported device is turned on.
- If you want to use the auto function change, SIMPLINK must be turned off. It takes for about 30 seconds to turn off SIMPLINK.

LG Sound Sync

Sound Sync
Wireless

You can control some functions of this unit by your TV's remote control with LG Sound Sync. It is compatible with the LG TV that is supported LG Sound Sync. Make sure of the LG Sound Sync logo on your TV.

Controllable function by LG TV's remote control : Volume up/down, mute

Refer to the TV's instruction manual for the details of LG Sound Sync.

Make one of the following connections, depending on the capabilities of your equipment.

Note

- You can also use the remote control of this unit while using LG Sound Sync. If you use TV's remote control again, the unit synchronizes with the TV.
- When the connection fails, make sure of the condition of the TV and power.
- Make sure of the condition of this unit and the connection in the cases below when using LG Sound Sync.
  - Turn off the unit.
  - Changing the function to the others.
  - Disconnecting the optical cable.
  - Disconnecting the wireless connection caused by interference or a distance.
- The amount of time to turn off this unit is different depending on your TV when you set AUTO POWER function to ON.
- Details of TV setting menu vary depending on the models of your TV.

With wired connection

1. Connect your LG TV to the unit by using an optical cable.

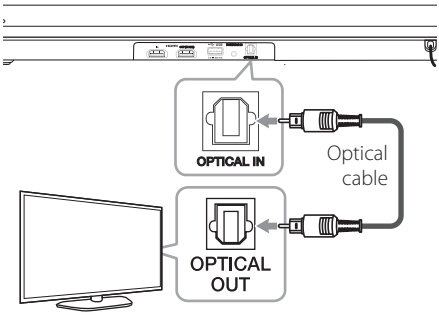

2. Set up the sound output of TV to listen to the sound through this unit :
   TV setting menu → [Sound] → [TV Sound output] → [LG Sound Sync (Optical)]
3. Turn on the unit by pressing ⏻ (Power) on the remote control.
4. Select the input source to OPTICAL by pressing **F** button repeatedly.

   You can see "LG OPT" on the display window if connecting normally between this unit and your TV.

With wireless connection

1. Turn on the unit by pressing ⏻ (Power) on the remote control.
2. Select the input source to LG TV by pressing **F** button repeatedly.
3. Set up the sound output of TV to listen to the sound through this unit :
   TV setting menu ➞ [Sound] ➞ [TV Sound output] ➞ [LG Sound Sync (Wireless)]

   "PAIRED" appears on the display window for about 3 seconds and then you can see "LG TV" on the display window if connecting normally between this unit and your TV.

Note

- If you turned off the unit directly by pressing ⏻ (Power), LG Sound Sync (Wireless) will be disconnected. To use this function again, you should reconnect the TV and the unit.

Using BLEUTOOTH® technology

About BLUETOOTH

Bluetooth is wireless communication technology for short range connection.

The sound may be interrupted when the connection interfered by the other electronic wave or you connect the **Bluetooth** in the other rooms.

Connecting individual devices under **Bluetooth** wireless technology does not incur any charges. A mobile phone with **Bluetooth** wireless technology can be operated via the Cascade if the connection was made via **Bluetooth** wireless technology.

Available Devices : Mobile phone, MP3, Laptop, PDA etc.

BLUETOOTH Profiles

In order to use **Bluetooth** wireless technology, devices must be able to interpret certain profiles. This unit is compatible with following profile.

A2DP (Advanced Audio Distribution Profile)

Listening to music stored on the Bluetooth devices

Pairing your unit and BLUETOOTH device

Before you start the pairing procedure, make sure the **Bluetooth** feature is turned on in to your **Bluetooth** device. Refer to your **Bluetooth** device's user guide. Once a pairing operation is performed, it does not need to be performed again.

1. Select the input source to BT (**Bluetooth**) by pressing **F** button repeatedly.
   Appears "BT" and then "BT READY" in display window.
2. Operate the **Bluetooth** device and perform the pairing operation. When searching for this unit with the **Bluetooth** device, a list of the devices found may appear in the **Bluetooth** device display depending on the type of **Bluetooth** device. Your unit appears as "LG LAS450H (XX)".

Note

- XX means the last two digits of **Bluetooth** address. For example, if your unit has a **Bluetooth** address such as 9C:02:98:4A:F7:**08**, you will see "LG LAS450H (**08**)" on your **Bluetooth** device.
- Depending on the **Bluetooth** device type, some device have a different pairing way. Enter the PIN code (0000) as needed.
- You can connect this unit with up to 3 **Bluetooth** device simultaneously same method as above description.
- The multi pairing connection is only supported on Android or iOS devices. (Multi pairing connection may not be supported depending on the connected device specifications.)
- Removable/detachable **Bluetooth** device (Ex : Dongle etc..) doesn't supported multi pairing.

3. When this unit is successfully connected with your **Bluetooth** device, "PAIRED" will be appear on the display window and change to **Bluetooth** device name soon.

Note

- "PAIRED" will be momentarily appear on the display when you connect other devices for multi pairing.
- If it is unavailable to display device name on the unit, "_" will be displayed.

4. Listen to music.
   To play a music stored on your **Bluetooth** device, refer to your **Bluetooth** device's user guide.

Note

- When using **Bluetooth** technology, you have to make a connection between the unit and the **Bluetooth** device as close as possible and keep the distance.
  However it may not work well in the case below :
  - There is a obstacle between the unit and the **Bluetooth** device.
  - There is a device using same frequency with **Bluetooth** technology such as a medical equipment, a microwave or a wireless LAN device.
- You should connect your **Bluetooth** device to this unit again when you restart it.
- Even if this unit connected up to 3 **Bluetooth** devices, you can play and control music by using only one of the connected devices.
- Only one device which you are playing keeps **Bluetooth** connection when you change the function to the others.

Note

- The sound may be interrupted when the connection interfered by the other electronic wave.
- You may not control the **Bluetooth** device with this unit.
- Depending on the type of the device, you may not be able to use the **Bluetooth** function.
- You can enjoy wireless system using phone, MP3, Notebook, etc..
- The more distance between the unit and the **bluetooth** device, the lower the sound quality becomes.
- **Bluetooth** connection will be disconnected when the unit is turned off or the **bluetooth** device gets far from the unit.
- When **Bluetooth** connection is disconnected, connect the **bluetooth** device to the unit again.
- When not connected the **Bluetooth**, "BT READY" appears on the display window.
- When you connect **Bluetooth** device (iOS device etc.) to this unit or operate the device, the volume level can be synchronized with each other.

Using BLUETOOTH App

Note

Only Android OS is available to use "Music Flow **Bluetooth** " app with this unit.

About "Music Flow Bluetooth" App

"Music Flow Bluetooth" app brings a suite of new features to this unit.

To enjoy more features, you are recommended to download and install free "Music Flow Bluetooth" app.

Install "Music Flow Bluetooth" App onto Your BLUETOOTH Device

There are two ways to install"Music Flow **Bluetooth**"App onto Your **Bluetooth** Device.

Install "Music Flow Bluetooth" App through QR code

1. Install "Music Flow Bluetooth" app through QR code. Use the scanning software to scan the QR code.

2. Tap an icon for installation.
3. Tap an icon for downloading.

Note

- Make sure that your **Bluetooth** device is connected to the Internet.
- Make sure that your **Bluetooth** device has a scanning software application. If you don't have one, download one from "Google Android Market (Google Play Store)".
- Depending on the area, QR code may not work.

Install "Music Flow Bluetooth" App through "Google Android Market (Google Play Store)"

1. Tap the "Google Android Market (Google Play Store)" icon.
2. In the search bar, type in the "Music Flow Bluetooth" and search it.
3. In the search result list, find and tap "Music Flow Bluetooth" to start downloading **Bluetooth** app.
4. Tap an icon for installation.
5. Tap an icon for downloading.

Note

- Make sure that your **Bluetooth** device is connected to the Internet.
- Make sure that your **Bluetooth** device is equipped with "Google Android Market (Google Play Store)".

Activate BLUETOOTH with "Music Flow Bluetooth" App

"Music Flow Bluetooth" app helps to connect your **bluetooth** device to this unit.

1. Tap "Music Flow Bluetooth" app icon on the home screen to open "Music Flow Bluetooth" app, and go to the main menu.
2. Tap [Menu] and select the unit you want.
3. If you want to get more information to operate, tap [Setting] and turn on the User guide.

Note

- "Music Flow Bluetooth" app will be available in the software version as follow;
  - Android O/S : Ver 4.0.3 (or later)
- If you use "Music Flow Bluetooth " app for operation, there would be some differences between "Music Flow Bluetooth" app and the supplied remote control. Use the supplied remote control as necessary.
- Depending on the **Bluetooth** device, "Music Flow Bluetooth" app may not work.
- After connection of "Music Flow Bluetooth" app, music may be output from your device. In this case, try connecting procedure again.
- If you operate the other applications or change the settings on your **Bluetooth** device while using "Music Flow Bluetooth " app, "Music Flow Bluetooth " app may operate abnormally.
- When "Music Flow Bluetooth" app operates abnormally, check your **Bluetooth** device and the connection of "Music Flow Bluetooth" app and then try to connect again.
- Depending on the smart phone's operating system, you have some differences for "Music Flow Bluetooth" operation.
- Even though **Bluetooth** connection will be disconnected, you can use "Music Flow Bluetooth" app when you change the function.

Sound adjustment

Setting sound effect

This system has a number of pre-set surround sound fields. You can select a desired sound mode by using **SOUND EFFECT**.

The displayed items for the equalizer may be different depending on sound sources and effects.

On Display	Description
STANDARD	You can enjoy optimized sound.
MUSIC	You can enjoy comfortable and natural sound.
CINEMA	You can enjoy more immersive and cinematic surround sound.
FLAT	Provides balanced sound.
BOOST	Boosts the mid-range for sound reinforcement.
TREBLE / BASS	Reinforces the treble and bass.

Note

- In some of sound effect mode, some speakers, there's no sound or low sound. It depends on the mode of surround and the source of audio, it is not defective.
- You may need to reset the sound effect mode, after switching the input, sometimes even after the sound file changed.

Adjust volume level automatically

This unit supports Auto volume function that automatically adjusts the volume level.

When the output sound is too loud or too low, press **AUTO VOL** on the remote control. So you can enjoy the sound with appropriate levels.

To cancel this function, press the button again.

Adjust the Treble/Bass/Sub-woofer

You can adjust the sound level of Treble, Bass and Sufwoofer as your preference.

TREBLE/BASS : -5 dB to 5 dB

SUBWF (Subwoofer) : -20 dB to 6 dB

1. Press button repeatedly to select TREBLE, BASS or SUBWF (Subwoofer).
2. Press **VOL +/—** to adjust the sound level.

Night mode

This function is useful when you want to watch movies at low volume late at night.

Press button on the remote control. So you can activate Night mode. To cancel it, press button again.

Troubleshooting

PROBLEM	CAUSE & CORRECTION
The unit does not work properly.	• Turn off the power of this unit and the connected external device (TV, Woofer, DVD-player, Amplifier, etc.) and turn it on again. • Disconnect the power cord of this unit and the connected external device (TV, Woofer, DVD-player, Amplifier, etc.) and then try connecting again. • Previous setting may not be saved when device power is shut off.
No Power	• The power cord is unplugged. Plug in the power cord. • Check the condition by operating other electronic devices.
No sound	• Incorrect input source is selected. Check the input source and select the correct input source. • The mute function is activated. Press (Mute) or adjust the volume level to cancel the mute function. • When you are using connection with a external device (set top box, **Bluetooth** device etc.), adjust volume level of the device.
No woofer sound	• The power cord of the subwoofer is not connected. Plug the power cord into the wall outlet securely. • Pairing between the unit and the subwoofer gets disconnected. Connect the unit and the subwoofer. (Refer to the page 12.)
The remote control does not work properly.	• The remote control is too far from the unit. Operate the remote control within about 7 m. • There is an obstacle in the path of the remote control and the unit. Remove the obstacle. • The batteries in the remote control is exhausted. Replace the batteries with new one.
The AUTO POWER function does not work.	• Check connection of the external device such as TV, DVD/Blu-Ray player or **Bluetooth** device. • Check the state of SIMPLINK and turn off SIMPLINK. • Depending on the connected device, this function may not operate.
LG Sound Sync does not work.	• Check whether your LG TV supports LG Sound Sync. • Check connection of LG Sound Sync (Optical or wireless). • Check sound setting of your TV and this unit.

PROBLEM	CAUSE & CORRECTION
When you feel the output sound of the unit is low.	Check the details below and adjust the unit according to them. • With the sound bar connected with TV, change the AUDIO DIGITAL OUT setting on TV Setup Menu from [PCM] to [AUTO] or [BITSTREAM]. • With the sound bar connected with Player, change the AUDIO DIGITAL OUT setting on Player Setup Menu from [PCM] to [PRIMARY PASS-THROUGH] or [BITSTREAM]. • Change Audio DRC setting on Player setup menu to [OFF] state.

Trademarks and licenses

All other trademarks are trademarks of their respective owners.

Manufactured under license from Dolby Laboratories. Dolby and the double-D symbol are trademarks of Dolby Laboratories.

For DTS patents, see http://patents.dts.com. Manufactured under license from DTS Licensing Limited. DTS, the Symbol, & DTS and the Symbol together are registered trademarks, and DTS Digital Surround is a trademark of DTS, Inc. © DTS, Inc. All Rights Reserved.

Bluetooth® wireless technology is a system which allows radio contact between electronic.

Connecting individual devices under ***Bluetooth®*** wireless technology does not incur any charges. A mobile phone with ***Bluetooth®*** wireless technology can be operated via the Cascade if the connection was made via ***Bluetooth®*** wireless technology.

The ***Bluetooth®*** word mark and logos are owned by the ***Bluetooth®*** SIG, Inc. and any use of such marks by LG Electronics is under license.

Other trademarks and trade names are those of their respective owners.

The terms HDMI and HDMI High-Definition Multimedia Interface, and the HDMI logo are trademarks or registered trademarks of HDMI Licensing LLC in the United States and other countries.

Specifications

General (LAS450H)	
Power requirements	Refer to the main label.
Power consumption	Refer to the main label.
Dimensions (W x H x D)	890 mm X 55 mm X 89 mm
Net Weight (Approx.)	2.72 kg
Operating temperature	41 °F to 95 °F (5 °C to 35 °C)
Operating humidity	5 % to 90 %

Input/Output	
OPT. IN	3 V (p-p), Optical jack x 1
PORT. IN	0.5 Vrms (3.5 mm stereo jack) x 1
HDMI IN	19 Pin (Type A, HDMI™ connector) x 1
HDMI OUT	19 Pin (Type A, HDMI™ connector) x 1
Available Digital Input Audio Sampling Frequency	32 kHz, 44.1 kHz, 48 kHz, 96 kHz

USB	
Version	2.0
Bus Power Supply	5 V ⎓ 500 mA

Amplifier	
Total	300 W
Front Middle/ Tweeter	40 W x 2 (4 Ω at 1 kHz) / 15 W x 2 (8 Ω at 12 kHz)
Subwoofer	200 W (6 Ω at 80 Hz)
THD	10 %

Wireless subwoofer (S55A1-D)	
Power requirements	Refer to the main label on the subwoofer.
Power consumption	Refer to the main label on the subwoofer.
Type	1 Way 1 Speaker
Impedance	3 Ω
Rated Input Power	190W
Max. Input Power	380 W
Dimensions (W x H x D)	171 mm x 390 mm x 261mm
Net Weight (Approx.)	5.6 kg

Bluetooth	
Codec	SBC

- Designs and specifications are subject to change without prior notice.

Maintenance

Handling the unit

When shipping the unit

Please save the original shipping carton and packing materials. If you need to ship the unit, for maximum protection, re-pack the unit as it was originally packed at the factory.

Keeping the exterior surfaces clean

- Do not use volatile liquids such as insecticide spray near the unit.
- Wiping with strong pressure may damage the surface.
- Do not leave rubber or plastic products in contact with the unit for a long period of time.

Cleaning the unit

To clean the player, use a soft, dry cloth. If the surfaces are extremely dirty, use a soft cloth lightly moistened with a mild detergent solution. Do not use strong solvents such as alcohol, benzine, or thinner, as these might damage the surface of the unit.

Technology with the human touch

GUARANTEE

- LG Electronics U.K. Ltd. will provide the following services in order to expedite this Guarantee.

1. All faulty components which fail due to defective manufacture will be replaced free of charge for a period of 12 months from the original date of purchase.
2. The dealer (or his service agent) who sold the product will be reimbursed for any labour provided in the repair of this LG equipment, for a period of 12 months from the original date of purchase. These claims must be made in accordance with the published scale of service charges and relevant claims procedure.

PLEASE NOTE:

A. The dealer may restrict the guarantee to the original purchaser.

B. The dealer is not obliged to carry out service under guarantee if unauthorized modifications are made to the apparatus, or if non standard components are used or if the serial number of the apparatus is removed, defaced, misused, or altered.

C. Any claims made under guarantee must be directed to the dealer from whom the equipment was originally purchased. The dealer may, before carrying out service under guarantee, require a receipted account as evidence of the date of purchase.

D. We respectfully point out that your dealer is not obligated to replace batteries if they become exhausted or worn in use.

E. Aerial alignment and consumer control adjustments are not covered by this guarantee.

This guarantee does not affect your statutory rights.

- REQUIREMENTS TO MAINTAIN WARRANTY COVERAGE:
  RETAIN YOUR RECEIPT TO PROVE DATE OF PURCHASE. A COPY OF YOUR RECEIPT MUST BE SURRENDERED AT THE TIME GUARANTEE SERVICE IS PROVED.
- Product Registration Card :
  It is helpful to complete at least your name, address, phone, model & serial numbers and return it. This will enable LG to assist you in the future should you lose your receipt, your units be stolen, or should modifications be necessary.
- To obtain information or assistance:
  Call UK: 0344 847 5454 IE: 01 686 9454

MODEL NO.*	SERIAL NO.*	DATE OF PURCHASE.*

In all cases of difficulty - consult your LG dealer from whom the product was purchased
LGEUK Website : www.lg.com/uk
(Service website : www.lg.com/uk/support)

LG

Life's Good