LG
Life's Good

MFL71950463221 2REV00

OLED55C3*
OLED65C3*
OLED77C3*

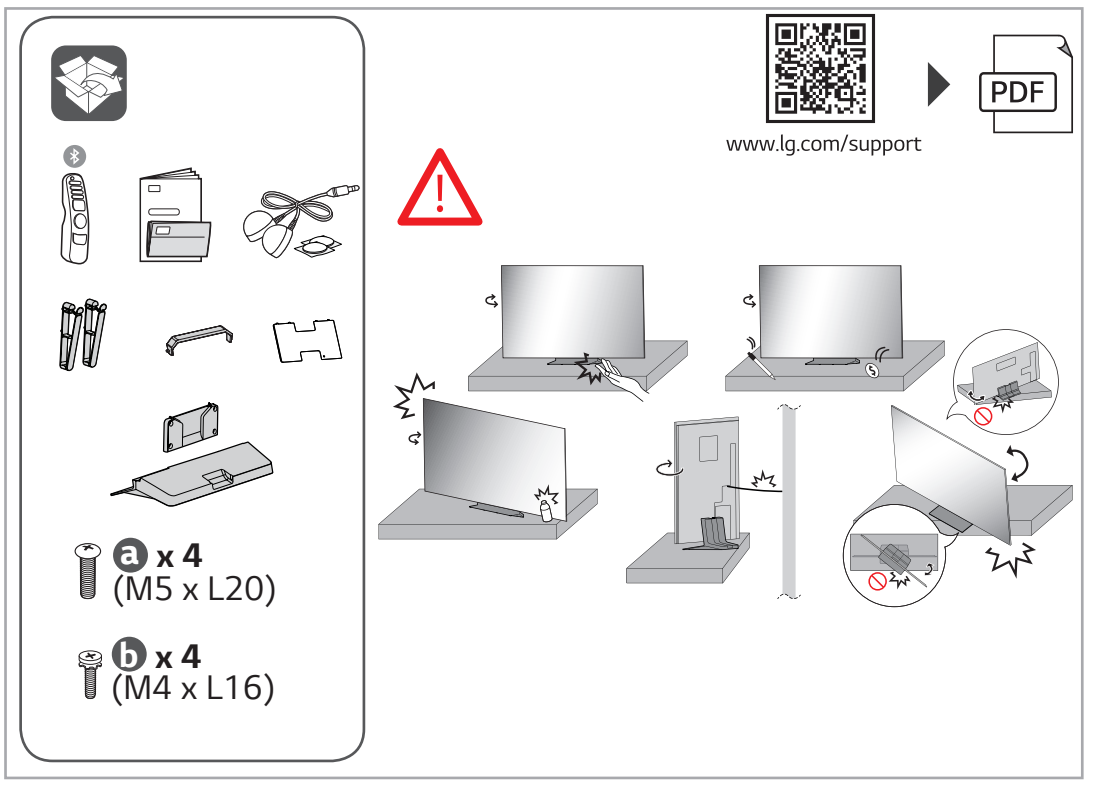

1-1

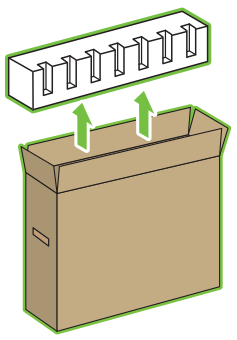

1-2

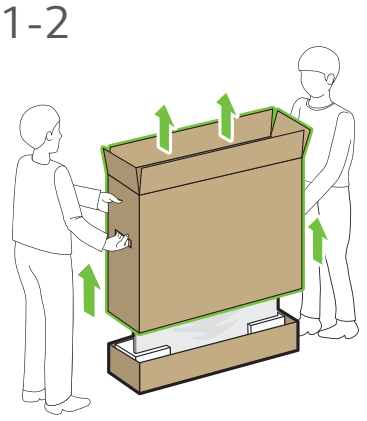

2

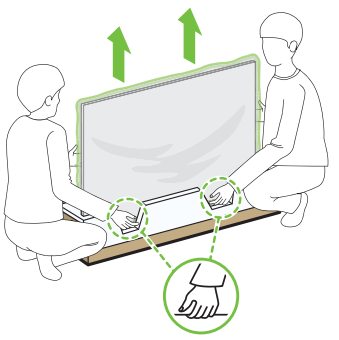

3

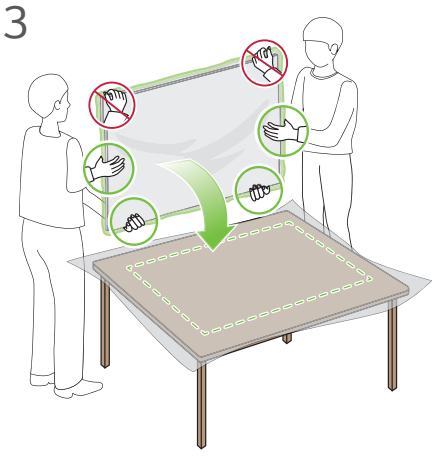

4

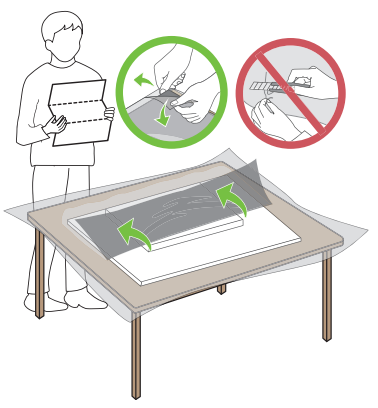

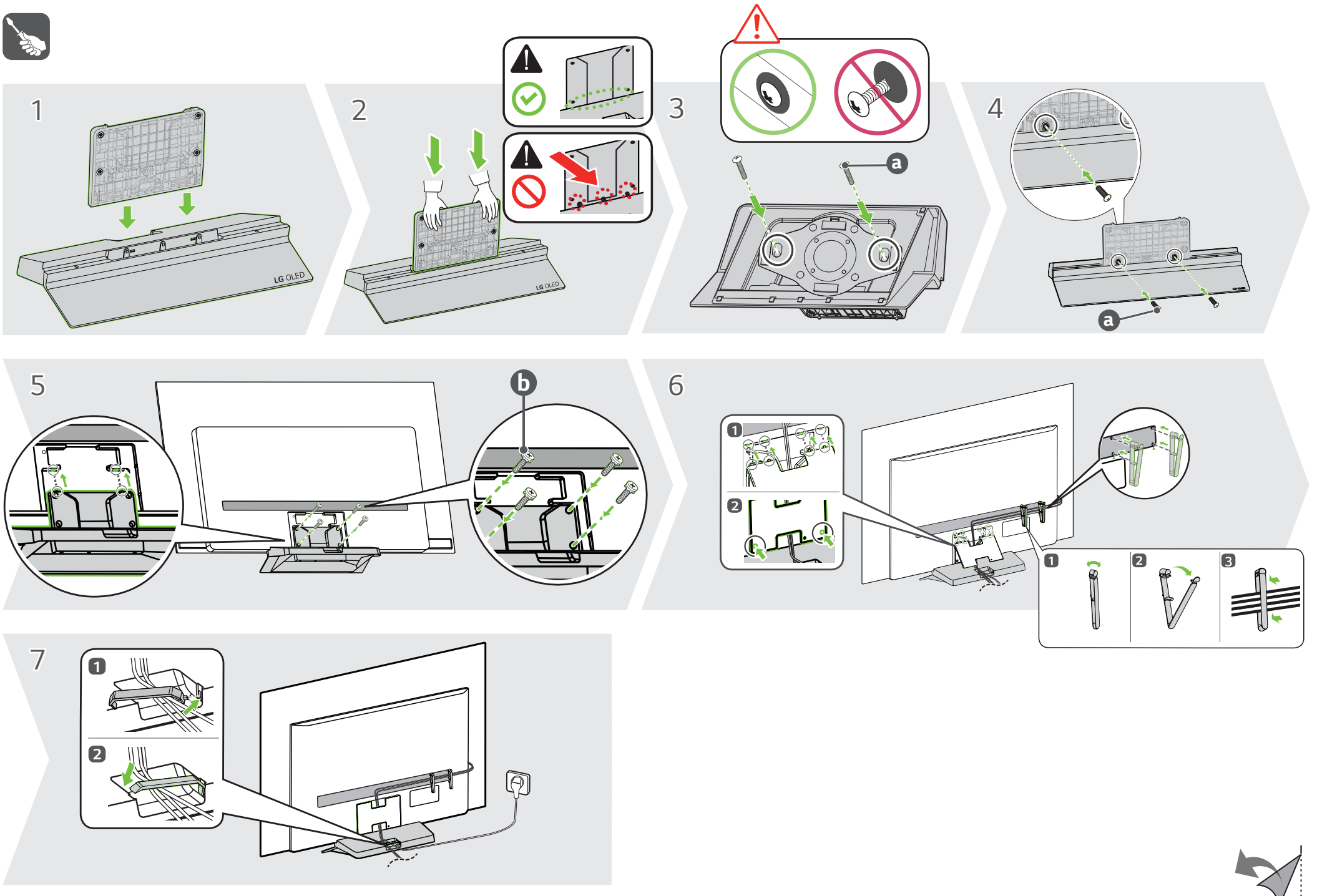

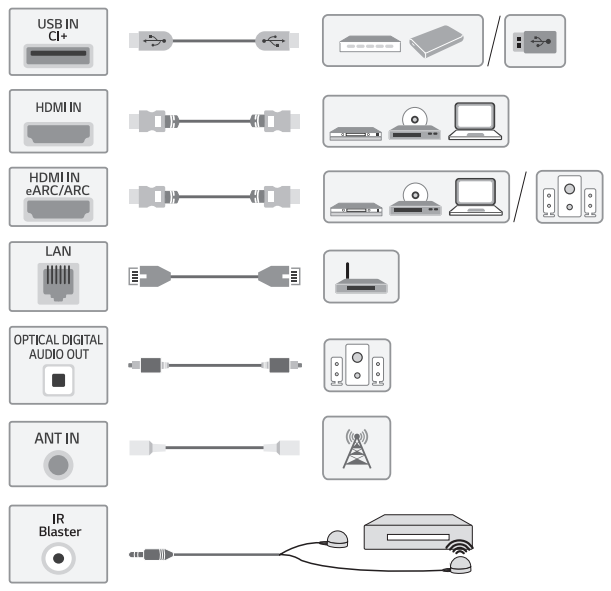

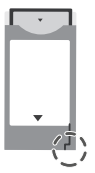

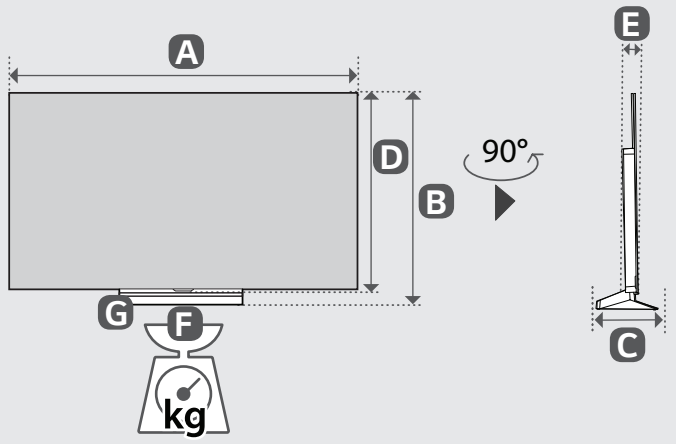

	A	B	C	D	E	F	F - G
	(mm)					(kg)	
OLED55C36LC OLED55C39LC OLED55C3RLD	1222	757	230	703	45.1	17.5	14.1
OLED65C36LC OLED65C39LC OLED65C3RLD	1441	880	230	826	45.1	20.0	16.6
OLED77C36LC OLED77C39LC	1711	1035	267	982	47.1	29.2	23.5

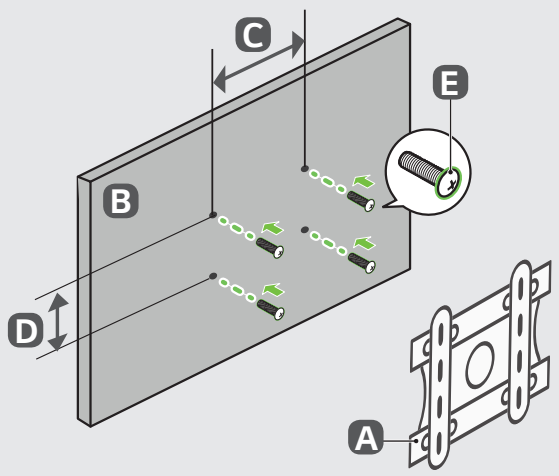
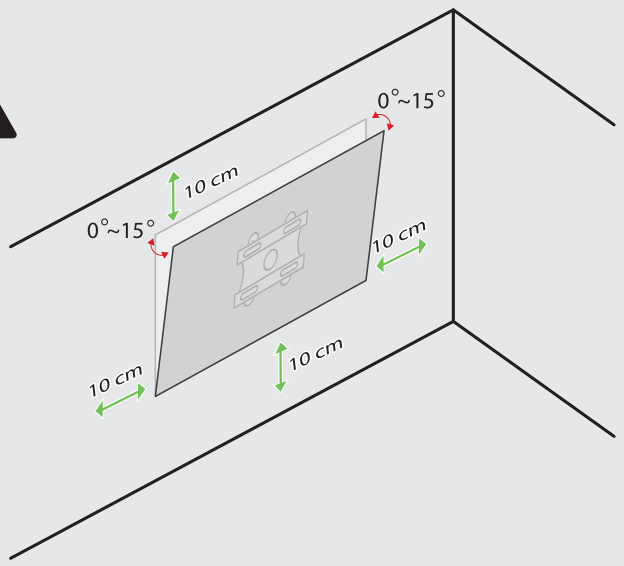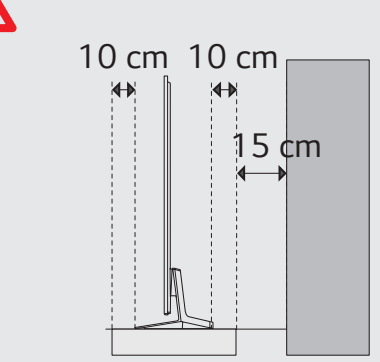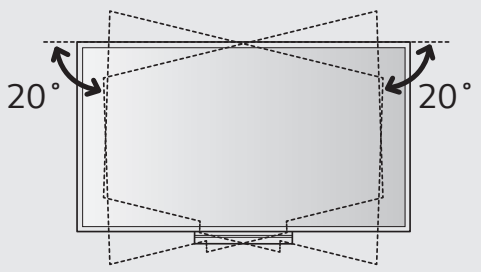
A	B	C x D (mm)	E
OLW480B	OLED55/65/77C3*	300 x 200	M6