ENGLISH

РУССКИЙ ЯЗЫК

INSTALLATION MANUAL

AIR CONDITIONER

Please read this installation manual completely before installing the product.
Installation work must be performed in accordance with the national wiring standards by authorized personnel only.
Please retain this installation manual for future reference after reading it thoroughly.

ART COOL
Original instruction

P/NO : MFL69480710

001

www.lg.com

TIPS FOR SAVING ENERGY

Here are some tips that will help you minimize the power consumption when you use the air conditioner. You can use your air conditioner more efficiently by referring to the instructions below:

- Do not cool excessively indoors. This may be harmful for your health and may consume more electricity.
- Block sunlight with blinds or curtains while you are operating the air conditioner.
- Keep doors or windows closed tightly while you are operating the air conditioner.
- Adjust the direction of the air flow vertically or horizontally to circulate indoor air.
- Speed up the fan to cool or warm indoor air quickly, in a short period of time.
- Open windows regularly for ventilation as the indoor air quality may deteriorate if the air conditioner is used for many hours.
- Clean the air filter once every 2 weeks. Dust and impurities collected in the air filter may block the air flow or weaken the cooling / dehumidifying functions.

For your records

Staple your receipt to this page in case you need it to prove the date of purchase or for warranty purposes. Write the model number and the serial number here:

Model number :

Serial number :

You can find them on a label on the side of each unit.

Dealer's name :

Date of purchase :

IMPORTANT SAFETY INSTRUCTIONS

READ ALL INSTRUCTIONS BEFORE USING THE APPLIANCE.

Always comply with the following precautions to avoid dangerous situations and ensure peak performance of your product

⚠ WARNING

It can result in serious injury or death when the directions are ignored

⚠ CAUTION

It can result in minor injury or product damage when the directions are ignored

⚠ WARNING

- Installation or repairs made by unqualified persons can result in hazards to you and others.
- Installation MUST conform with local building codes.
- The information contained in the manual is intended for use by a qualified service technician familiar with safety procedures and equipped with the proper tools and test instruments.
- Failure to carefully read and follow all instructions in this manual can result in equipment malfunction, property damage, personal injury and/or death.

Installation

- Don't use a power cord, a plug or a loose socket which is damaged.
  - Otherwise, it may cause a fire or electrical shock.
- For electrical work, contact the dealer, seller, a qualified electrician, or an Authorized Service Center.
  - Do not disassemble or repair the product. There is risk of fire or electric shock.
- Always ground the product.
  - There is risk of fire or electric shock.
- Install the panel and the cover of control box securely.
  - There is risk of fire or electric shock.
- Always install a dedicated circuit and breaker.
  - Improper wiring or installation may cause fire or electric shock.
- Use the correctly rated breaker or fuse.
  - There is risk of fire or electric shock.
- Do not modify or extend the power cable.
  - There is risk of fire or electric shock.
- Do not let the air conditioner run for a long time when the humidity is very high and a door or a window is left open.
  - Moisture may condense and wet or damage furniture.
- Be cautious when unpacking and installing the product.
  - Sharp edges could cause injury. Be especially careful of the case edges and the fins on the condenser and evaporator.
- For installation, always contact the dealer or an Authorized Service Center.
  - There is risk of fire, electric shock, explosion, or injury.

- Do not install the product on a defective installation stand.
  - It may cause injury, accident, or damage to the product.
- Be sure the installation area does not deteriorate with age.
  - If the base collapses, the air conditioner could fall with it, causing property damage, product failure, and personal injury.
- There is a risk of fire and explosion.
  - Inert gas (nitrogen) should be used when you check plumbing leaks, cleaning or repairs of pipes etc.
    If you are using combustible gases including oxygen, product may have the risk of fires and explosions.
- Use a vacuum pump or Inert (nitrogen) gas when doing leakage test or air purge. Do not compress air or Oxygen and do not use Flammable gases. Otherwise, it may cause fire or explosion.
  - There is the risk of death, injury, fire or explosion.

Operation

- Do not store or use flammable gas or combustibles near the product.
  - There is risk of fire or failure of product.

⚠ CAUTION

Installation

- Always check for gas (refrigerant) leakage after installation or repair of product.
  - Low refrigerant levels may cause failure of product.
- Install the drain hose to ensure that water is drained away properly.
  - A bad connection may cause water leakage.
- Keep level even when installing the product.
  - To avoid vibration or water leakage.
- Use two or more people to lift and transport the product.
  - Avoid personal injury.

TABLE OF CONTENTS

3 IMPORTANT SAFETY INSTRUCTIONS

6 INSTALLATION PARTS

6 INSTALLATION TOOLS

7 INSTALLATION MAP

8 INSTALLATION

8 Select the best Location
8 Fixing Installation Plate
9 Drill a Hole in the Wall
9 Flaring Work
9 - Cut the pipes and the cable
9 - Burrs removal
9 - Putting nut on
9 - Flaring work
10 - Check
10 Connecting the Piping
10 - Good case
11 - Bad case
11 - Installation of Indoor Unit
11 - Piping
12 - Connecting the installation pipe and drain hose to the indoor unit.
13 - Wrap the insulation material around the connecting portion.
13 - Finishing the indoor unit installation
14 Checking the Drainage
14 - To check the drainage.
14 - Drain piping
15 Installation of filters
16 Wiring Connection
17 DIP Switch Setting
18 Group control setting
18 - Group control 1
19 - Group control 2
20 - Group control 3
21 - Remote control
22 - Accessories for group control setting
23 Model Designation
23 Airborne Noise Emission
23 Limiting concentration

INSTALLATION PARTS

Name	Quantity	Shape
Installation plate	1 EA	 The feature can be changed according to type of model.
Type "A" screw	5 EA	
Type "C" screw	2 EA	

Screws for fixing panels are attached to decoration panel.

INSTALLATION TOOLS

Figure	Name	Figure	Name
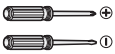	Screw driver		Multi-meter
	Electric drill		Hexagonal wrench
	Measuring tape, Knife	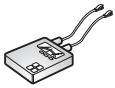	Ammeter
	Hole core drill		Gas-leak detector
	Spanner	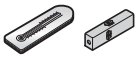	Thermometer, Level
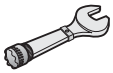	Torque wrench		Flaring tool set

INSTALLATION MAP

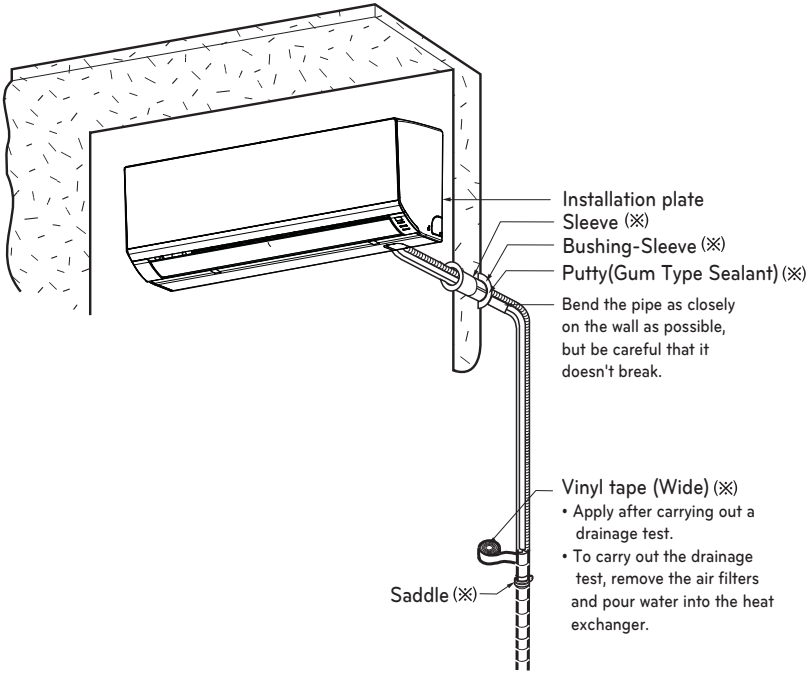

* The feature can be changed according to type of model.

NOTE

• You should purchase the installation parts.

INSTALLATION

Select the best Location

- There should not be any heat or steam near the unit.
- Select a place where there are no obstacles around of the unit.
- Make sure that condensation drainage can be conveniently routed away.
- Do not install near a doorway.
- Ensure that the interval between a wall and the left (or right) of the unit is more than 100 mm. The unit should be installed as high as possible on the wall, allowing a minimum of 200 mm from ceiling.
- Use a metal detector to locate studs to prevent unnecessary damage to the wall.

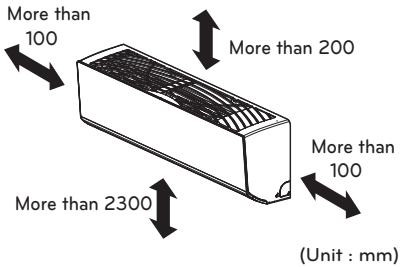

* The feature can be changed according to type of model.

CAUTION

Install the indoor unit on the wall where the height from the floor is more than 2300 mm.

Fixing Installation Plate

The wall you select should be strong and solid enough to prevent vibration

1 Mount the installation plate on the wall with type "A" screws. If mounting the unit on a concrete wall, use anchor bolts.
   - Mount the installation plate horizontally by aligning the centerline using Horizontal meter .

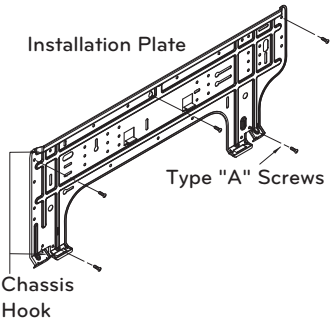

2 Measure the wall and mark the centerline. It is also important to use caution concerning the location of the installation plate. Routing of the wiring to power outlets is through the walls typically. Drilling the hole through the wall for piping connections must be done safely.

SB chassis

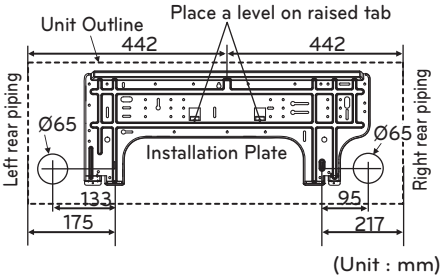

SC chassis

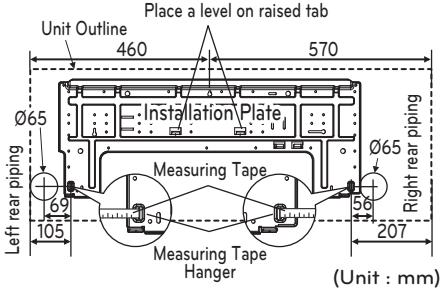

Drill a Hole in the Wall

- Drill the piping hole with a ø65 mm hole core drill. Drill the piping hole at either the right or the left with the hole slightly slanted to the outdoor side.

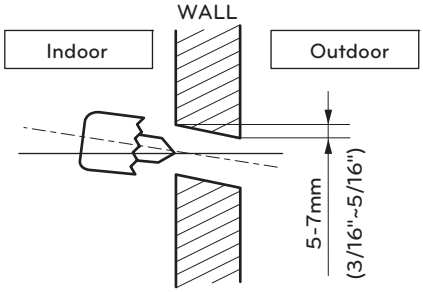

Flaring Work

Main cause for gas leakage is due to defect of flaring work. Carry out correct flaring work in the following procedure.

Cut the pipes and the cable

1 Use the piping kit accessory or the pipes purchased locally.
2 Measure the distance between the indoor and the outdoor unit.
3 Cut the pipes a little longer than measured distance.
4 Cut the cable 1.5m longer than the pipe length.

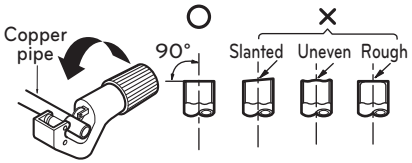

Burrs removal

1. Completely remove all burrs from the cut cross section of pipe/tube.
2. While removing burrs put the end of the copper tube/pipe in a downward direction while removing burrs location is also changed in order to avoid dropping burrs into the tubing.

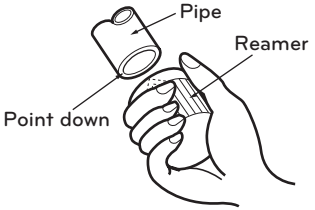

Putting nut on

- Remove flare nuts attached to indoor and outdoor unit, then put them on pipe/tube having completed burr removal.
  (not possible to put them on after finishing flare work)

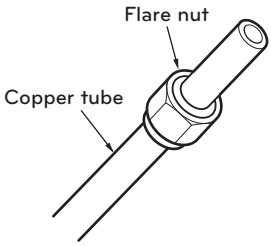

Flaring work

1 Firmly hold copper pipe in a bar with the dimension shown in below table table below.
2 Carry out flaring work with the flaring tool.

Outside diameter		A
mm	inch	mm
Ø6.35	1/4	1.1~1.3
Ø9.52	3/8	1.5~1.7
Ø12.7	1/2	1.6~1.8
Ø15.88	5/8	1.6~1.8
Ø19.05	3/4	1.9~2.1

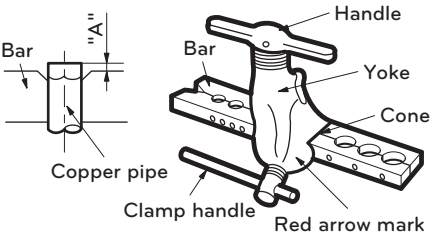

Check

1 Compare the flared work with the figure by.

2 If a flared section is defective, cut it off and do flaring work again.

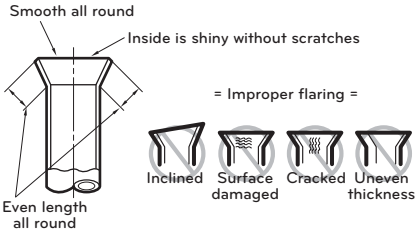

Connecting the Piping

1 Pull the screw cap at the bottom of the indoor unit

2 Remove the chassis cover from the unit by loosing 2 screws

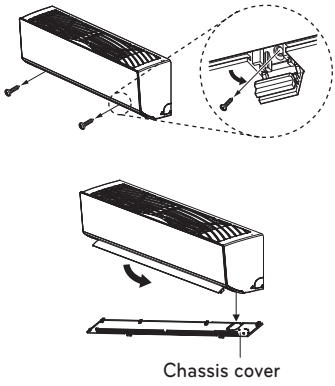

3 Pull back the tubing holder.

4 Remove pipe port cover and positioning the tubing

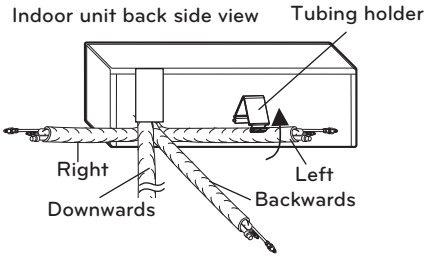

* The feature can be changed according to type of model.

Good case

- Press on the tubing cover and unfold the tubing to downward slowly. And then bend to the left side slowly.

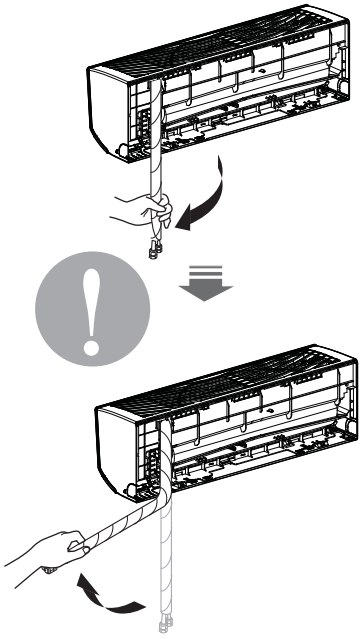

Bad case

- Following bending case from right to left directly may cause damage to the tubing.

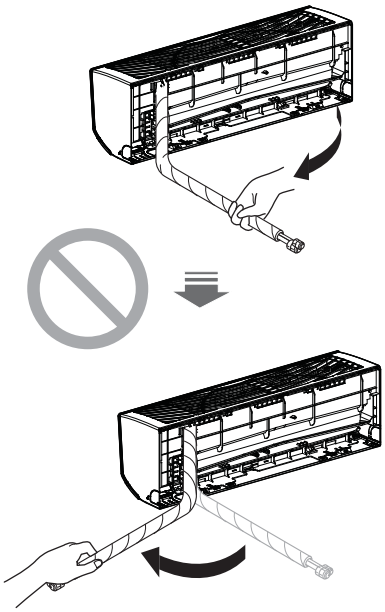

* The feature can be changed according to type of model.

> ⚠ CAUTION
>
> Installation Information. For right piping. Follow the instruction above.

Installation of Indoor Unit

1 Hook the indoor unit onto the upper portion of the installation plate.(engage the three hooks at the top of the indoor unit with the upper edge of the installation plate) Ensure that the hooks are properly seated on the installation plate by moving it left and right

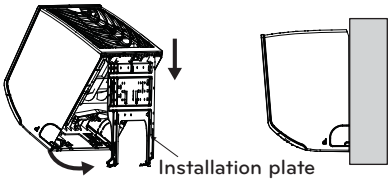

2 Unlock the tubing holder from the chassis and mount between the chassis and installation plate in order to separate the bottom side of the indoor unit from the wall.

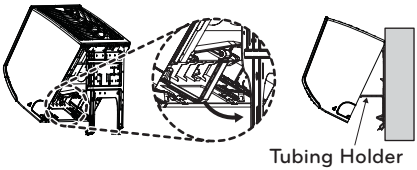

* The feature can be changed according to type of model.

Piping

1 Insert the connecting cable through the bottom side of indoor unit and connect the cable (You can see detail contents in 'Connecting the cables' section)

<Left side piping>

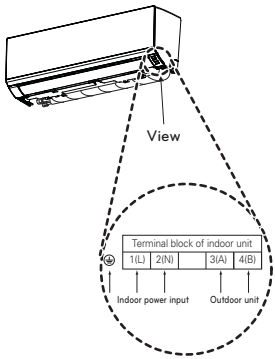

<Right side piping>

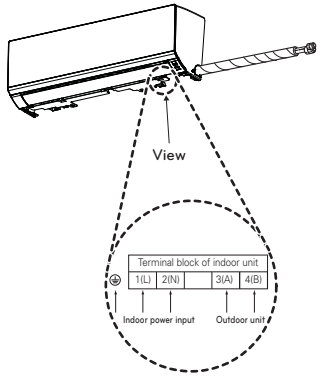

2 Secure the cable onto the control board with the cable retainer.

3 Tape the tubing pipe, drain hose and the connection cable. Be sure that the drain hose is located at the lowest side of the bundle. Locating at the upper side can cause overflow from the drain pan through the inside of the unit.

<Left side piping>

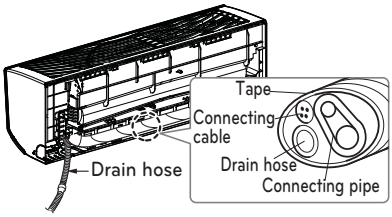

<Right side piping>

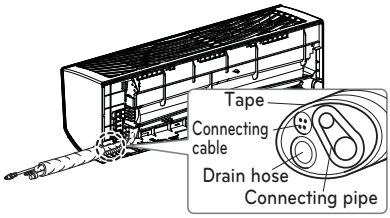

* The feature can be changed according to type of model.

CAUTION

If the drain hose is routed inside the room insulate the hose with an insulation material* so that dripping from sweating condensation) will not damage furniture or floors.

* Foamed polyethylene or equivalent is recommended.

Connecting the installation pipe and drain hose to the indoor unit.

1 Align the center of the pipes and sufficiently tighten the flare nut by hand

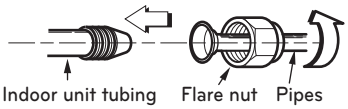

2 Tighten the flare nut with a wrench

Outside diameter		Torque
mm	inch	kgf.m
Ø6.35	1/4	1.8~2.5
Ø9.52	3/8	3.4~4.2
Ø12.7	1/2	5.5~6.5
Ø15.88	5/8	6.3~8.2
Ø19.05	3/4	9.9~12.1

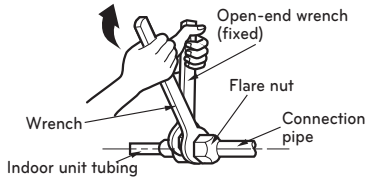

3 When needed to extend the drain hose of indoor unit, assembly the drain pipe as shown on the drawing

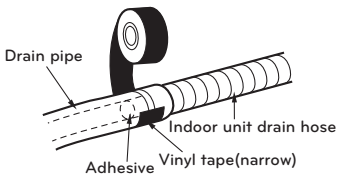

Wrap the insulation material around the connecting portion.

1 Overlap the connection pipe insulation material and the indoor unit pipe insulation material. Bind them together with vinyl tape so that there may be no gap.

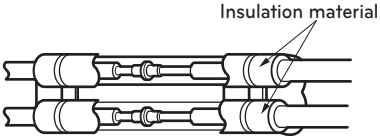

2 Set the tubing cutting line upward.
Wrap the area which accommodates the rear piping housing section with vinyl tape.

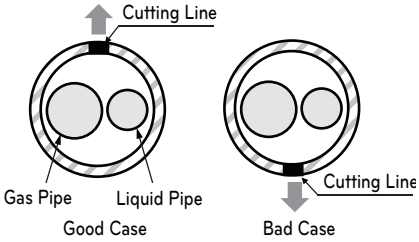

* Tubing cutting line have to be upward.



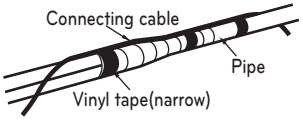

3 Bundle the piping and drain hose together by wrapping them with vinyl tape sufficient enough to cover where they fit into the rear piping housing section.

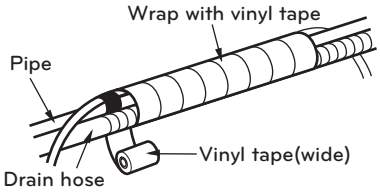

Finishing the indoor unit installation

1 Mount the tubing holder in the original positon.

2 Ensure that the hooks are properly seated on the installation plate by moving it left and right.

3 Press the lower left and right sides of the unit against the installation plate until the hooks engage into their slots (clicking sound).

4 Finish the assembly by screwing the unit to the installation plate by using two pieces of type "C" screws. And assemble a chassis cover.

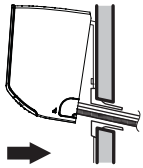

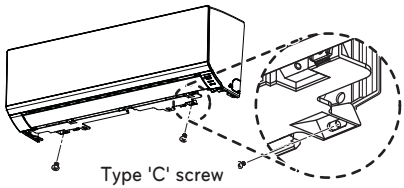

Checking the Drainage

To check the drainage.

1 Pour a glass of water on the evaporator.

2 Ensure the water flows through the drain hose of the indoor unit without any leakage and goes out the drain exit.

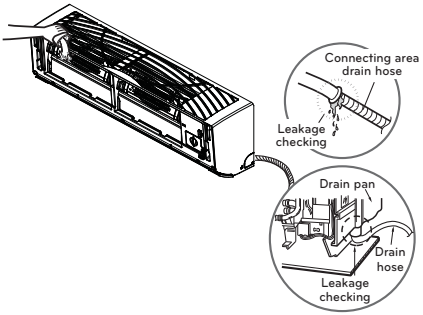

Drain piping

1 The drain hose should point downward for easy drain flow.

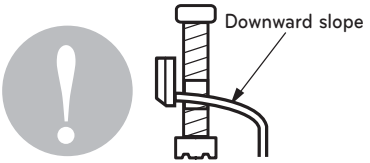

2 Do not make drain piping like the following.

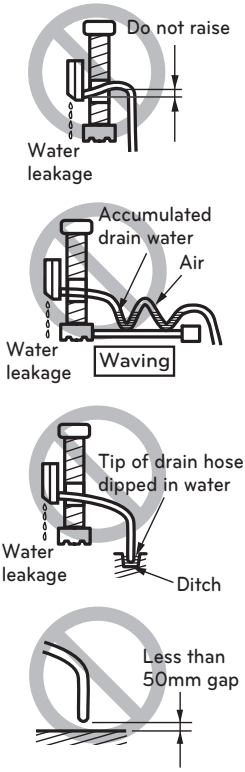

* The feature can be changed according to type of model.

Installation of filters

1 Pull out the [Allergy free filter + Triple Filter] from the separately packed plastic bag.
2 Detach the two nitto tapes from the filter.
3 Insert the filter into the filter case.
4 Detach two nitto tapes from the plasma filter.

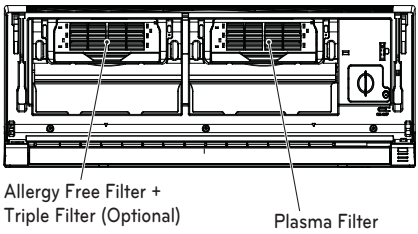

Wiring Connection

- Connect the wires to the terminals on the control board individually according to the outdoor unit connection.
- Ensure that the color of the wires of outdoor unit and the terminal No. are the same as those of indoor unit respectively.

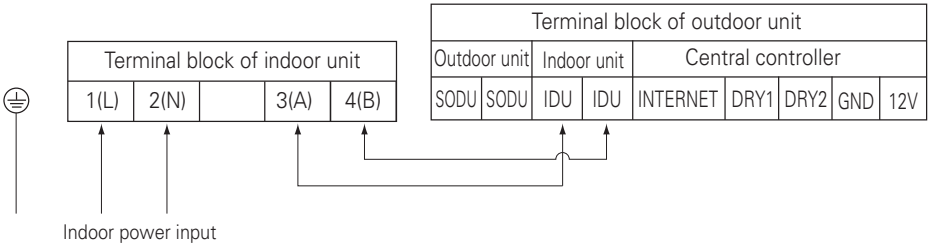

WARNING

Make sure that the screws of the terminal are free from looseness.

CAUTION

The Power cord connected to the unit should be selected according to the following specifications.

CAUTION

After the confirmation of the above conditions, prepare the wiring as follows:

1) Never fail to have separate power specially for the air conditioner. As for the method of wiring, follow the circuit diagram pasted on the inside of control box cover.
2) Provide a circuit breaker switch between power source and the unit.
3) The screw which fasten the wiring in the casing of electrical fittings are liable to come loose from vibrations to which the unit is subjected during the course of transportation. Check them and make sure that they are all tightly fastened. (If they are loose, it could give rise to burn-out of the wires.)
4) Confirm the Specification of power source
5) Confirm that electrical capacity is sufficient.
6) Be sure that the starting voltage is maintained at more than 90 percent of the rated voltage marked on the name plate.
7) Confirm that the cable thickness is as specified in the power sources specification. (Particularly note the relation between cable length and thickness.)
8) Do not install the leakage breaker in a place which is wet or moist. Water or moist may cause short circuit.
9) The following troubles would be caused by voltage drop-down.
   - Vibration of a magnetic switch, damage on the contact point there of, fuse breaking, disturbance to the normal function of a overload protection device.
   - Proper starting power is not given to the compressor.

DIP Switch Setting

Indoor Unit

	Function	Description	Setting Off	Setting On	Default
SW1	Communication	N/A (Default)	-	-	Off
SW2	Cycle	N/A (Default)	-	-	Off
SW3	Group Control	Selection of Master or Slave	Master	Slave	Off
SW4	Dry Contact Mode	Selection of Dry Contact Mode	Wired/Wireless remote controller Selection of Manual or Auto operation Mode	Auto	Off
SW5	Installation	Fan continuous operation	Continuous operation Removall	-	Off
SW6	Heater linkage	N/A	-	-	Off
SW7	Ventilator linkage	Selection of Ventilator linkage	Linkage Removal	Working	Off
	Vane selection (Console)	Selection of up/down side Vane	Up side + Down side Vane	Up side Vane Only	
	Region selection	Selection tropical region	General model	Tropical model	
SW8	Etc.	Spare	-	-	Off

CAUTION

For Multi V Models, DIP switch 1, 2, 6, 8 must be set OFF.

Outdoor Unit

In case that the products meet specific conditions, "Auto addressing" function can start automatically with the improved speed by turning the DIP switch #3 of the outdoor unit and resetting the power.

* Specific conditions:
  - All names of the indoor units are ARNU****4
  - The serial number of Multi V super IV (outdoor units) is after October 2013,

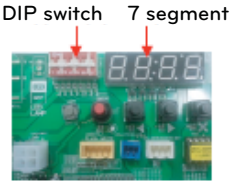

Outdoor Unit PCB

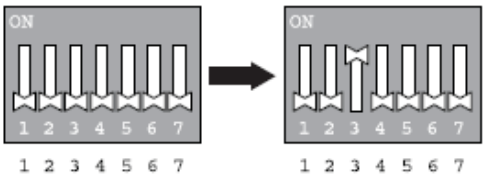

Outdoor Unit DIP Switch

Group Control Setting

Group Control 1

■ Wired remote controller 1 + Standard Indoor Units

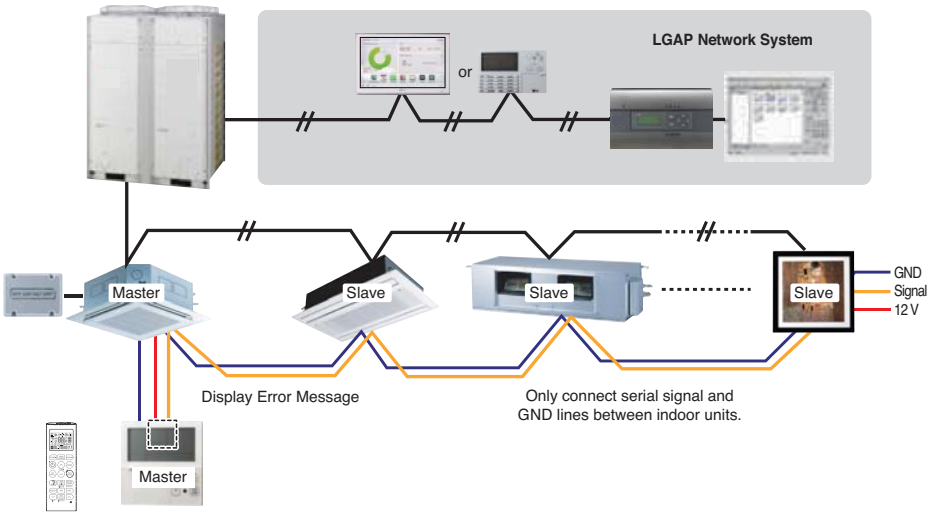

■ DIP Switch in PCB

① Master Setting
- No. 3 Off

② Slave Setting
- No. 3 On

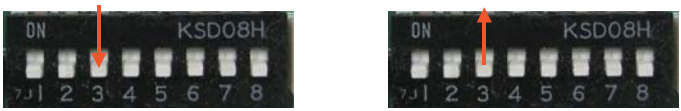

Outdoor Unit DIP Switch

Some products have no DIP switch on PCB. It is possible to set indoor units to Master or Slave by using the wireless remote controller instead of DIP switch.

For the details of the setting, please refer to the manual of the wireless remote controller.

1. It is possible to 16 indoor units(Max.) by one wired remote controller.
   Set only one indoor unit to Master, set the others to Slave.
2. It is possible to connect with every type of indoor units.
3. It is possible to use wireless remote controller at the same time.
4. It is possible to connect with Dry Contact and Central controller at the same time.
   - The Master indoor unit is possible to recognize Dry Contact and Central Controller only.
5. In case that any error occurs at indoor unit, the error code is displayed on the wired remote controller.
   It is possible to control the other indoor units except the error units.

* It is possible to connect indoor units since Feb. 2009.
* It can be the cause of malfuctions when there is no setting of master and slave.
* In case of Group Control, it is possible to use following functions.
  - Selection of operation, stop or mode
  - Temperature setting and room temperature check
  - Current time change
  - Control of flow rate (High/Middle/Low)
  - Reservation settings
  - It is not possible at some functions.

Group Control 2

■ Wired remote controllers + Standard Indoor Units

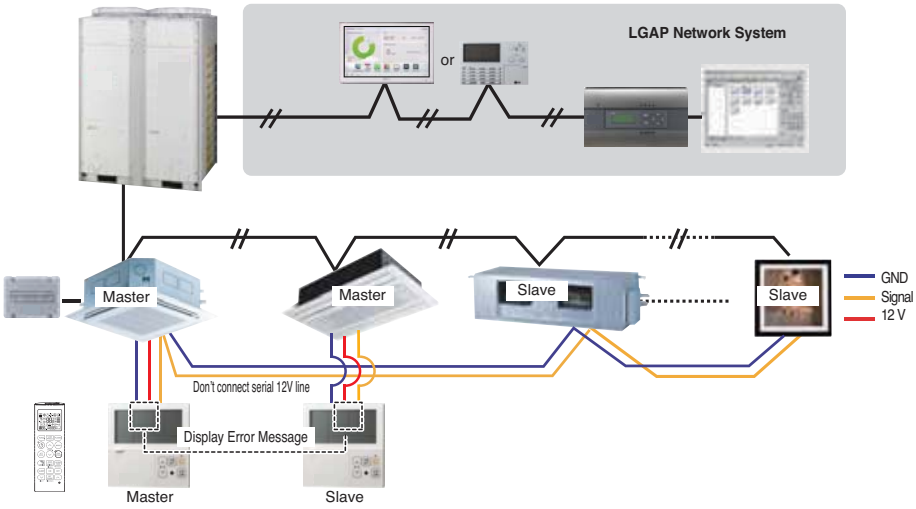

* It is possible to control 16 indoor units(Max.) with the master wired remote control.
* Other than those, it is same with the Group Control 1.

Group Control 3

■ Mixture connection with indoor units and Fresh Air Intake Unit

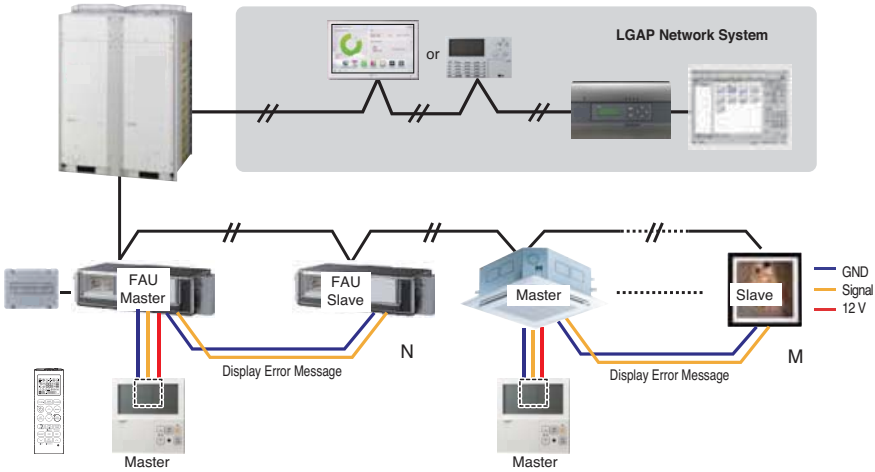

* In case of connecting with standard indoor unit and Fresh Air Intake Unit, separate Fresh Air Intake Unit with standard units. (N, M ≤ 16) (Because setting temperature are different.)

* Other than those, it is same with Group Control 1.



* FAU : Fresh Air Intake Unit
Standard: Standard Indoor Unit

2 Remote Control

■ Wired remote controller 2 + Indoor unit 1

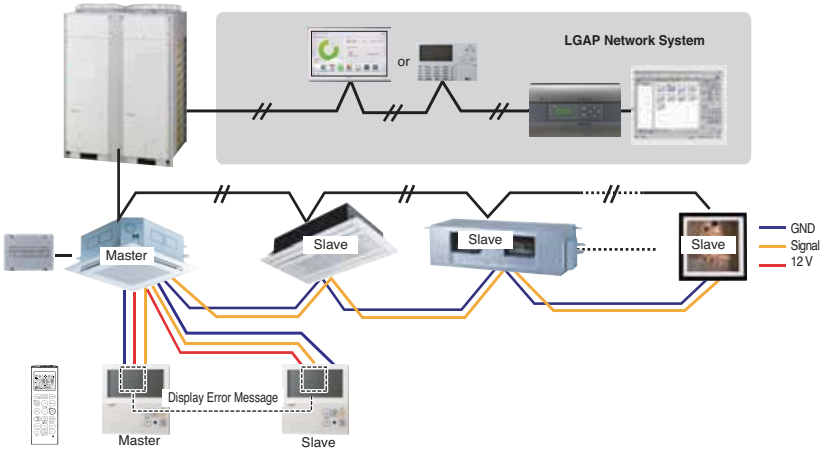

1. It is possible to connect two wired remote controllers (Max.) with one indoor unit.
   Set only one indoor unit to Master, set the others to Slave.
   Set only one wired remote controller to Master, set the others to Slave.
2. Every types of indoor unit is possible to connect two remote controller.
3. It is possible to use wireless remote controller at the same time.
4. It is possible to connect with Dry Contact and Central controller at the same time.
5. In case that any error occurs at indoor unit, the error code is displayed on the wired remote controller.
6. There isn't limits of indoor unit function.

Accessories for group control setting

It is possible to set group control by using below accessories.

Indoor unit 2 EA +Wired remote controller	Indoor unit 1 EA +Wired remote controller 2EA
* PZCWRCG3 cable used for connection 	* PZCWRC2 cable used for connection 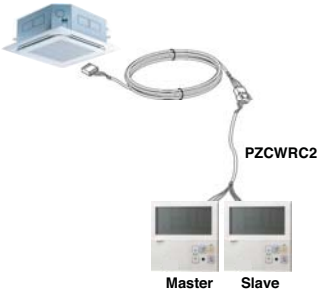

⚠ CAUTION

Apply totally enclosed noncombustible conduit in case of local building code Requiring plenum cable usage.

Model Designation

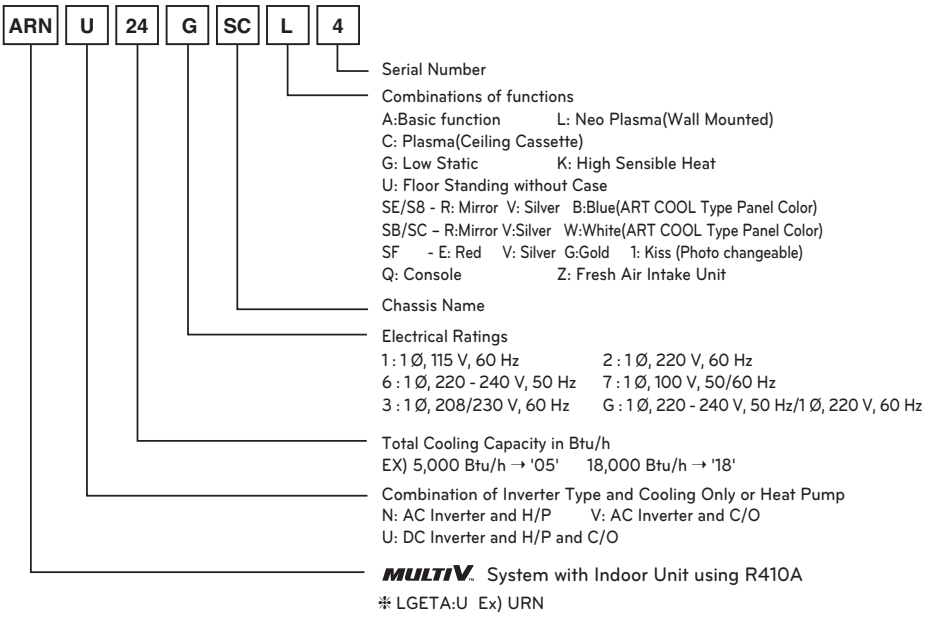

Airborne Noise Emission

The A-weighted sound pressure emitted by this product is below 70 dB.

** The noise level can vary depending on the site.

The figures quoted are emission level and are not necessarily safe working levels. Whilst there is a correlation between the emission and exposure levels, this cannot be used reliably to determine whether or not further precautions are required. Factor that influence the actual level of exposure of the workforce include the characteristics of the work room and the other sources of noise, i.e. the number of equipment and other adjacent processes and the length of time for which an operator exposed to the noise. Also, the permissible exposure level can vary from country to country. This information, however, will enable the user of the equipment to make a better evaluation of the hazard and risk.

Limiting concentration

Limiting concentration is the limit of Freon gas concentration where immediate measures can be taken without hurting human body when refrigerant leaks in the air. The limiting concentration shall be described in the unit of kg/m^3 (Freon gas weight per unit air volume) for facilitating calculation

Limiting concentration: 0.44 kg/m^3(R410A)

■ Calculate refrigerant concentration

$$\text{Refrigerant concentration} = \frac{\text{Total amount of replenished refrigerant in refrigerant facility (kg)}}{\text{Capacity of smallest room where indoor unit is installed (m}^3\text{)}}$$



[Производитель] LG Electronics Inc, Республика Корея,
Кёнгсангнам, Чангвон, Сёнгсан, Ванам-ро, 84, завод Чангвон №2

[Manufacturer] LG Electronics Inc. Changwon 2nd factory
84, Wanam-ro, Seongsan-gu, Changwon-si, Gyeongsangnam-do, KOREA