LG

MFL05849902260 4REV01

115QNED90*
115QNED92*
115QNED93*





www.lg.com

PDF

x 1

x 4

x 8
(M6 x L23)

1

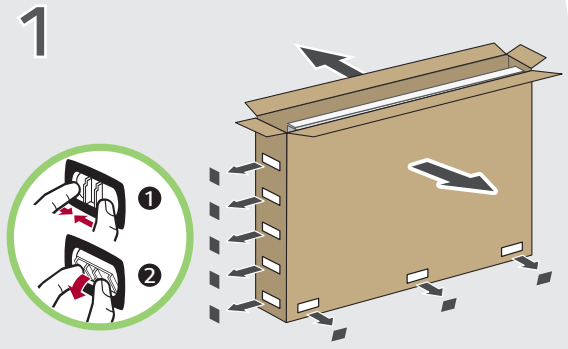

2

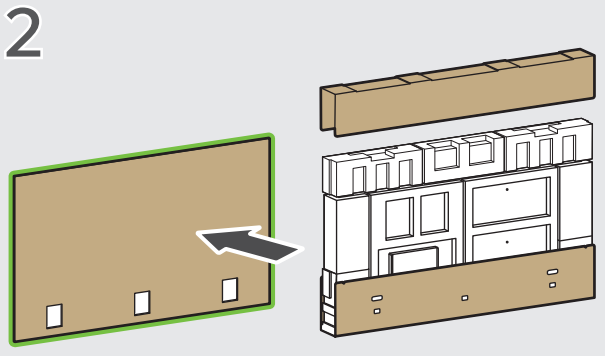

3

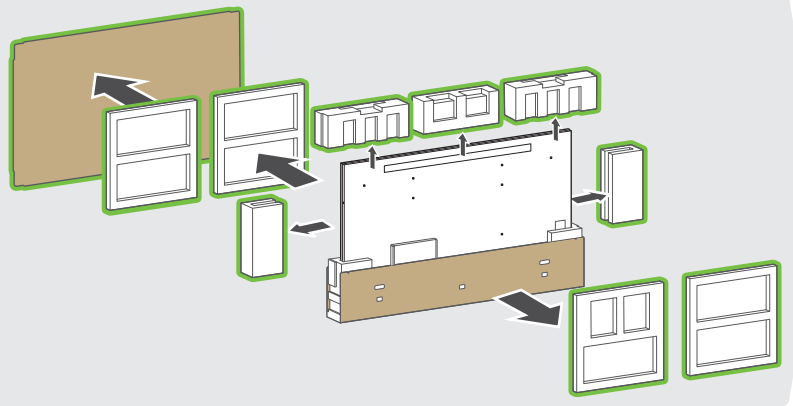

4

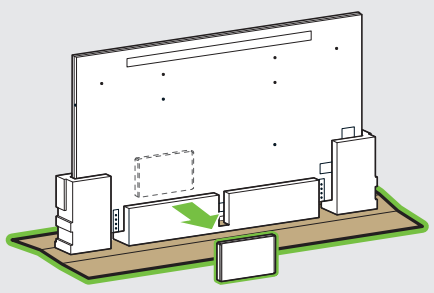

5

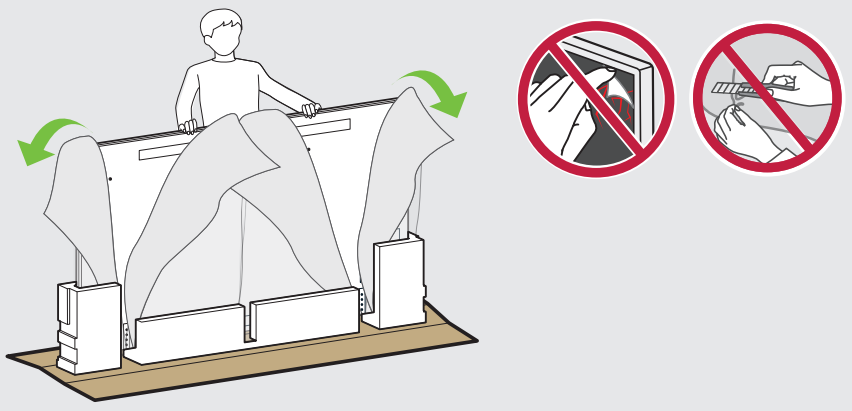

6

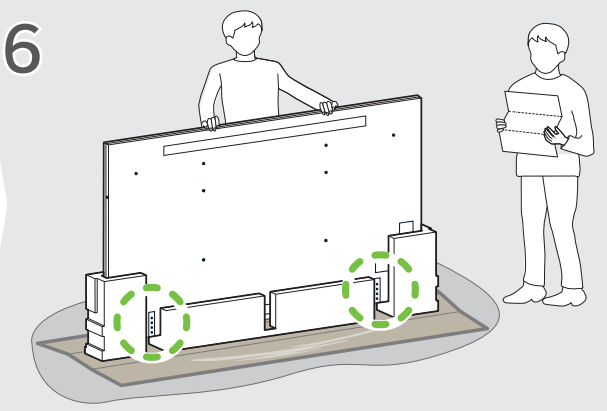

1

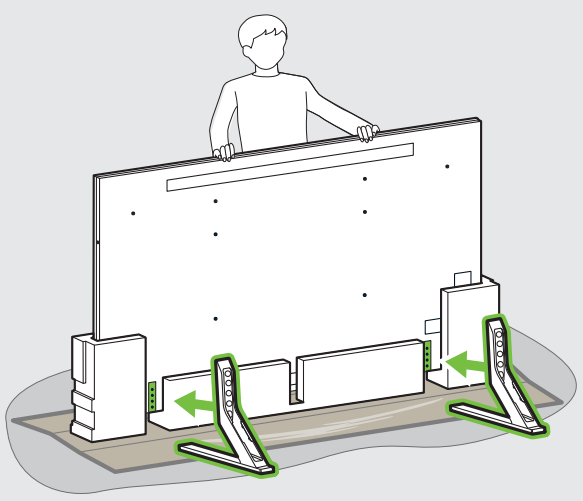

x 8



55 mm
(2.1) inches

F

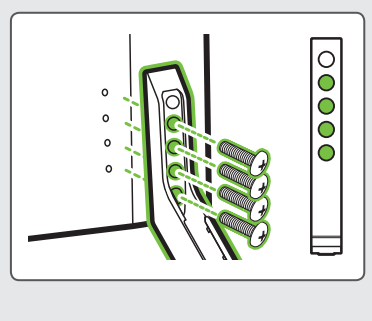

85 mm
(3.3) inches

F'

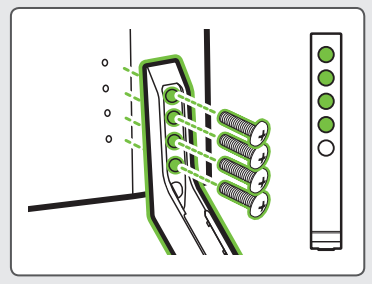

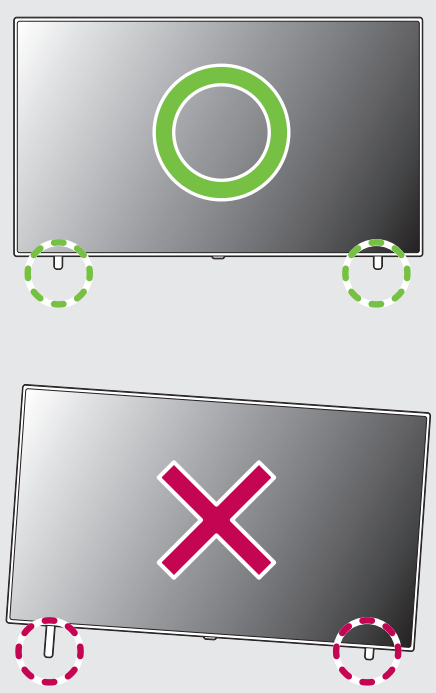

2

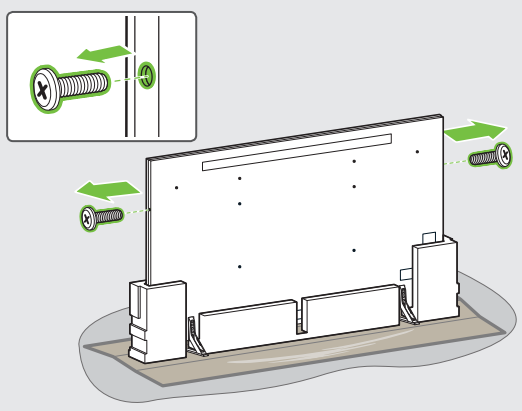

3

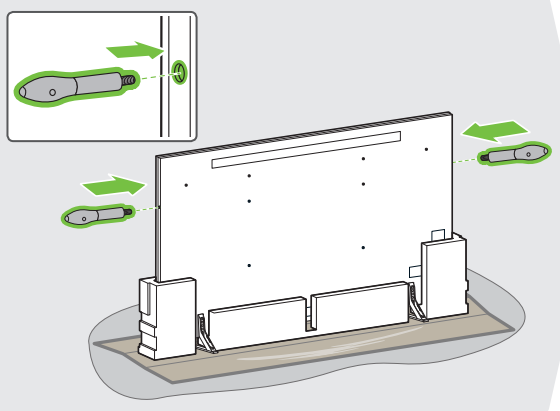

4

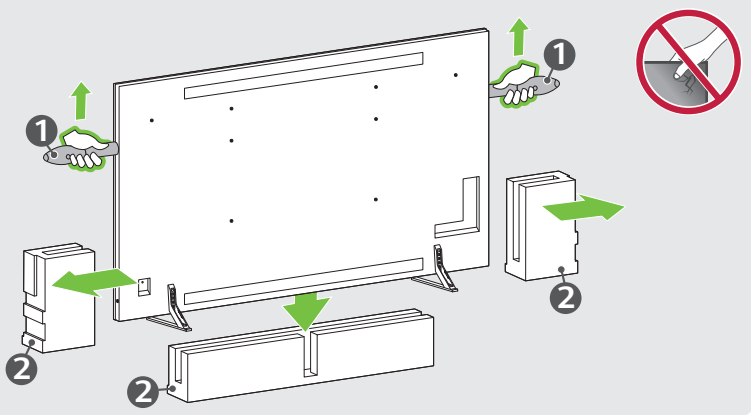

5

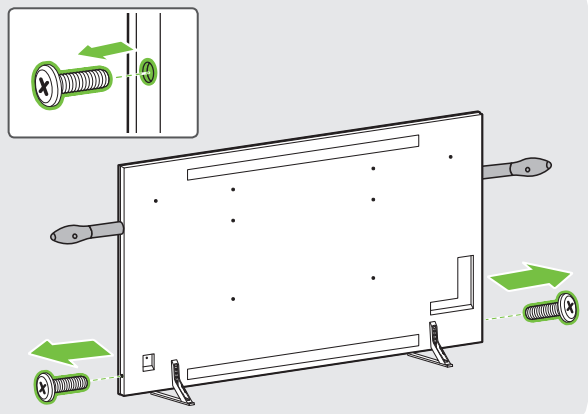

6

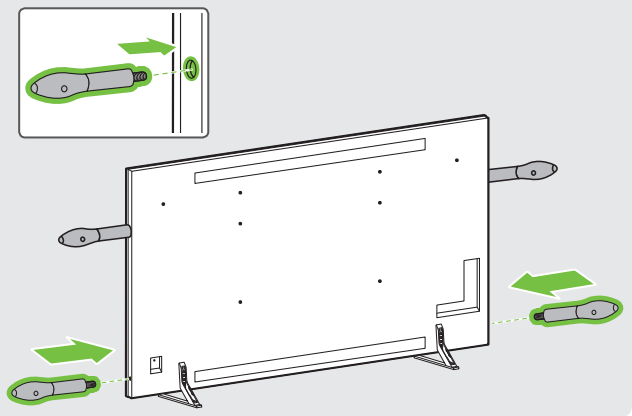

7

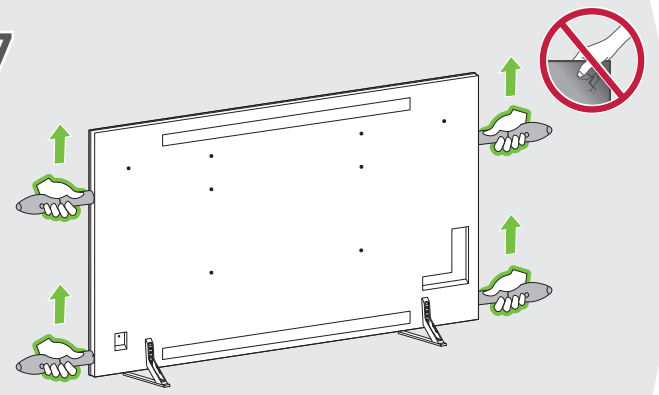

8

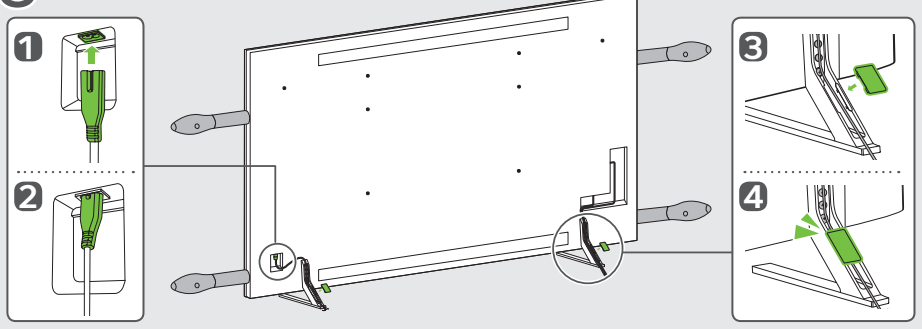

9

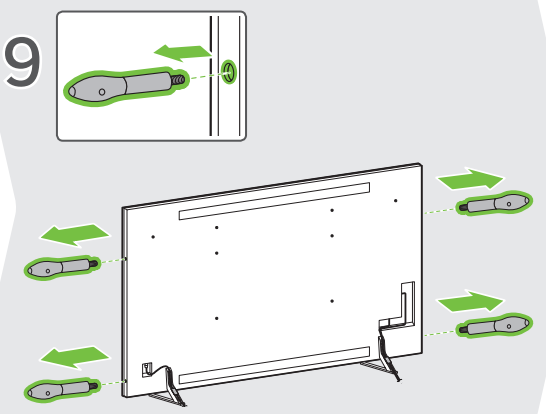

10

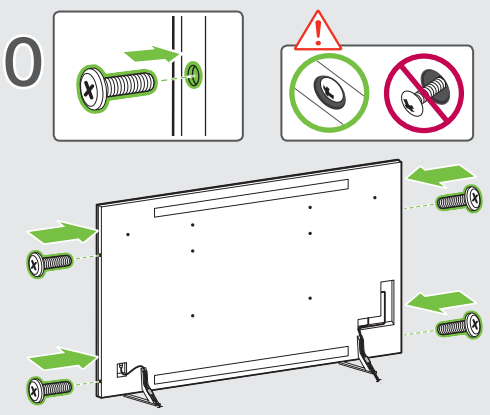

11

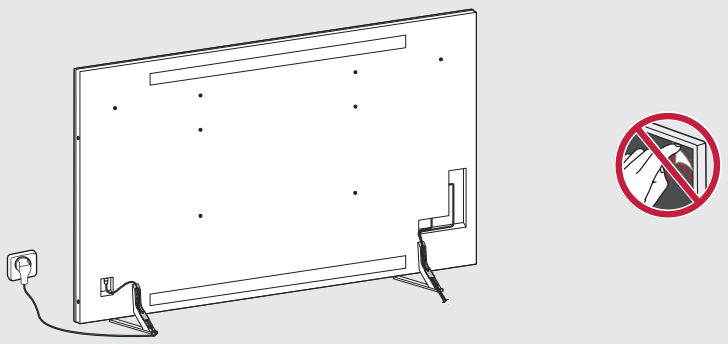



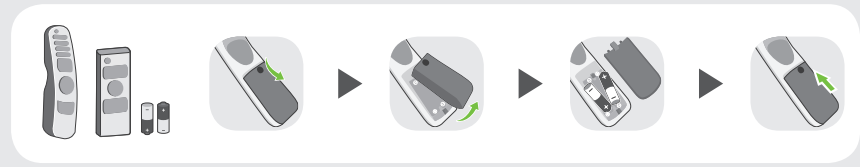



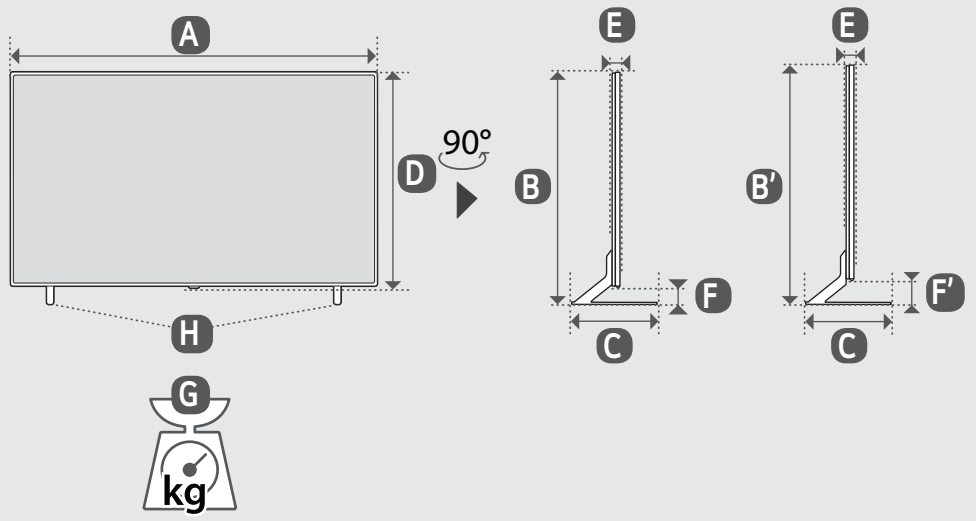

	mm (inches / pulgadas / po / pol.)						kg (lbs / libras / lb)	
	A	B/B'	C	D	E	F/F'	G	G - H
115QNED90* 115QNED92* 115QNED93*	2 565 (100.9)	1 524 (60) / 1 554 (61.1)	465 (18.3)	1 469 (57.8)	58.9 (2.3)	55 (2.1) / 85 (3.3)	96.0 (211.6)	93.3 (205.6)

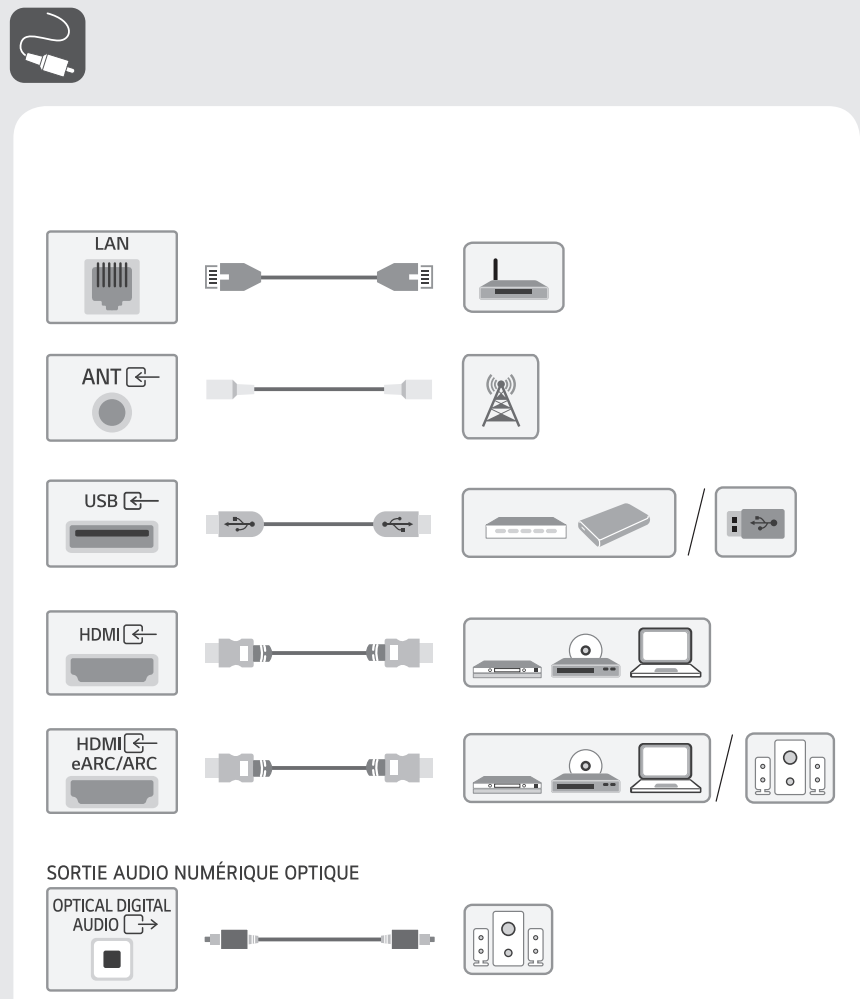

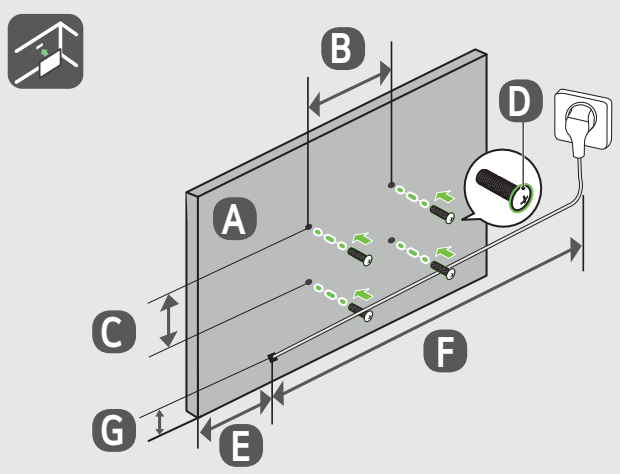

mm (inches / pulgadas / po / pol.)

A	B x C mm	D	E mm	F m	G mm
115QNED90* 115QNED92* 115QNED93*	1 000 x 700 (39.3 x 27.5) 1 000 x 500 (39.3 x 19.6)	M8	180 (7.0)	≧ 1.5 (59.0) inches	240 (9.4)

* : 0~9, A~Z

Printed in Korea
Imprimé en Corée