Quick Setup Guide

LED LCD COMPUTER MONITOR

(LED Computer Monitor)

You can download manuals from the LGE website.
OWNER'S MANUAL AND REGULATORY INFO. are available at *https://www.lg.com/au/support/manuals*.
PLEASE READ SAFETY INFORMATION BEFORE INSTALLATION AND USE. SCAN QR CODE TO ACCESS.

22MR410
24MR400-BA
24MR400-BB
24MR400-WB
27MR400

MBM67545606
(2405-REV01)

www.lg.com

Copyright © 2023 LG Electronics Inc. All Rights Reserved.

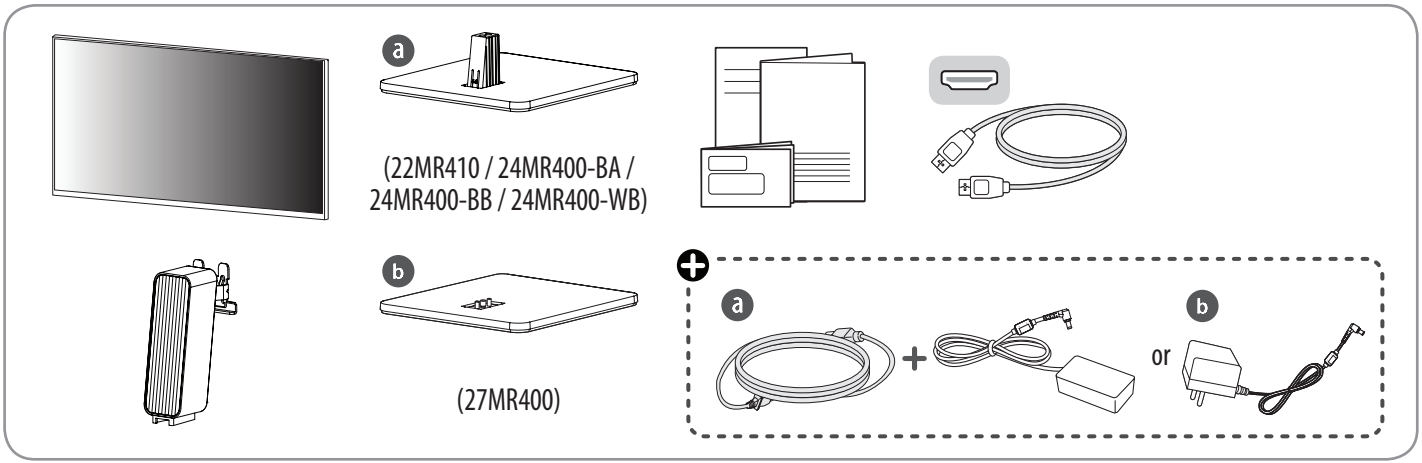

⊕ Depending on country

It is recommended that use the supplied components.

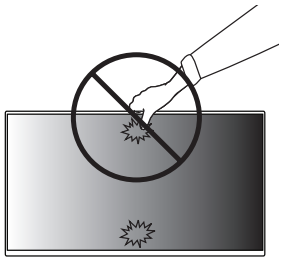

1

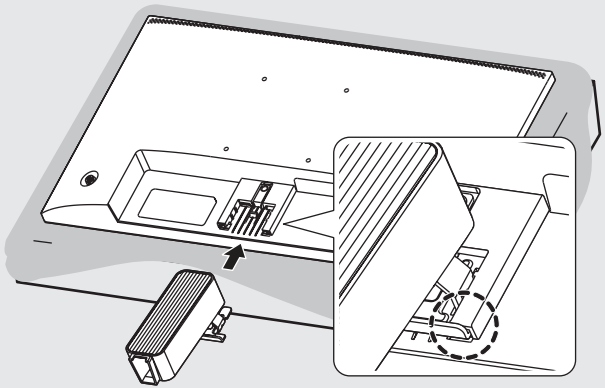

2-1

(22MR410)

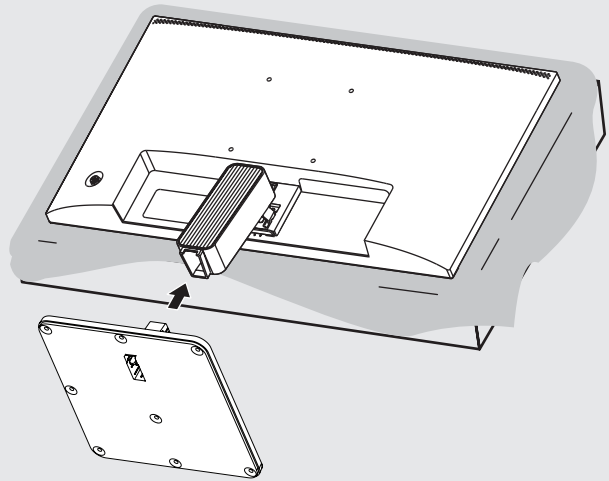

2-2

(24MR400-BA / 24MR400-BB / 24MR400-WB)

Type A

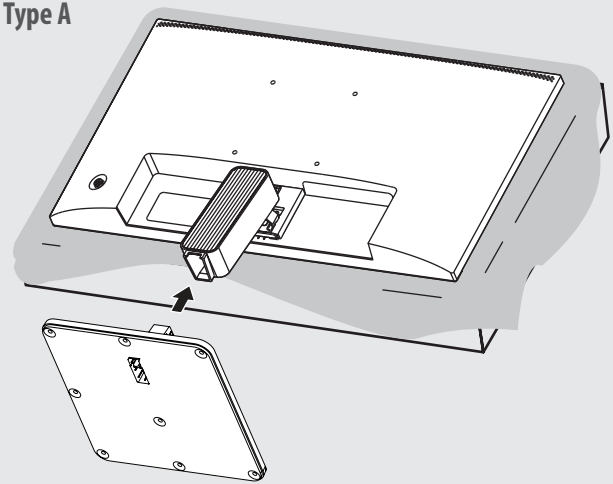

Type B

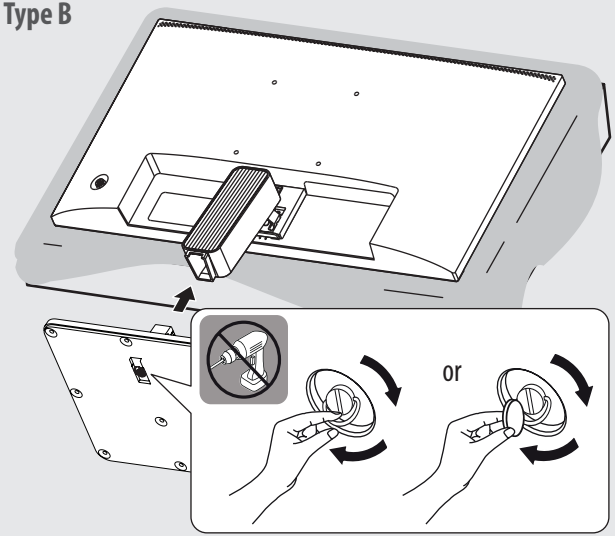

2-3

(27MR400)

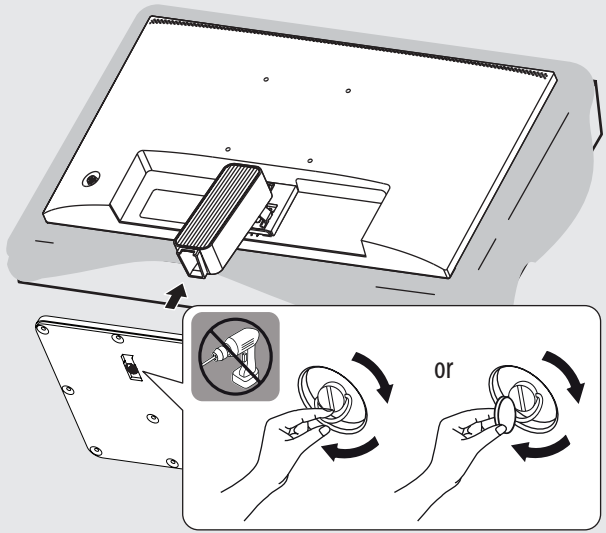

3

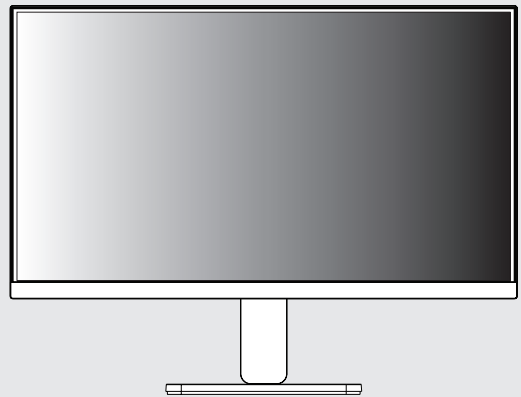

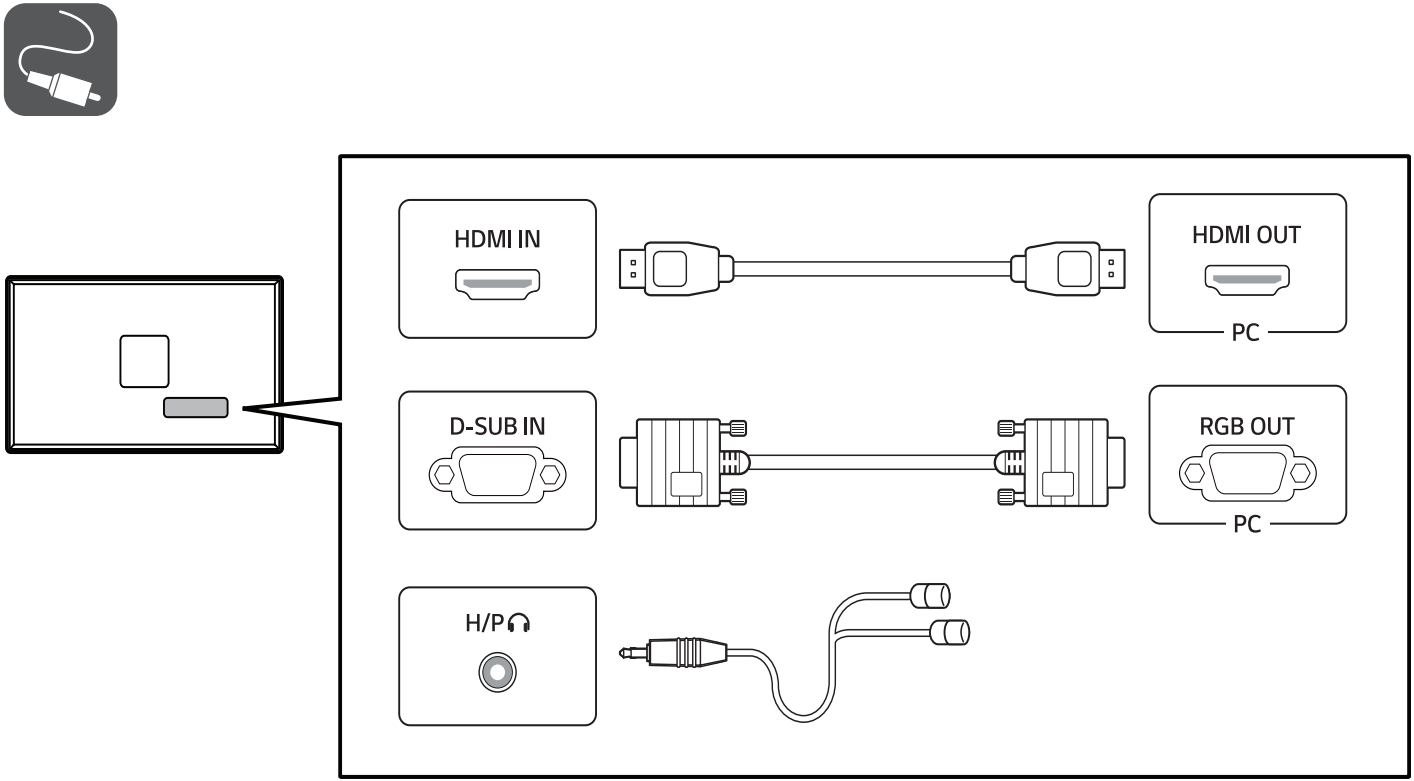
HDMI IN
HDMI OUT
PC
D-SUB IN
RGB OUT
PC
H/P

- Using a DVI to HDMI / DP (DisplayPort) to HDMI cable may cause compatibility issues.
- Make sure to use the supplied cable. Otherwise, this may cause the device to malfunction.

a

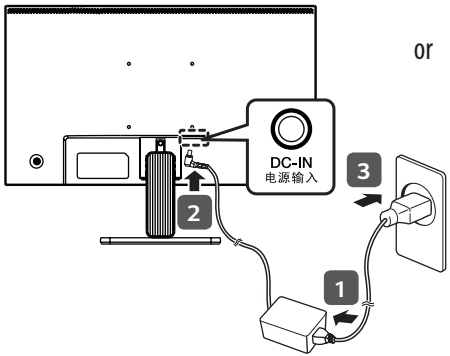

or

b

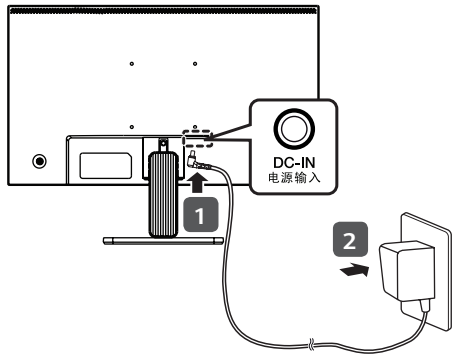

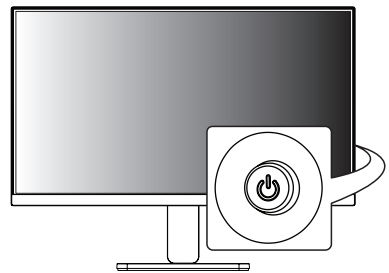


LG
Life's Good