LG
Life's Good

MFL71886612220 3REV02

www.lg.com

UQ80*

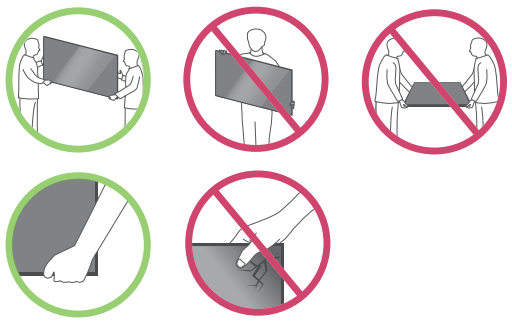

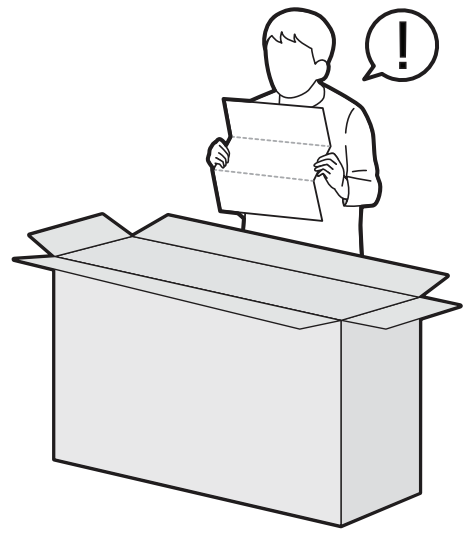

50/55UQ80*

1-A

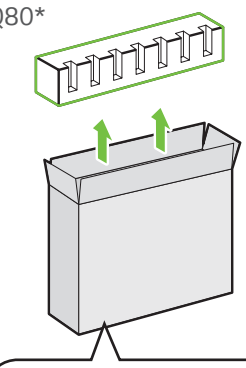

2-A

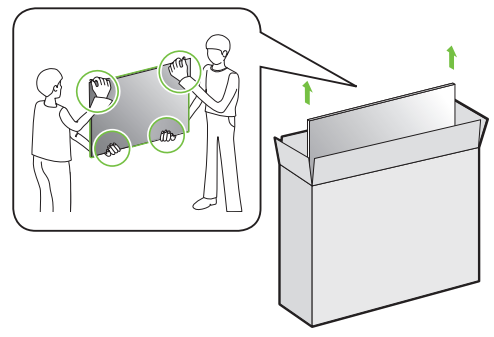

3

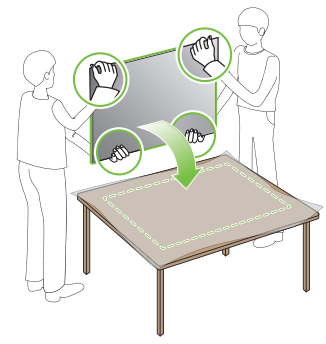

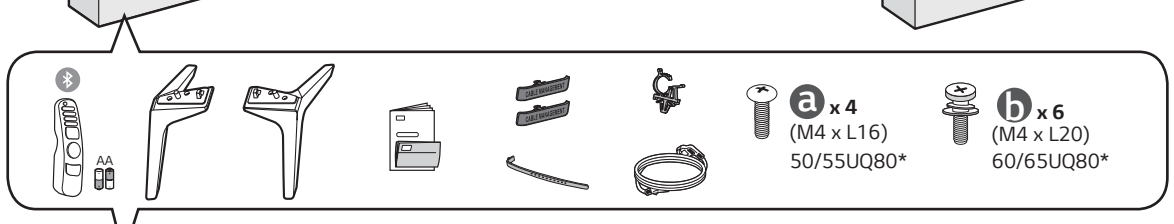

60/65UQ80*

1-B

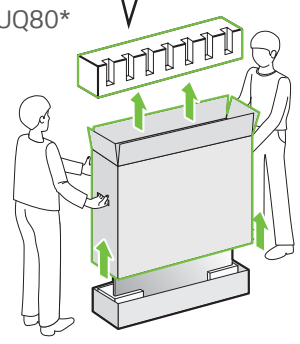

2-B

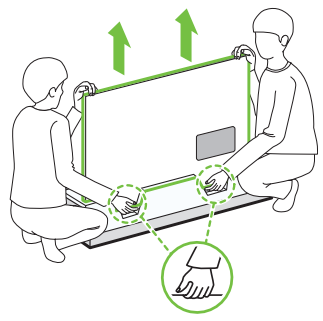

3

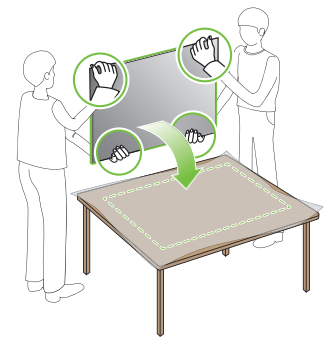

1

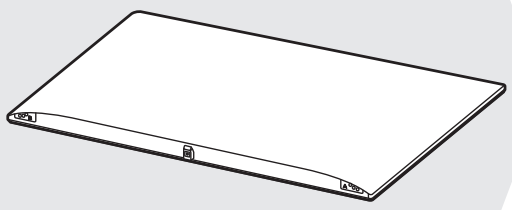

2

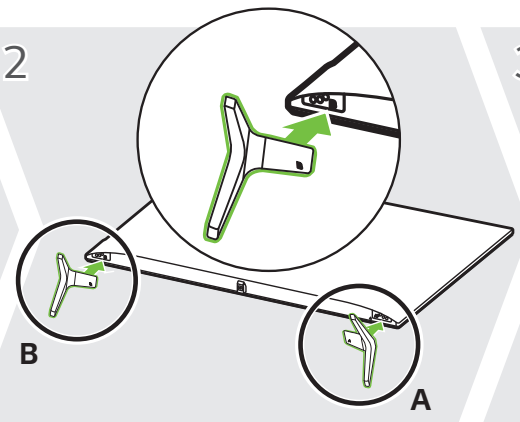

3

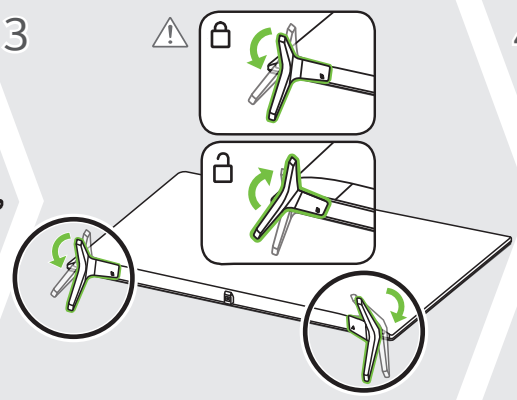

4-A 50/55UQ80*

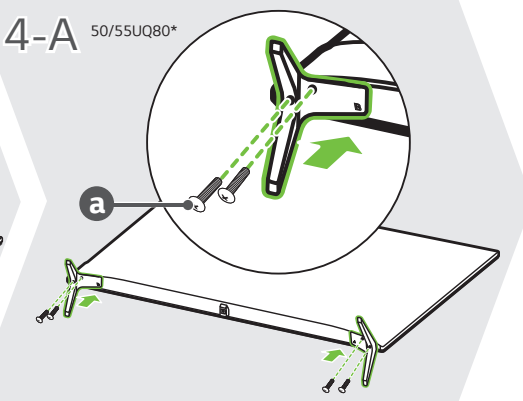

4-B 60/65UQ80*

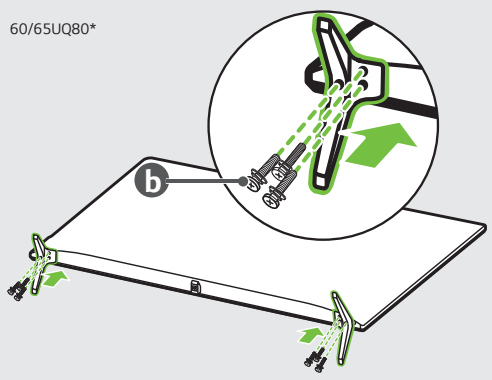

5

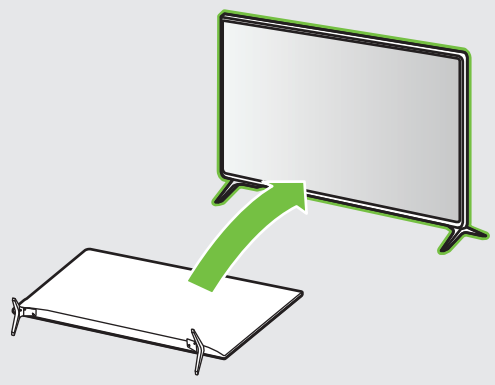

6

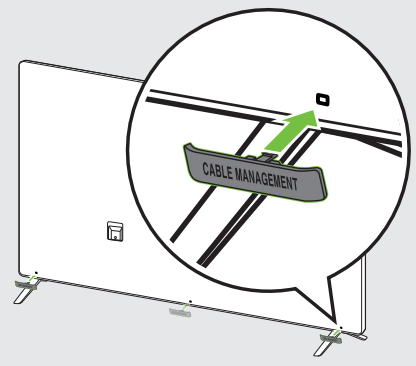

7

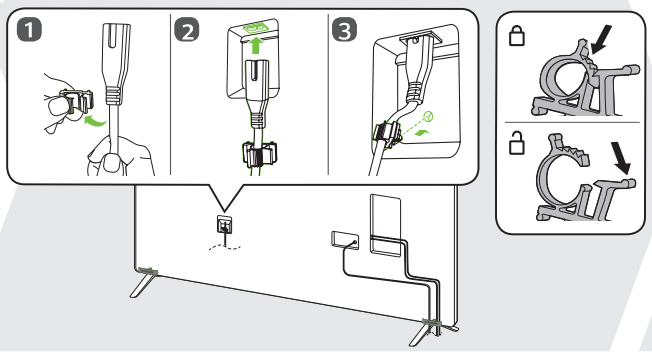

8

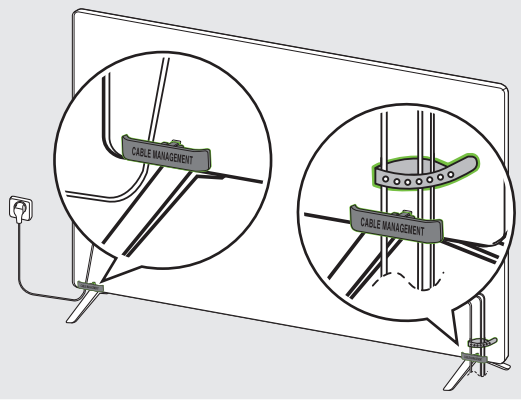

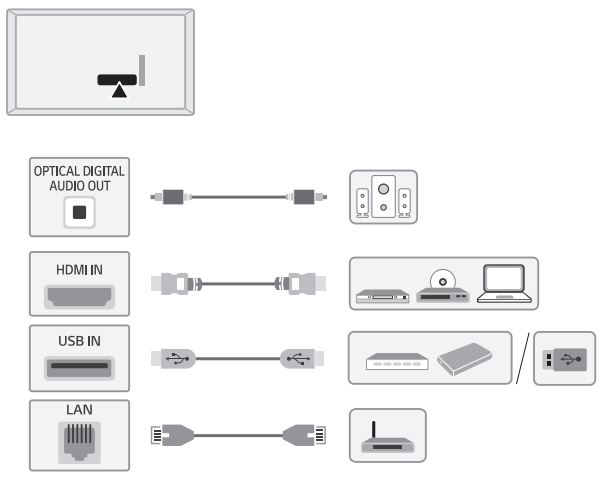

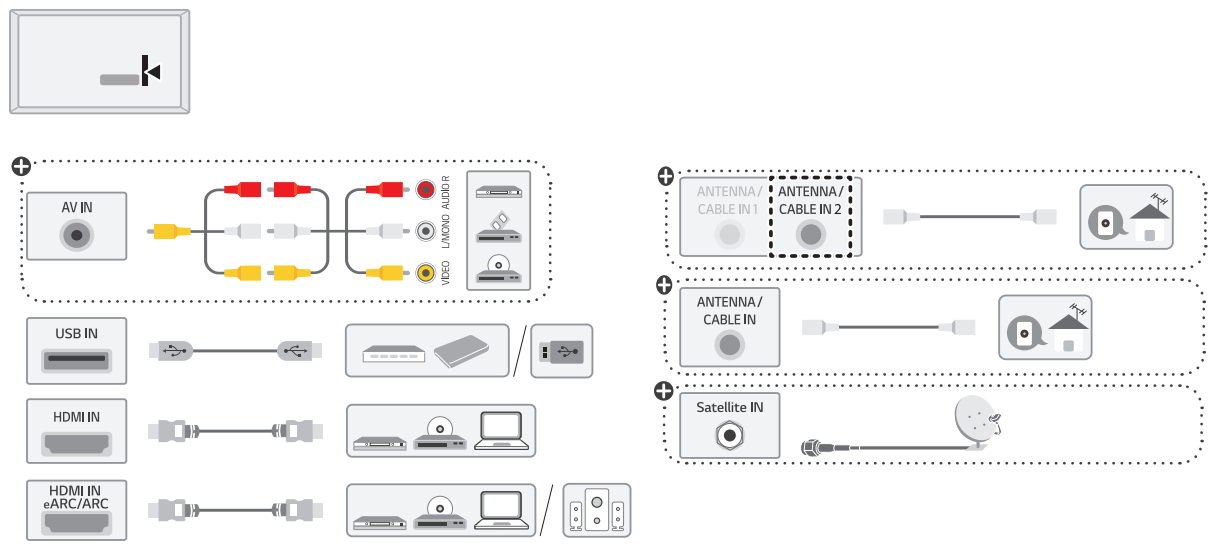





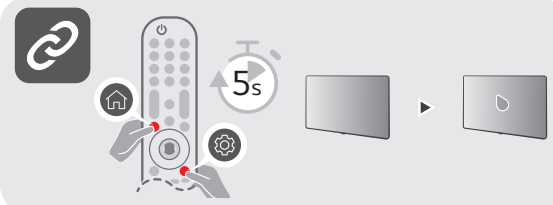

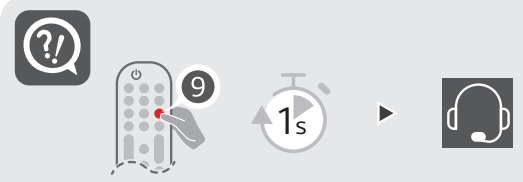

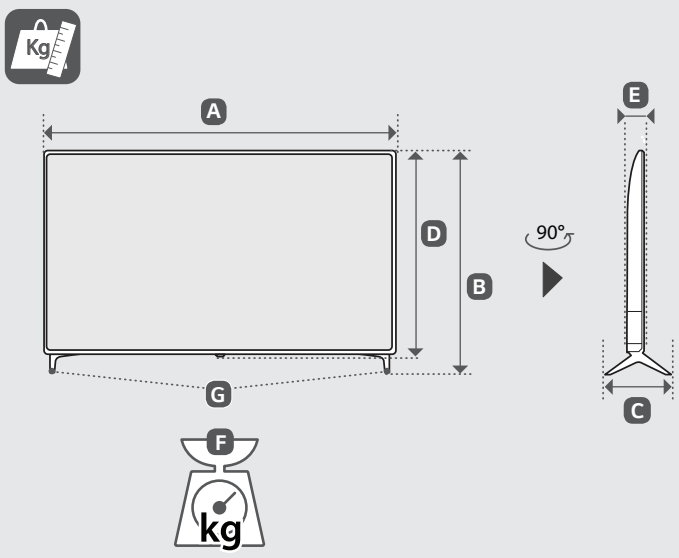

	A	B	C	D	E	F	F - G
	(mm)					(kg)	
50UQ80006LB 50UQ8000PSL 50UQ80006LD 50UQ8050PSB 50UQ80006LM 50UQ8050PSK 50UQ8000PSC	1121	713	231	651	57.1	11.9	11.7
55UQ80006LB 55UQ8020PSK 55UQ80006LD 55UQ8040PSB 55UQ80006LM 55UQ8040PSK 55UQ8000PSC 55UQ8050PSB 55UQ8000PSL 55UQ8050PSK 55UQ8020PSB	1235	776	231	715	57.5	14.2	14.0
60UQ8000PSC 60UQ8050PSB 60UQ8000PSL 60UQ8050PSK	1356	852	269	783	57.5	17.4	17.1
65UQ80006LB 65UQ8020PSK 65UQ80006LD 65UQ8040PSB 65UQ80006LM 65UQ8040PSK 65UQ8000PSC 65UQ8050PSB 65UQ8000PSL 65UQ8050PSK 65UQ8020PSB	1454	906	269	838	57.7	21.8	21.5
Power requirement / متطلبات الطاقة / Alimentation / Requisito de alimentação / แรงดันและความถี่ไฟฟ้า / Nguồn điện yêu cầu				AC 100-240 V~ 50/60 Hz تيار متردد 100-240 فولت ~ 60/50 هرتز			

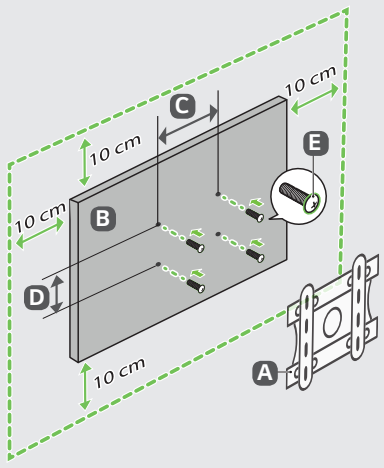

A	B	C x D (mm)	E
LSW240B MSW240	50UQ80*	200 x 200	M6
OLW480B MSW240	55UQ80*	300 x 300	M6
OLW480B	60/65UQ80*	300 x 300	M6

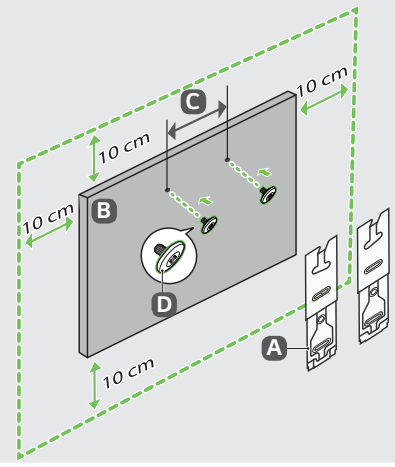

A	B	C (mm)	D
WB21LMB	50UQ80*	200	M6
	55/60/65UQ80*	300	

English • Read **Safety and Reference.**

العربية • قراءة **الأمان والمرجع**.

Français • Lire le document **Sécurité et référence.**

Português • Consulte o manual **Segurança e referência.**

ภาษาไทย • โปรดอ่านคู่มือผู้ใช้**ความปลอดภัยและการอ้างอิง**

Tiếng Việt • Đọc phần **An toàn và Tham khảo.**

⊕ : Depending on model / حسب الطراز / Selon le modèle / Dependendo do modelo / ขึ้นอยู่กับรุ่น / Tùy theo mã sản phẩm

English • The Analog Gender adapter can be purchased separately at Customer Service.

العربية • يمكن شراء النوع التناظري بشكل منفصل من دعم عملاء LG.

Français • L'adaptateur analogique peut être acheté séparément auprès du SAV.

Português • O adaptador analógico pode ser comprado em separado no Serviço de Apoio ao Cliente da LG.

ภาษาไทย • สายรวมสัญญาณ Component และ AV สามารถซื้อแยกต่างหากได้ที่ศูนย์บริการของบริษัท

Tiếng Việt • Đầu chuyển tín hiệu analog có thể mua riêng tại Trung tâm chăm sóc khách hàng của LG.