OWNER'S MANUAL

LG Digital Signage

(MONITOR SIGNAGE)

Please read this manual carefully before operating your set and retain it for future reference.

43UM3DG
49UM3DG
55UM3DG
65UM3DG

www.lg.com

Copyright © 2020 LG Electronics Inc. All Rights Reserved.

TABLE OF CONTENTS

SAFETY PRECAUTIONS 3

- Precautions for the AC Adapter and Power 4
- Precautions for Moving the Product.....6
- Precautions for Installing the Product 7
- Precautions for Cleaning the Product.....9
- Precautions for Using the Product.....10
- Precautions for Using the Remote control.....12
- Precautions for Experiencing Image Retention.....13
- Product Disposal.....13

ASSEMBLY AND PREPARATION..... 14

- Optional Accessories.....15
- Parts and Buttons.....16
- Connecting the Stand.....17
- Connecting the IR Sensor 18
- Portrait Layout.....21
- Assembling the Memory Cover.....22
- Installing on a Wall.....23

REMOTE CONTROL 25

MAKING CONNECTIONS..... 27

- Connecting to a PC.....27
- External Device Connection.....27
- Using the Input List 28
- Connecting Multiple Monitors.....29

TROUBLESHOOTING..... 30

PRODUCT SPECIFICATIONS..... 34

LICENSES..... 39

WARNING - This equipment is compliant with Class A of CISPR 32. In a residential environment this equipment may cause radio interference.

SAFETY PRECAUTIONS

The safety precautions are intended to prevent unexpected danger or harm by helping the user to use the product safely and for its intended purpose.

⚠ WARNING

If you ignore the warning message, you may be seriously injured or there is a possibility of accident or death.

⚠ CAUTION

If you ignore the caution message, you may be slightly injured or the product may be damaged.

⚠ WARNING

- Indoor Use Only.

Precautions for the AC Adapter and Power

⚠ WARNING

- Use only the power cord or AC adapter provided or approved by LG Electronics, Inc. If you use another power cord, make sure that it is certified by the national standards. If the power cable is faulty in any way, please contact the manufacturer or the nearest authorized service center for a replacement.
- Operate the display only from a power source(i.e. voltage) indicated in the product specification.
  - Otherwise the product can be damaged, fire can occur or you may be electrocuted. If you are not sure what type of power supply you have, consult a certified installation company.
- Make sure the power cord connect to a properly grounded outlet.
  - If you do not you may be electrocuted or injured or the product can be damaged.
- Insert the power plug or AC adapter firmly so it cannot come loose.
  - Poor connection may cause a fire or electric shock.
- In the presence of thunder and lightning, never touch the power cord and signal cable because it can be very dangerous.
  - It can cause electric shock.
- Be careful not to step or place heavy objects (electronic appliances, clothing, etc.) on the power cord or AC adapter. Additionally, do not bend or pull out the power cord or AC adapter with excessive force.
  - Damaged power cords may cause a fire or electric shock.
- Do not connect power cord or AC adapter damaged with sharp objects to power outlet.
  - You may be electrocuted.
- Do not insert a conductor (like a metal chopstick) into one end of the power cord while the other end is connected to the input terminal on the wall. Additionally, do not touch the power cord right after it is unplugged.
  - You may be electrocuted.
- Do not use with a multi-outlet connected by many electrical product and heating devices. Use an exclusive multi-outlet with a grounding terminal.
  - A fire can break out due to overheating.

- If water or any foreign substance goes inside the product, disconnect the power cord immediately and contact the service center.
  - Otherwise, this may cause a fire or electric shock due to damage to the product.
- Keep the power cord or AC adapter away from any heating devices.
  - The cord coating may melt and cause fire or electric shock.
- Never disassemble, repair or modify the power cord or AC adapter.
  - This may cause a fire or electric shock.
- The main cutoff device is the power cord. Please make sure the product is installed near the wall outlet and that it is easily accessible.
- As long as this unit is connected to the AC wall outlet, it is not disconnected from the AC power source even if the unit is turned off.
- Power consumption will be '0' only when the power plug is unplugged.
- Use the appliance coupler as the disconnect device.

⚠ CAUTION

- If the outlet pins of the power plug or AC adapter is covered with dust, be sure to wipe them and keep them clean.
  - Overheating due to layers of dust may cause a fire or electric shock.
- If the outlet pins of the power plug or AC adapter is covered with water be sure to wipe them and keep them clean. Additionally, Do not touch the power plug or AC adapter with wet hands.
  - This may cause an electric shock.
- Do not turn the product on or off by plugging in or unplugging the power plug from the power outlet. Do not use the power socket as a switch.
  - This may cause an electric shock or product malfunction.
- Do not unplug the power cord while the product is in use.
  - Electrical shock can damage the product.

Precautions for Moving the Product

WARNING

- Contact the service center before moving the product.
  - It may cause electric shock and damage the product.
- Make sure the product is turned off, unplugged, and all cables have been removed before the product is moved.
  - You may be electrocuted or the product can be damaged.
- When moving the product, do not shock or cause an impact on the front panel.
  - You may be electrocuted or the product can be damaged.
- Use the correct number of people according to the weight of the product. (Under 25Kg per person use lifting equipment when exceeding 100 Kg)
  - If use the damaged product again, contact the service center because it can cause electric shock or fire.
- Do not hold it upside down while holding only the stand. (It is for stand supported models only.)
  - This may cause stand warping, panel damage and other types of product damage.

CAUTION

- Do not dispose of the product-packing box. Use it when moving by putting the product in the box to carry it.

Precautions for Installing the Product

⚠ WARNING

- Contact the service center before installing the product.
  - It can cause electric shock and damage the product.
- Do not drop an object on or impact on the product. Keep out of reach of children and do not place toys or objects near the product to prevent throwing things on the product screen.
  - It can cause injury to human, problem to product and damage the display.
- Do not put heavy objects on, or hang from, the product.
  - If the product collapses or is dropped, you may be injured.
- Do not touch the surface of the product if it overheats.
  - It can cause injury to human.
- Install the product firmly fixed on a floor, wall, etc. to prepare against external impact such as wind and earthquake.
  - You must refer to the manual provided.
- Prevent Children from climbing or hanging on the product.
  - If the product collapses or is dropped, you may be injured.
- Do not install it where there are heating devices such as electrical heaters or lighting equipment.
  - Fire, electrical shock, malfunction may occur.
- Do not install this product by yourself as you may injure yourself or cause damage to the product. Please contact service engineer authorized by service center.
- Do not install this product on a wall if it could be exposed to oil or oil mist.
  - This may damage the product and cause it to fall.
- Do not leave the power or signal cable, etc. on the pathway.
  - This could cause a trip or fall, which could cause an electrical shock, fire, product breakdown, or injury.
- Do not let the product drop when connecting it to an external device connected with a short cable.
  - This may cause injury and damage to the product.
- If you dropped the product or the case is broken, turn off the product and unplug the power cord and contact the service center.
  - If you continue to use without taking proper measures, electrical shock or fire can occur.
- Install the product in a dry place where it is not near dust and water. Avoid high temperatures and humidity.
  - This may cause electrical shock, fire or product damage.
- Safely install the product in a place that can hold the weight of the product.
  - A lack of strength may cause the product to fall.
- Take a comfortable and natural position to relax the muscles when working with a product.

⚠ CAUTION

- Install the product where no Electromagnetic Interference occurs.
- If you install the product in a place that does not meet the recommended conditions, this may cause serious damage to the product's picture quality, life cycle, and appearance. Please check with service engineer before installing. Please do not install the product in places such as where there is an abundance of fine dust or oil mist, chemical substances are used, exposed to direct sunlight, the temperature is very high or low, the humidity is very high.
- Make sure the product is well ventilated by Installing at a distance (100 mm or more) from the wall.
  - If you install the product too close to the wall, it may be deformed or fire can break out due to internal heat buildup.
- Do not cover the product with a tablecloth or a curtain or other materials (e.g. plastic) while plugged in. Do not block the ventilation hole of the product.
  - The product can be deformed or fire can break out due to overheating inside the product.
- Do not install the product in an area with poor ventilation (e.g. on a bookshelf, in a closet) or outside and avoid placing on cushions or carpets.
  - The product could catch fire due to overheating inside the product.
- Install the product on a flat and stable place that is large enough to support the product.
  - If the product is dropped, you may be injured or the product may be broken.
- When installing the product on a shelf or cabinet, make sure that the bottom end of the product is not protruding forward.
  - The product may fall due to unbalanced center of gravity, which may cause personal injury or damage to the product. Be sure to use cabinets or shelves that fit your product.

Precautions for Cleaning the Product

WARNING

- Keep the product clean at all times.
  - If you don't clean the unit for a long time and it becomes covered in dust, it can cause fire or product damage.
- When you need to clean the inside of the product, you must contact the service center.
  - Otherwise, cleaning without support may cause a fire, electric shock, or damage to the product.
- When cleaning the product, unplug the power cord and wipe gently with a soft cloth to prevent scratching.
  - An electric shock may occur or damage to the screen if its scratched.
- When you want to clean the front frame, spray water onto a soft cloth 2 to 4 times and wipe in one direction only.
  - Too much moisture may cause staining.

CAUTION

- When cleaning the product or the screen, unplug the power cord and wipe it gently with a soft cloth. Do not spray water or other liquids directly on the product. Especially, do not clean your product with chemicals including glass cleaner, any type of air freshener, insecticide, lubricants, wax (car, industrial), abrasive, thinner, benzene, alcohol, etc., which can damage the product or its panel.
  - This may result in fire, electric shock or product damage (deformation, corrosion or breakage).

Precautions for Using the Product

⚠ WARNING

- Do not use the product in any environment with excessively high temperatures or humidity.
- If you use the product for a long period of time, take a rest from time to time to protect your vision.
  - Extended viewing could result in impaired vision.
- Listening at high volume or using for a long time can cause damage to your hearing.
- In the event that liquid or a foreign object falls into the product, please switch it off and unplug it from the wall outlet and contact the service center.
  - Otherwise, the product may cause fire or electric shock.
- In the event that no image appears on the screen or no sound is heard, stop using the product. Switch it off immediately, unplug it from the power outlet and contact the service center.
  - Otherwise, the product may cause fire or electric shock.
- Do not drop an object or impact on the product or screen.
  - It can cause injury to human, problem to product and damage the screen.
- If you can smell smoke or other odors or hear a strange sound, unplug the power cord and contact the service center.
  - If you continue to use the product without taking proper measures, it may cause electrical shock or fire.
- Do not attempt to disassemble, repair or modify the product yourself. Please contact service center if you need to repair it.
  - Fire or electric shock can occur.
- Do not place objects filled with liquids such as vases, cups etc. on or over the product to prevent liquid from entering the product.
  - Failure to do so may result in fire, electric shock, malfunction or deformation.
- Do not push hard on or scratch the product's surface with your hands or sharp objects, such as nails, pencils or pens. Do not shock or scratch the front and sides of the screen with metallic objects.
  - This may damage the products and cause it to malfunction.
- Do not touch the product if it has been exposed to sunlight or an intense light because it could be hot.

- Do not use high voltage electrical goods near the product (e.g., a bug zapper).
  - This may result in product malfunction if it receives an electrical shock.
- If there is a gas leak, do not touch the outlet, and open the windows for ventilation.
  - Otherwise, the product may cause fire or electric shock.
- If you dropped the product or the case is broken, turn off the product and unplug the power cord.
  - If you continue to use without taking proper measures, electrical shock or fire can occur. Contact the service center.
- Keep small accessories out of the reach of children.
  - If a child swallows it, consult a doctor immediately.
- Keep out of reach of children from the product. Also, do not throw toys or objects to the product or screen.
  - It can cause injury to human, problem to product and damage the screen.
- All the power sources must be disconnected by removing the power cables to remove all power from the unit.

⚠ CAUTION

- This panel is an advanced product that contains millions of pixels. You may occasionally see pixel spots when viewing the screen. Since these deactivated pixels are not a defect, the performance and reliability of the product is not affected.
- Do not put or store inflammable substances near the product.
  - There is a danger of explosion or fire.
- Keep the proper distance from the product.
  - It can cause damage to your vision if you look at the product too closely.
- Set the appropriate resolution and frequency by products.
  - It can cause damage to your vision.
- Take a regular break when working with the product for a long time.

Precautions for Using the Remote control

⚠ WARNING

- Avoid places with high humidity.
  - It may cause electrical shock or damage the product.
- Do not expose batteries to excessive heat, such as direct sunlight, open fireplace, and electric heaters.
  - It may cause fire and you may be injured.
- Make sure that children do not swallow the remote control batteries when you replace them. Keep batteries out of reach of children.
  - If a child swallows a battery, consult a doctor immediately.
- Do not dispose of batteries in a fire.
  - Please dispose batteries at a local recycling center or a retail store that handles batteries.
- Used batteries, which include rechargeable batteries, should be recycled separately from waste.
  - Please dispose used batteries and rechargeable batteries at a local recycling center or a retail store that handles batteries.

⚠ CAUTION

- Do not short circuit and disassemble of batteries.
  - It may cause electrical shock or fire.
- The remote control may not function properly in sunlight or under a strong lamp. Move the product if it is being used in these conditions.
- Check if there is any obstacle between the product and the remote control.
- Do not mix new batteries with old batteries.
  - Overheating or leaking batteries may cause fire or electric shock.
- Only use the specified type of battery. Do not insert batteries that are not rechargeable into the charger.
  - Overheating or leaking batteries may cause fire or electric shock.

Precautions for Experiencing Image Retention

- Displaying a still image for a prolonged period of time may cause damage to the screen, resulting in image retention. Most third-party products have the same issue. The resulting damage is not covered by the product warranty.
  - Use a screen saver when using the monitor for a prolonged period of time.

Product Disposal

- Do not dispose of this product with general household waste.
- Disposal of this product must be carried out in accordance to the regulations of your local authority.

ASSEMBLY AND PREPARATION

⚠ CAUTION

- Always use genuine components to ensure safety and product performance.
- The product warranty will not cover damage or injury caused by the use of counterfeit components.

NOTE

- The accessories provided with your product may vary depending on the model or region.
- Product specifications or contents in this manual may be changed without prior notice due to upgrade of product functions.
- SuperSign Software & Manual
  - Downloading from the LG Electronics website.
  - Visit the LG Electronics website (*http://partner.lge.com*) and download the latest software for your model.
- The warranty will not cover any damage caused by using the product in an excessively dusty environment.

Optional Accessories

Without prior notice, optional accessories are subject to change to improve the performance of the product, and new accessories may be added. The illustrations in this manual may differ from the actual product and accessories.

Stand kit

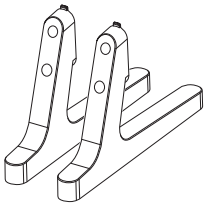

ST-653T

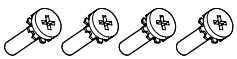

Screws
Diameter 4.0 mm x Pitch 0.7 mm x Length 12.0 mm

Media Player kit

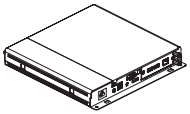

Media Player
MP500/ MP700



Screws
Diameter 3.0 mm x Pitch 0.5 mm x Length 6.0 mm



CD (Owner's Manual)/ Cards

NOTE

- Cable holder/cable tie may not be available in some areas or for some models.
- Optional accessories are available for some models. If necessary, please purchase them separately.
- Before you attach the OPS kit or Media Player, connect the cable to the port.

Parts and Buttons

The image may be different according to the model.

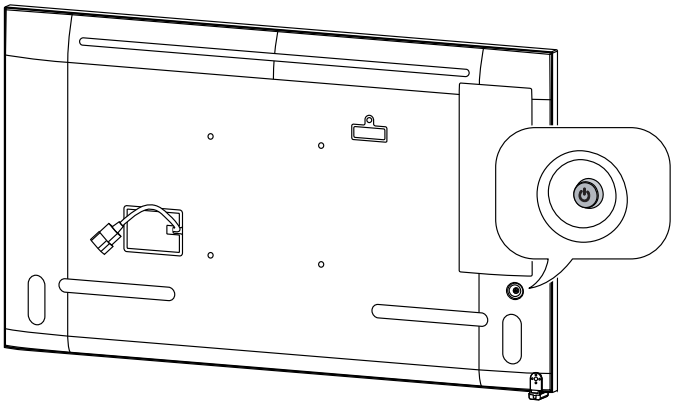

Power On (Press)
Quick Menu (Press [1])
Menu Selection (Press [2])
Power Off [3] (Press and Hold)

Volume Control
Menu Control [2]

Menu Control [2]

1 When the monitor is turned on, press the ⏻ button one time.
2 You can use the function when you control menu.
3 All running apps will close.

Quick Menu

⏻ Turns the power off.

Changes the input source.

Accesses the main menu.

Close the quick menu.

Connecting the Stand

- For certain models only.
- The image may be different according to the model.

1

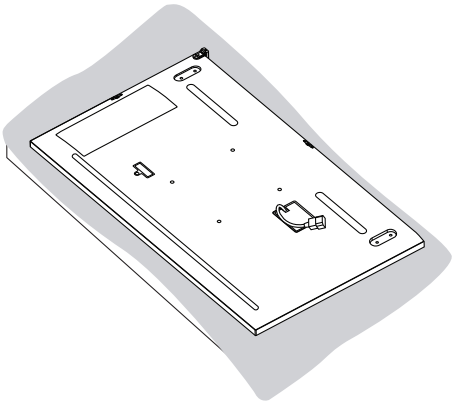

2

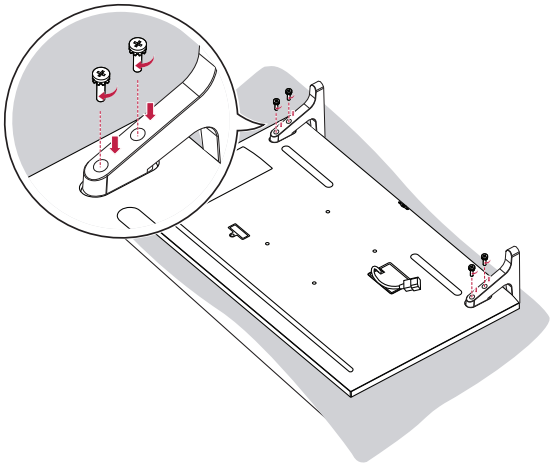

Connecting the IR Sensor

When you connect the cable to the product, the feature for receiving remote control signals is activated. Rotate the IR sensor according to the screen orientation (Landscape/Portrait).

- The image may be different according to the model.

Basic installation

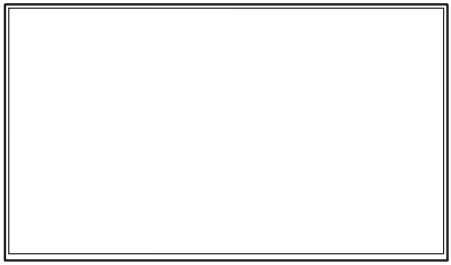

[Front]

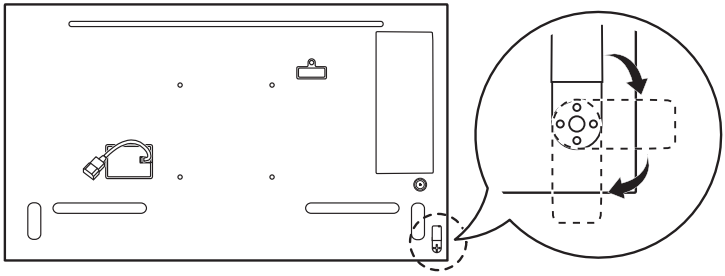

[Rear]

Landscape

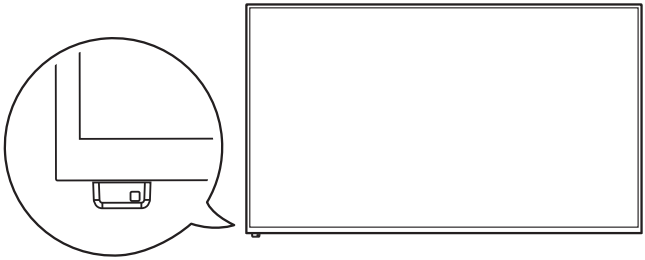

[Front]

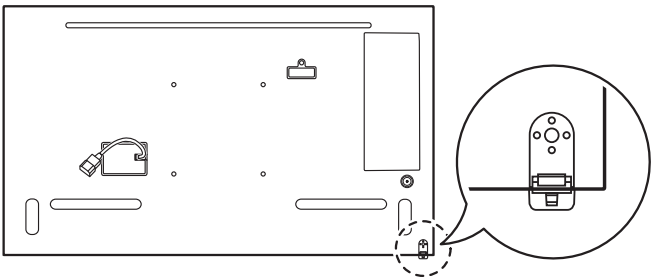

[Rear]

Portrait

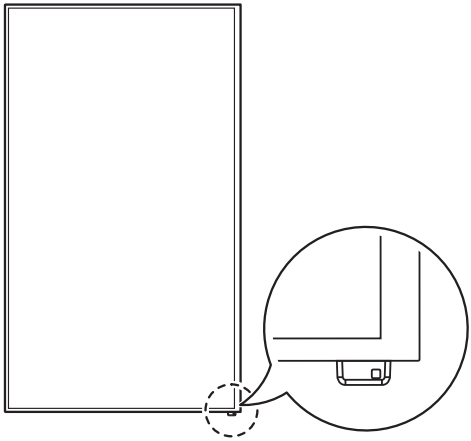

[Front]

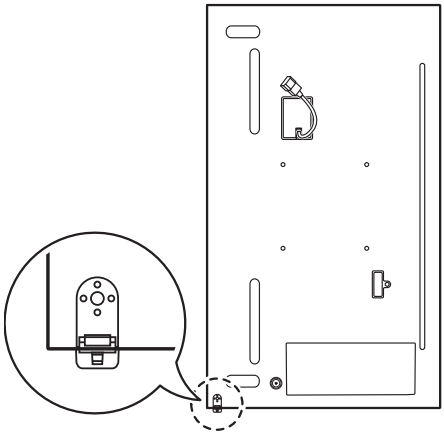

[Rear]

Portrait Layout

When installing in a portrait layout, rotate the monitor counterclockwise 90 degrees (when facing the screen).

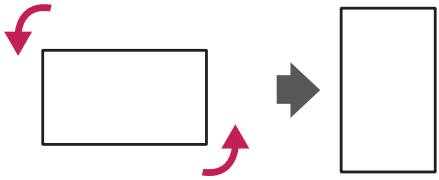

Using Kensington Lock

(This is not available for all models.)

The Kensington security system connector is located at the back of the monitor. For more information on installation and use of this system, refer to the manual provided with the Kensington security system or visit *http://www.kensington.com*.

Connect the Kensington security system cable between the monitor and a table.

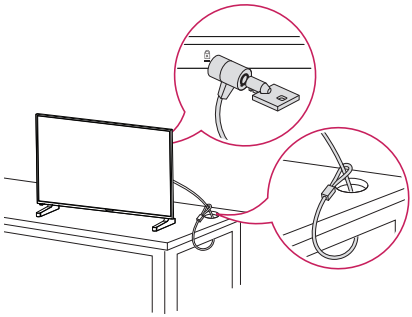

NOTE

- The Kensington security system is optional. You can obtain additional accessories from most electronics retail stores.
- The illustration shows a general example of installation and may look different from the actual product.

Assembling the Memory Cover

Assemble the cover with a screw as illustrated to prevent the USB memory from theft.

1

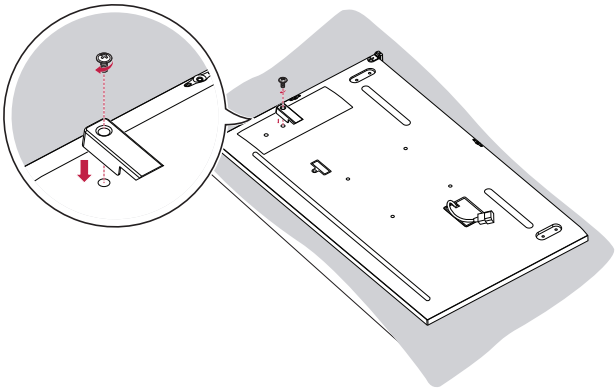

Installing on a Wall

For proper ventilation, allow a clearance of 100 mm on each side and from the wall. Detailed installation instructions are available from your dealer, see the optional Tilt Wall Mounting Bracket Installation and Setup Guide.

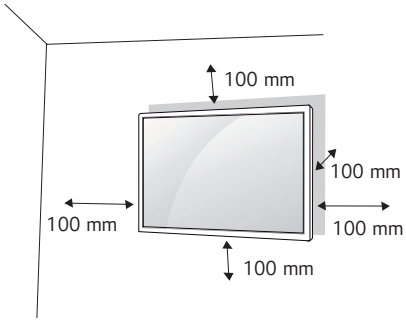

To install your monitor on a wall, attach a wall mounting bracket (optional part) to the back of the monitor.

Make sure that the wall mounting bracket is securely fixed to the monitor and to the wall.

1. Use only screws and wall mounting brackets that conform to VESA standards.
2. Screws which are longer than standard length may damage the inside of the monitor.
3. A non-VESA standard screw may damage the product and cause the monitor to fall. LG Electronics is not liable for any accidents related to the use of non-standard screws.
4. Please use VESA standard as below.

- 785 mm and above

  * Fixing screws: Diameter 6.0 mm x Pitch 1.0 mm x Length 12 mm

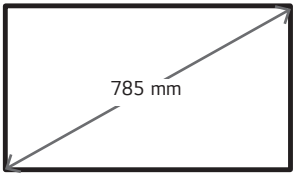

CAUTION

- Disconnect the power cord before moving or installing the monitor to avoid risk of electric shock.
- If you install the monitor on a ceiling or slanted wall, it may fall and result in injury. Use an authorized LG wall mount and contact your local dealer or qualified personnel to assist with the installation.
- Do not over tighten the screws as this may damage the monitor and void your warranty.
- Use only screws and wall mounting brackets that meet the VESA standard. Any damage or injuries caused by misuse or use of improper accessories are not covered by the warranty.

NOTE

- The wall mount kit includes the installation guide and all necessary parts.
- The wall mounting bracket is optional. You can obtain additional accessories from your local dealer.
- The length of screws required may differ depending on the wall mount. Be sure to use the correct length.
- For more information, please refer to the guide provided with the wall mount.
- Tilt installation of up to 30 degrees facedown is supported. (in conditions within 30 °C temperature, 50 % humidity)

REMOTE CONTROL

The descriptions in this manual are based on the buttons on the remote control. Please read this manual carefully to use the monitor correctly. To install batteries, open the battery cover, place batteries (1.5 V AAA) matching ⊕ and ⊖ terminals to the labels inside the compartment, and close the battery cover. To remove the batteries, perform the installation actions in reverse. The illustrations may differ from the actual accessories.

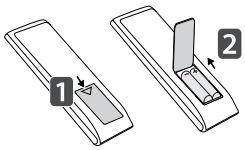

⚠ CAUTION

- Do not mix old and new batteries, as this may damage the remote control.
- Be sure to point the remote control toward the remote control sensor on the monitor.
- Some features of the remote control may not be supported in certain models.
- The product's internal and external batteries should not be exposed to excessive heat such as direct sunlight, fire, or the like.

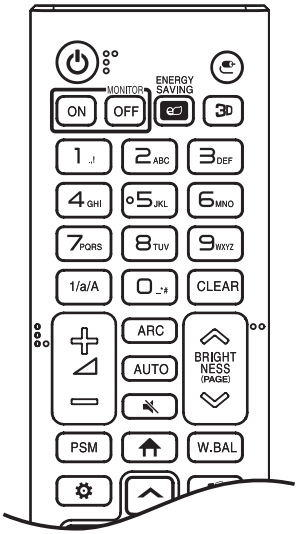

(POWER) Turns the monitor on or off.

MONITOR ON Turns the monitor on.

MONITOR OFF Turns the monitor off.

ENERGY SAVING Adjusts the brightness of the picture to reduce energy consumption.

(INPUT) Selects the input mode.

3D This function is not supported.

Number and Alphabet buttons Enters numerical or alphabetical characters depending upon the setting.

1/a/A Toggles between numerical and alphabetical.

CLEAR Deletes the entered numerical or alphabetical character.

(Volume Up/Down Button) Adjusts the volume.

ARC Selects the Aspect Ratio mode.

AUTO Automatically adjusts picture position and minimizes image instability (available for RGB input only).

(MUTE) Mutes all sounds.

BRIGHTNESS Adjusts the brightness of the display.

PAGE function is not supported in this model.

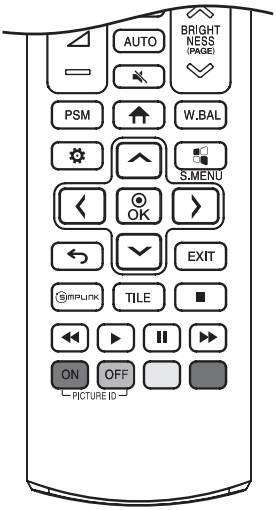

PSM Selects the Picture Mode.

(HOME) Activates the Launcher.

W.BAL Enters the White Balance menu.

(SETTINGS) Accesses the main menus or saves your input and exit menus.

S.MENU This function is not supported.

(Navigation Buttons) Scrolls through menus or options.

OK Selects menus or options and confirms your input.

(BACK) Allows you to move back one step in the user interaction function.

EXIT Quit all OSD tasks and applications.

SIMPLINK Allows you to control various multimedia devices to enjoy multimedia simply by using the remote control through the SimpLink menu.

TILE Selects the TILE Mode.

PICTURE ID ON/OFF When the Picture ID number matches the Set ID number, you can control whichever monitor you want in multi-display format.

USB Menu Control Buttons Controls media playback.

MAKING CONNECTIONS

You can connect various external devices to your monitor. Change the input mode and select the external device you want to connect. For more information about external device connections, see the user manual provided with each device.

Connecting to a PC

Some of the cables are not provided. This monitor supports the Plug and Play* feature.

* Plug and Play: a feature that enables a PC to recognize devices attached by the user without device configuration or user intervention when powering up.

External Device Connection

Some of the cables are not provided. Connect a HD receiver, DVD, or VCR player to the monitor and select an appropriate input mode.

For the best picture and sound quality, connecting external devices to your monitor using HDMI cables is recommended.

NOTE

- For the best image quality, using the monitor with HDMI connection is recommended.
- To comply with the specifications of the product, use a shielded interface cable with ferrite core, such as a DVI-D/HDMI cable.
- If you turn the monitor on when the set is cold, the screen may flicker. This is normal.
- Sometimes red, green, or blue spots may appear on the screen. This is normal.
- Use a High Speed HDMI®/™ cable (shorter than 3 meters).
- Use a certified cable with the HDMI logo attached. If you do not use a certified HDMI cable, the screen may not display or a connection error may occur.
- Recommended HDMI Cable Types
  - High Speed HDMI®/™ Cable
  - High Speed HDMI®/™ Cable with Ethernet
- If you cannot hear any sound in HDMI mode please check your PC settings. Some PCs require you to manually change the default audio output to HDMI.
- If you want to use HDMI-PC mode, you must set your PC/DTV to PC mode.
- You may experience compatibility issues if you use HDMI-PC mode.
- Make sure the power cable is disconnected.
- If you connect a gaming device to the monitor, use the cable provided with the gaming device.

CAUTION

- Connect the signal input cable and tighten it by turning the screws clockwise.
- Do not press the screen with your finger for a prolonged period as this may result in temporary distortion on the screen.
- Avoid displaying static images on the screen for a long period of time to prevent retention. Use a screensaver if possible.
- A wireless communication device near your monitor can affect the image.

Using the Input List

(HOME) →

- HDMI 1 → HDMI2 → HDMI3

Connecting Multiple Monitors

To use multiple monitors connected to each other, connect the end of the signal input cable to the OUT connection in one monitor and connect the other end to the IN connection of the other monitor.

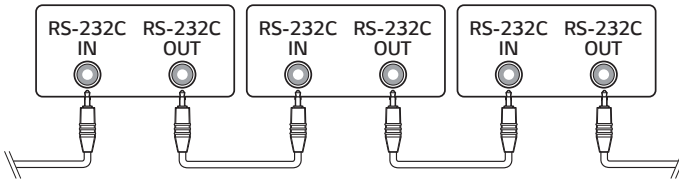

NOTE

- If the signal cable connecting the product to your PC is too long, make sure to use a booster or optical cable.

TROUBLESHOOTING

» Each model may have different points to check.
» For information on your PC settings, refer to the Windows Help.

Issues Related to Use

- The power won't turn on.
  - Check if the power cord is correctly plugged into the power outlet.
  - Try turning the power on after disconnecting the AC adapter and cleaning the contacting port.
- The 'Unknown Product' message appears when the product is connected.
  - Check if the driver of PC(graphics card) has been installed.
  - Check if the plug and play function is supported by the PC(graphics card) user manual.

Issues Related to Screen (Video)

- A message saying 'No signal' or 'Invalid Format' appears.
  - The signal cable is not connected between the PC and the product, or the cable connection status is unstable. Check the signal cable.
  - Access the input menu to check the input signal.
  - The signal from the PC (Graphics card) is out of the vertical or horizontal frequency range of the product. Adjust the frequency range by referring to the specifications in this manual.
- The position of the screen is incorrect.
  - Check if the graphics card resolution and frequency are supported by the product. If the frequency exceeds the supported range, use PC settings to set the resolution to the recommended value.
  - D-Sub analog signal - Press the **AUTO** button in the remote control to automatically select the optimal screen status that fits into the current mode. If the adjustment is not satisfactory, adjust the display settings manually in the OSD menu.
- The screen is displayed abnormally.
  - Connect the signal cable that matches with the source input signal.

- Images are flickering or fluttering on the screen.
  - If you turn the monitor on when it is cold, the screen may flicker. This is normal.
  - Make sure that the current resolution and frequency settings of the graphics card are supported by the monitor.
- Stripes appear in the background.
  - D-Sub analog signal - Press the **AUTO** button in the remote control to automatically select the optimal screen status that fits into the current mode. If the adjustment is not satisfactory, adjust the display settings manually in the OSD menu.
- Horizontal noise appears or the characters look blurred.
  - D-Sub analog signal - Press the **AUTO** button in the remote control to automatically select the optimal screen status that fits into the current mode. If the adjustment is not satisfactory, adjust the display settings manually in the OSD menu.

Issues Related to Screen (Colour)

- Screen has poor colour resolution (16 colours).
  - Use PC settings to set the colour to 24 bits (True Colour) or above.
- Screen colour is unstable or mono-coloured.
  - Check the connection status of the signal cable. Or, re-insert the PC graphics card.
- Black spots or bright spots appear on the screen.
  - Some pixels (red, green, blue, black) are visible on the screen due to the unique characteristics of the display panel. This is not a malfunction of the product.
- The screen's brightness seems dark.
  - Adjust brightness and contrast again.
  - Backlight may need repair.

Issues Related to Sound

- There is no sound output.
  - See if the audio cable is connected properly.
  - Adjust the volume of the product or external device.
  - See if the sound is set properly.
- Sound is too dull.
  - Select the appropriate equalizer sound.
- Sound is too low.
  - Adjust the volume of the product or external device.
- For some models, you will need to purchase external speakers separately since they do not have speakers built-in.

Other Issues

- The power suddenly turned off.
  - Check if the auto-off function is activated on the settings related time.
  - Power source has not being supplied properly. See if the product power cord is connected properly.
  - Check the power control settings.

Image sticking

- After-image appears when the product is turned off.
  - If you use a fixed image for a long time, the pixels may be damaged. Use the screen-saver function.
  - When a dark image is displayed on the screen after an image with high contrast (black and white or gray), this may cause image sticking. This is normal for display products.
- When the LCD panel displays a static image for an extended period of time, it can cause a voltage difference between the electrodes that operate the liquid crystals. When the voltage difference between the electrodes builds up over time, liquid crystals have a tendency to remain aligned in one direction. During this process, a previously displayed image remains visible. This phenomenon is referred to as image sticking.
- Image sticking does not occur when using constantly changing images but may occur when using a fixed image for an extended period of time. Therefore, it is recommended that you use the instructions below to decrease the likelihood of image sticking occurring when using a fixed image. It is recommended that you change the screen at least once every 12 hours at the very minimum; if done more frequently, the prevention of image sticking is more effective.
- Recommended operating conditions

1 Change the background and the character colours using the same time interval.
  - When changing colours, using complementary colours helps to prevent image sticking.



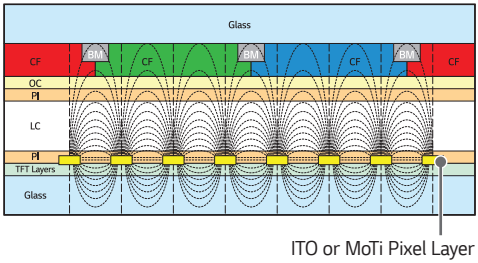

2 Change the image using the same time interval.
  - Make sure that the characters or images before changing the image remain in the same location after changing the image.

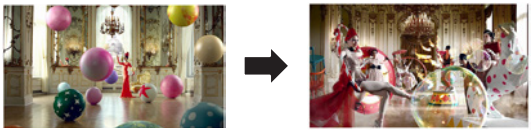

PRODUCT SPECIFICATIONS

The product specifications below may be changed without prior notice due to upgrade of product functions.
" ~ " refers to alternating current (AC), and " ⎓ " refers to direct current (DC).

LCD screen	Screen type	Thin Film Transistor (TFT) Liquid Crystal Display (LCD) Screen
Video signal	Maximum resolution	HDMI1,2,3 : 3840 x 2160 @ 60 Hz - This may not be supported on some OS or graphics card types.
	Recommended resolution	HDMI1,2,3 : 3840 x 2160 @ 60 Hz - This may not be supported on some OS or graphics card types.
	Horizontal frequency	HDMI1,2,3 (PC) : 30 kHz to 136 kHz
	Vertical frequency	HDMI1,2,3 (PC) : 58 Hz to 62 Hz
	Synchronization	Separate Sync, Digital
Input/ Output ports		HDMI IN 1, HDMI IN 2, HDMI IN 3, RS-232C IN/OUT, LAN, IR & LIGHT SENSOR, USB 2.0 IN, AUDIO OUT
Embedded battery		Applied
Environmental Conditions	Operating Temperature Operating Humidity	0 ℃ to 40 ℃ 10 % to 80 %
	Storage Temperature Storage Humidity	-20 ℃ to 60 ℃ 5 % to 85 %
Audio	Input Sensitivity	0.7 Vrms

43UM3DG

LCD screen	Pixel pitch	0.0817 mm (H) x 0.2451 mm (V)
Power	Rated power	AC 100-240 V ~ 50/60 Hz 1.2 A
	Power consumption	On Mode : 70 W (Typ.) Sleep Mode : ≤ 0.5 W Standby Mode : ≤ 0.5 W
Dimensions (Width x Height x Depth) / Weight	Head	962.5 mm x 556.8 mm x 39.9 mm / 11.2 kg
	Head + Stand	962.5 mm x 613.1 mm x 290.0 mm / 11.8 kg

49UM3DG

LCD screen	Pixel pitch	0.27963 mm (H) x 0.27963 mm (V)
Power	Rated power	AC 100-240 V ~ 50/60 Hz 1.6 A
	Power consumption	On Mode : 85 W (Typ.) Sleep Mode : ≤ 0.5 W Standby Mode : ≤ 0.5 W
Dimensions (Width x Height x Depth) / Weight	Head	1098.6 mm x 633.3 mm x 39.9 mm / 15.4 kg
	Head + Stand	1098.6 mm x 694.3 mm x 290.0 mm / 16.0 kg

55UM3DG

LCD screen	Pixel pitch	0.315 mm (H) x 0.315 mm (V)
Power	Rated power	AC 100-240 V ~ 50/60 Hz 1.7 A
	Power consumption	On Mode : 95 W (Typ.) Sleep Mode : ≤ 0.5 W Standby Mode : ≤ 0.5 W
Dimensions (Width x Height x Depth) / Weight	Head	1234.4 mm x 709.7 mm x 39.9 mm / 19.0 kg
	Head + Stand	1234.4 mm x 770.7 mm x 290.0 mm / 19.6 kg

65UM3DG

LCD screen	Pixel pitch	0.372 mm (H) x 0.372 mm (V)
Power	Rated power	AC 100-240 V ~ 50/60 Hz 1.9 A
	Power consumption	On Mode : 105 W (Typ.) Sleep Mode : ≤ 0.5 W Standby Mode : ≤ 0.5 W
Dimensions (Width x Height x Depth) / Weight	Head	1453.3 mm x 832.8 mm x 39.9 mm / 28.2 kg
	Head + Stand	1453.3 mm x 893.1 mm x 290.0 mm / 28.8 kg

Wireless module(LGSBWAC72) Specifications	
Wireless LAN (IEEE 802.11a/b/g/n/ac)	
Frequency range (MHz)	**Output power (Max.) (dBm)**
2400 to 2483.5	14
5150 to 5725	16.5
5725 to 5850 (Not for EU)	11.5
Bluetooth	
Frequency range (MHz)	**Output power (Max.) (dBm)**
2400 to 2483.5	8.5

- As band channels can vary per country, the user cannot change or adjust the operating frequency. This product is configured for the regional frequency table.
- For consideration of the user, this device should be installed and operated with a minimum distance of 20 cm between the device and the body.
- "IEEE 802.11ac" is not available in all countries.

(Only Nigeria)

Connection and use of this communications equipment is permitted by the Nigerian Communications Commission

(Only HongKong)

Wireless module(LGSBWAC72) Specifications	
Wireless LAN (IEEE 802.11a/b/g/n/ac)	
Frequency range (MHz)	**Output power (Max.) (dBm)**
2400 to 2483.5	14
5150 to 5350	16.5
5725 to 5850	11.5
Bluetooth	
Frequency range (MHz)	**Output power (Max.) (dBm)**
2400 to 2483.5	8.5

- As band channels can vary per country, the user cannot change or adjust the operating frequency. This product is configured for the regional frequency table.
- For consideration of the user, this device should be installed and operated with a minimum distance of 20 cm between the device and the body.

HDMI (PC) Support mode

Resolution	Horizontal frequency (kHz)	Vertical frequency (Hz)	Remark
800 x 600	37.879	60.317	
1024 x 768	48.363	60	
1280 x 720	44.772	59.855	
1280 x 1024	63.981	60.02	
1680 x 1050	65.29	59.954	
1920 x 1080	67.5	60	
3840 x 2160	67.5	30	
3840 x 2160	135	60	

HDMI (DTV) Support Mode

Resolution	Horizontal frequency (kHz)	Vertical frequency (Hz)	Remark
480/60p	31.5	60	
576/50p	31.25	50	
720/50p	37.5	50	
720/60p	45	60	
1080/50i	28.1	50	
1080/60i	33.75	60	
1080/50p	56.25	50	
1080/60p	67.432	59.94	
1080/60p	67.5	60	
2160/30p	67.5	30	
2160/50p	112.5	50	
2160/60p	135	60	

NOTE

- Horizontal frequency: The horizontal interval is the time taken to display one horizontal line. When 1 is divided by the horizontal interval, the number of horizontal lines displayed every second can be tabulated as the horizontal frequency. The unit is kHz.
- Vertical frequency: The product display functions by the screen image changing dozens of times every second like a fluorescent lamp. The vertical frequency or refresh rate is the number of image displays per second. The unit is Hz.

LICENSES

Supported licenses may differ by model. For more information of the licenses, visit *www.lg.com*.

HIGH-DEFINITION MULTIMEDIA INTERFACE

The terms HDMI, HDMI High-Definition Multimedia Interface, and the HDMI Logo are trademarks or registered trademarks of HDMI Licensing Administrator, Inc.

Manufactured under license from Dolby Laboratories. Dolby, Dolby Vision, Dolby Audio, Dolby Atmos, and the double-D symbol are trademarks of Dolby Laboratories.

For DTS patents, see *http://patents.dts.com*. Manufactured under license from DTS Licensing Limited. DTS, the Symbol, & DTS and the Symbol together, DTS 2.0 Channel, DTS 2.0+Digital Out, DTS-HD, and DTS Virtual:X are registered trademarks or trademarks of DTS, Inc. in the United States and/or other countries. © DTS, Inc. All Rights Reserved.

HEVC Advance™
Covered by Patents at patentlist.hevcadvance.com





This product qualifies for ENERGY STAR®.
Changing the factory default configuration and settings or enabling certain optional features and functionalities may increase energy consumption beyond the limits required for ENERGY STAR® certification.
Refer to ENERGYSTAR.gov for more information on the ENERGY STAR® program.

The model and serial number of the product are located on the back and on one side of the product. Record them below in case you ever need service.

MODEL

SERIAL NO.

Temporary noise is normal when powering ON or OFF this device.