LG
Life's Good

ENGLISH

SIMPLE MANUAL

Mini Hi-Fi System

To view the instructions of advanced features,
visit **http://www.lg.com** and then download Owner's Manual.
Some of the content in this manual may differ from your unit.

MODEL
CM5760



www.lg.com

CM5760-AB_DPERLLB_SIM_ENG_3003.indd 1 2016-05-24 1:48:34



Front Panel

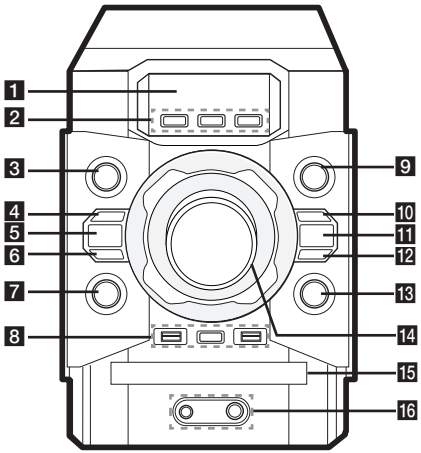

1 Display window

2 KEY CHANGER (♯/♭)
Changes the key to suit your vocal range.
VOICE CANCELLER
You can enjoy the function while playing the music, by reducing singer vocal of music in the various source.

3 ⏻/I (Standby/On)
Switches the unit ON or OFF.

4 □ (Stop)
Stops playback or recording.

5 AUTO DJ
Selects the AUTO DJ mode.

6 I<< (Skip/Search)
- Searches backward.
- Skips to the previous track/file.
- Selects the radio stations.

7 LIGHTING / MIC VOLUME
- Turns on/off the lighting effects.
- Press and hold to enter microphone adjustment mode.

8 USB1/USB2
Plays the audio files by connecting the USB device.
USB REC / DEMO
- Records to USB.
- Shows demo mode.

9 F (Function) / WIRELESS LINK
- Selects the function and input source.
- Press and hold for 3 seconds to select WIRELESS PARTY LINK mode.

10 >/II (Play/Pause) STEREO / MONO
- Starts or pauses playback.
- Selects Stereo/Mono.

11 REGION EQ / BASS BLAST
- Chooses region equalizer.
- Press and hold to select BASS effect directly.

12 >>I (Skip/Search)
- Searches forward.
- Skips to the next track/file.
- Selects the radio stations.

13 ⏏ (Open/Close) EJECT
Opens or closes the disc tray.

14 MASTER VOLUME
- Adjusts volume of speaker.
- Adjusts volume of microphone.

15 Disc tray

16 PORT. (Portable) IN jack
Connect a portable device.
MIC. (Microphone) jack
Connect a microphone.

Rear Panel

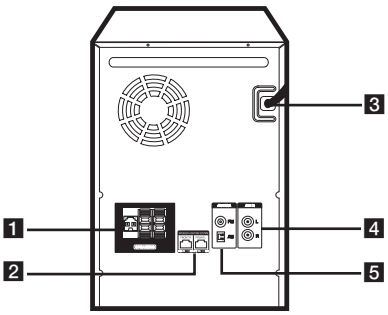

1 SPEAKERS terminal/cord

2 SPEAKER LIGHTING SYSTEM

3 Power cord

4 AUX IN (L/R)

5 ANTENNA (FM/AM)

Speaker Connection

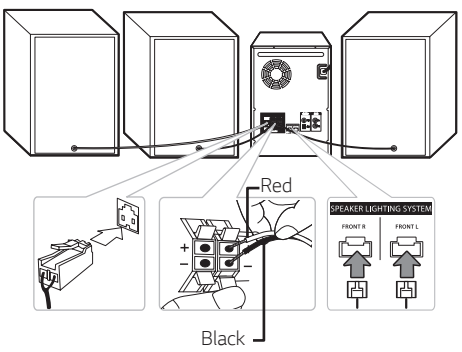

Additional Information

Specifications

Power Requirements	Refer to the main label on the unit.
Power Consumption	Refer to the main label on the unit.
	Networked standby : 0.5 W (If all network ports are activated.)
Dimensions (W x H x D)	Approx. 207 mm x 282 mm x 261 mm
Net Weight	Approx. 3.5 kg
Bus Power Supply (USB)	5 V ⎓ 500 mA
Total Output (RMS)	1,100 W

Design and specifications are subject to change without notice.

How to disconnect the wireless network connection or the wireless device

Turn off the unit by pressing the power button for more than 5 seconds.

Replacement of battery

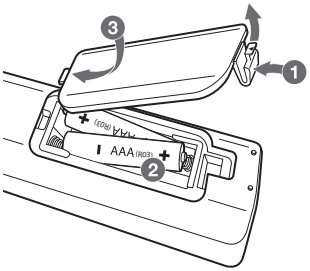

About Ferrite Core (Optional)

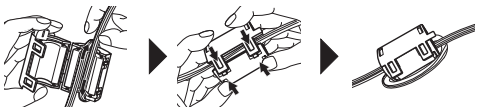

Wind SPEAKER LIGHTING SYSTEM cables around the ferrite core once.

Controller App

Download the **Music Flow Bluetooth** App to your device.

LG Sound Sync (Wireless)



For more information, download the online owner's manual. **http://www.lg.com**



CM5760-AB_DPERLLB_SIM_ENG_3003.indd 4 2016-05-24 1:48:35