LG
Life's Good

OWNER'S MANUAL

Mini Hi-Fi Audio

Please read this manual carefully before operating your set and retain it for future reference.

MODEL
OK75

MFL70422832

www.lg.com

Copyright © 2018 LG Electronics Inc. All Rights Reserved.

1807_Rev02

Safety Information

CAUTION: TO REDUCE THE RISK OF ELECTRIC SHOCK DO NOT REMOVE COVER (OR BACK) NO USER-SERVICEABLE PARTS INSIDE REFER SERVICING TO QUALIFIED SERVICE PERSONNEL.

This lightning flash with arrowhead symbol within an equilateral triangle is intended to alert the user to the presence of uninsulated dangerous voltage within the product's enclosure that may be of sufficient magnitude to constitute a risk of electric shock to persons.

The exclamation point within an equilateral triangle is intended to alert the user to the presence of important operating and maintenance (servicing) instructions in the literature accompanying the product.

WARNING: TO PREVENT FIRE OR ELECTRIC SHOCK HAZARD, DO NOT EXPOSE THIS PRODUCT TO RAIN OR MOISTURE.

CAUTION: The apparatus should not be exposed to water (dripping or splashing) and no objects filled with liquids, such as vases, should be placed on the apparatus.

WARNING: Do not install this equipment in a confined space such as a book case or similar unit.

CAUTION: Do not use high voltage products around this product. (ex. Electrical swatter) This product may malfunction due to electrical shock.

CAUTION: This product employs a Laser System. To ensure proper use of this product, please read this owner's manual carefully and retain it for future reference. Shall the unit require maintenance, contact an authorized service center.
Use of controls, adjustments or the performance of procedures other than those specified herein may result in hazardous radiation exposure. To prevent direct exposure to laser beam, do not try to open the enclosure.

CAUTION: Do not block any ventilation openings. Install in accordance with the manufacturer's instructions.
Slots and openings in the cabinet are provided for ventilation and to ensure reliable operation of the product and to protect it from over heating. The openings shall be never be blocked by placing the product on a bed, sofa, rug or other similar surface. This product should not be placed in a built-in installation such as a bookcase or rack unless proper ventilation is provided or the manufacturer's instruction has been adhered to.

NOTICE: For safety marking information including product identification and supply ratings, please refer to the main label on the bottom or the other surface of the product.

CAUTION concerning the Power Cord

The Power Plug is the disconnecting device. In case of an emergency, the Power Plug must remain readily accessible.

Check the specification page of this owner's manual to be certain of the current requirements.

Do not overload wall outlets. Overloaded wall outlets, loose or damaged wall outlets, extension cords, frayed power cords, or damaged or cracked wire insulation are dangerous. Any of these conditions could result in electric shock or fire. Periodically examine the cord of your device, and if its appearance indicates damage or deterioration, unplug it, discontinue use of the device, and have the cord replaced with an exact replacement part by an authorized service center. Protect the power cord from physical or mechanical abuse, such as being twisted, kinked, pinched, closed in a door, or walked upon. Pay particular attention to plugs, wall outlets, and the point where the cord exits the device.

This device is equipped with a portable battery or accumulator.

How to Safely remove the batteries or the battery pack from the equipment: To Remove the old batteries or battery pack, follow the assembly steps in reverse order. To prevent contamination of the environment and bring on possible threat to human and/or animal health, the old batteries or the battery pack must be put in an appropriate container at designated collection points. Do not dispose of batteries or battery pack together with other waste. It is recommended that you use local, free reimbursement systems batteries or battery packs, (may not be available in your area). The batteries or the battery pack should not be exposed to excessive heat such as sunshine, fire or the like.

CAUTION: No naked flame sources, such as lighted candles, should be placed on the apparatus.

Symbols

~	Refers to alternating current (AC).
⎓	Refers to direct current (DC).
⧈	Refers to class II equipment.
⏻	Refers to stand-by.
I	Refers to "ON" (power).
ϟ	Refers to dangerous voltage.

Table of Contents

1 Getting Started

2 Safety Information
6 Unique Features
7 Playable file Requirement
7 – Music file requirement
7 – Compatible USB Devices
7 – USB device requirement
8 Remote control
10 Top panel
12 Front panel / Rear panel
13 Carrying the unit

2 Connecting

14 AC Power Cord Connection
14 Optional Equipment Connection
14 – AUX IN Connection
15 – PORT. IN Connection
15 – Listening to music from your portable player or external device
16 – OPTICAL IN Connection
16 LG Sound Sync
18 – USB Connection
18 – Antenna Connection

3 Operating

19 Basic Operations
19 – CD/USB Operations
19 – Auto Play
20 – Selecting a folder and an MP3/WMA file
21 – Deleting a file/folder or format
21 Playback Effect
21 – DJ EFFECT
21 – DJ SCRATCH
22 – AUTO DJ
22 – DJ PAD
23 – DJ LOOP
23 – PARTY ACCELERATOR
23 – PARTY KICK STARTER
24 Using BLUETOOTH® wireless technology
24 – Listening to music stored on the Bluetooth devices
27 Using the Music Flow Bluetooth App
27 – About “Music Flow Bluetooth” App
27 – Install “Music Flow Bluetooth” App onto Your Bluetooth Device
28 – Activate Bluetooth with “Music Flow Bluetooth” App
29 Radio Operations
29 – Listening to the radio
29 – Improving poor FM reception
29 – Presetting the Radio Stations
29 – Deleting all the saved stations
30 – Seeing information about a Radio station

31 Sound adjustment
31 – Setting the sound mode
31 – Setting the USER EQ
32 Advanced Operations
32 – Recording to USB
34 – JUKE BOX Playback
35 Other Operations
35 – Turn off the sound temporarily
35 – DRC (Dynamic range control)
35 – CHILDSAFE Mode
36 – DEMO
36 – Resume stop
36 – Using your TV remote control
37 – Using Microphone
39 – LIGHTING
40 – Sleep Timer Setting
40 – Dimmer
40 – Auto power down
40 – AUTO POWER On
41 – Auto function change
42 Setting the Clock
42 – Setting the Clock through "Music Flow Bluetooth" App
42 – Using your player as an alarm clock
43 WIRELESS PARTY LINK Connection

4 Troubleshooting

45 Troubleshooting
45 – General

5 Appendix

47 General specifications
48 Trademarks and licenses
49 Maintenance
49 – Notes on Discs
49 – Handling the Unit

Unique Features

BLUETOOTH®

Listens to music stored on your **Bluetooth** device.

Portable In

Listens to music from your portable device. (MP3, Notebook, etc.)

Optical In

Listens to music from your optical device.

Playback effects

Listens to music with various sound and playback effects.

USB Direct Recording

Records music to your USB device.

Music Flow Bluetooth

Music Flow Bluetooth is an app designed to let you take control of some of LG's latest audio devices. (Page 27-28)

LG Sound Sync

Controls volume level of this unit by the remote control of your LG TV that is compatible with LG Sound Sync.

Playable file Requirement

Music file requirement

MP3/WMA file compatibility with this unit is limited as follows.

- Sampling frequency : within 32 to 48 kHz (MP3), within 32 to 48 kHz (WMA)
- Bit rate : within 32 to 320 kbps (MP3), 40 to 192 kbps (WMA)
- Maximum files : Data CD : 999 / USB : 2,000
- Maximum folders : Data CD : 99 / USB : 200
- File extensions : ".mp3"/ ".wma"
- Certain MP3/WMA files may not be played depending on the type or format of the file.
- CD-ROM file format : ISO 9660/ JOLIET
- We recommend that you use Easy-CD Creator, which creates an ISO 9660 file system.
- A protected file by DRM (Digital rights management) cannot be played on the unit.
- The DTS disc is not supported.

You have to set the disc format option to [Mastered] in order to make the discs compatible with the LG players when formatting rewritable discs. When setting the option to Live File System, you cannot use it on LG players.

(Mastered/Live File System : Disc format system for Windows Vista)

Compatible USB Devices

- MP3 Player : Flash type MP3 player.
- USB Flash Drive :
  Devices that support USB2.0 or USB1.1.
- The USB function of this unit does not support all USB devices.

USB device requirement

- Devices which require additional program installation when you have connected it to a computer, are not supported.
- Do not extract the USB device while in operation.
- For a large capacity USB, it may take longer than a few minute to be searched.
- To prevent data loss, back up all data.
- If you use a USB extension cable or USB hub, the USB device is not recognized.
- Using NTFS file system is not supported. (Only FAT(16/ 32) file system is supported.)
- This unit recognizes up to 2,000 files.
- External HDD, Card readers, Locked devices, or hard type USB devices are not supported.
- USB port of the unit cannot be connected to PC. The unit cannot be used as a storage device.
- Some USB may not work with this unit.

Remote control

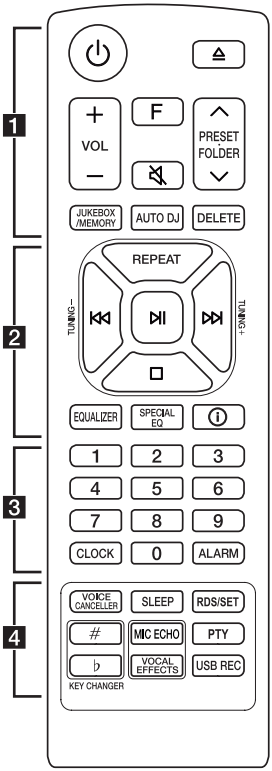

Replacement of battery

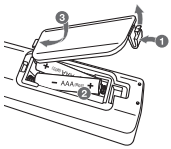

Remove the battery cover on the rear of the remote control, and insert the battery with ⊕ and ⊖ matched correctly.

1

⏻ (Standby) **:** Turns the power on or off.

⏏ (Open/Close) **:** Opens and closes the disc tray.

VOL (Volume) **+/- :** Adjusts speaker volume.

F (Function) **:** Selects the function and input source.

Input source / Function	Display
Disc	CD
USB	USB1 / USB2
Optical	OPTICAL
LG Sound Sync (Optical)	LG OPT
AUX input	AUX
Portable input	PORTABLE
Bluetooth	BT
LG Sound Sync (Wireless)	LG TV
Radio	FM

🔇 (Mute)**:**

- Mutes the sound.
- Controls this unit using TV remote. (Page 36)

PRESET·FOLDER ∧/∨ :

- Chooses a preset number for a radio station. (Page 29)
- Searches for a folder of MP3/WMA files. When a CD/USB containing MP3/WMA files in several folders is being played, press **PRESET·FOLDER ∧/∨** to select the folder you want to play.

JUKEBOX/MEMORY :

- Stores radio stations. (Page 29)
- Selects JUKE BOX mode. (Page 34)
- Makes JUKE BOX list.

AUTO DJ : Selects the AUTO DJ mode. (Page 22)

DELETE :

- Deletes MP3/WMA files. (USB only). (Page 21)
- Deletes a song on the JUKE BOX list.
- Deletes all the saved stations.

2

REPEAT : Listens to your tracks/files repeatedly or randomly.

TUNING-/+ : Selects the radio stations.

⏮/⏭ (Skip/Search) **:**

- Skips backward or forward.
- Searches for a section within a track/file.

⏯ (Play/Pause) **:**

- Starts or pauses playback.
- Selects stereo/mono.

□ (Stop) **:**

- Stops playback.
- Cancels DELETE function.

EQUALIZER : Chooses sound impressions.

SPECIAL EQ : Chooses special equalizer.

ⓘ (Information) **:**

- Sees information about your music. An MP3 file often come with ID3 tag. The tag gives the Title, Artist, Album or Time information.
- Sees optical source information in OPTICAL mode.
- Sees **Bluetooth** device name of the unit in BT READY.
- Sees the name of connected all **Bluetooth** device in **Bluetooth** mode.
- When these units are successfully connected each other in WIRELESS PARTY LINK mode, each of connected device names appears in the each unit.

3

0 to **9** numerical buttons **:** Selects numbered tracks, files, or preset number.

CLOCK : Sets a clock and checks a time.

ALARM : With the ALARM function you can turn on CD, USB play and tuner reception at a desired time.

4

VOICE CANCELLER : You can reduce the vocal tones during music playback from various input sources.

SLEEP : Sets the system to turn off automatically at a specified time.
(Dimmer : The display window will be darkened by half.)

RDS/SET :

- RDS (Radio Data System)
- Confirms the setting.

KEY CHANGER (#/♭) : Changes the key to suit your vocal range.

MIC ECHO : Selects ECHO mode.

PTY : Searches radio stations by radio type.

VOCAL EFFECTS : Selects various vocal effects mode.

USB REC :

- Records to USB.
- To stop Recording, press and hold for 3 seconds.

Top panel

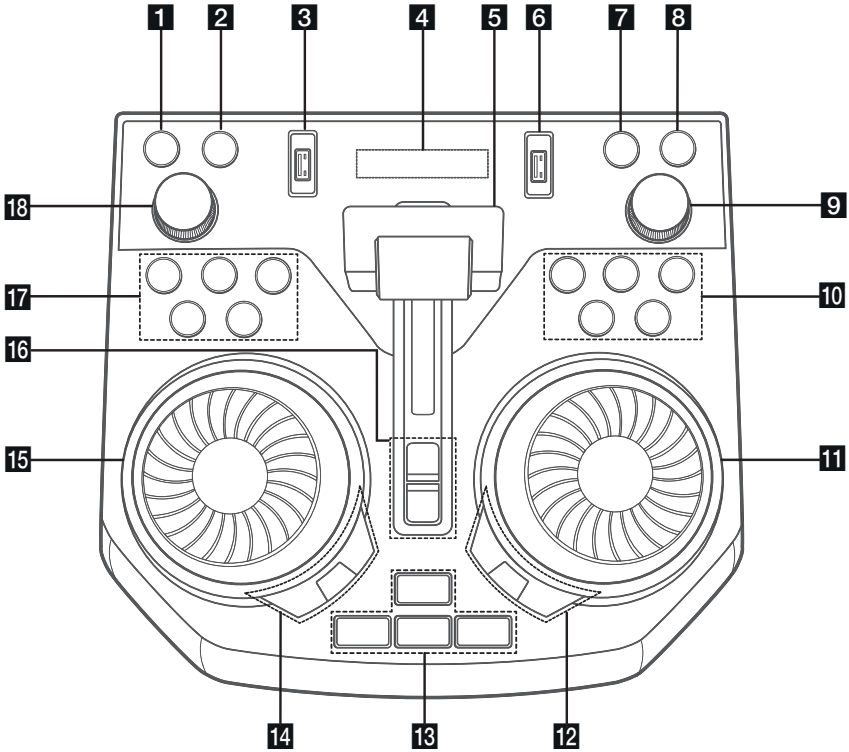

1 ⏻ (Standby)
Turns the power on or off.

2 **USB REC / DEMO**
- Records to USB.
- To stop Recording, press and hold for 3 seconds.
- In power off status, if you press **USB REC / DEMO**, show demo mode.

3 USB 1 Port
You can play sound files by connecting the USB device.

4 Display window

5 **PARTY ACCELERATOR** lever
Slide the lever to create a party atmosphere.

6 USB 2 Port
You can play sound files by connecting the USB device.

7 **F** (Function)
Selects the function and input source.

Input source / Function	Display
Disc	CD
USB	USB1 / USB2
Optical	OPTICAL
LG Sound Sync (Optical)	LG OPT
AUX input	AUX
Portable input	PORTABLE
Bluetooth	BT
LG Sound Sync (Wireless)	LG TV
Radio	FM

8 **WIRELESS LINK**
- Selects MAIN or OTHER on WIRELESS PARTY LINK mode.
- Enable or disable WIRELESS PARTY LINK mode.

9 **MASTER VOL.** (Volume) **-/+**
Adjusts speaker volume.

10 ⏮ (Skip/Search)
- Skips backward.
- Searches for a section within a track/file.
- Selects the radio stations.

⏯ (Play/Pause)
- Starts or pauses playback.
- Selects stereo/mono.

⏭ (Skip/Search)
- Skips forward.
- Searches for a section within a track/file.
- Selects the radio stations.

☐ (Stop) / **RDS**
- Stops playback or cancels DELETE function.
- Radio Data System

⏏ (Open/Close)
Opens and closes the disc tray.

11 **DJ SCRATCH / SEARCH & MULTI**
- Turns clockwise or counterclockwise to make scratch sound.
- Searches a folder or a file

12 **SPECIAL EQ / BASS BLAST** (or **BASS BLAST+**)
- Chooses special equalizer.
- Press and hold to select BASS (or BASS+) effect directly.

SEARCH
Moves to folder or file in selection mode.

OK
Selects a folder when searching a file.

13 **PARTY STARTER**
- In power off state, this function turns on the unit with Party Kick Starter sound.
- In power on state, this function mixes the music with Party Kick Starter sound.

CLUB, DRUM, USER (DJ PAD)
Selects CLUB, DRUM or USER sound effect to mix.
(If you want to use USER, you have to register a source with "Music Flow Bluetooth" app.)

1, 2, 3 (DJ PAD)
Press a desired sound pad.

14 **DJ EFFECT**
Selects a desired DJ effect.

USER EQ
Selects the equalizer created by your own.
(Page 31)

LIGHTING
Selects the lighting mode.

15 **DJ SCRATCH / LEVEL CONTROL**
- Turns clockwise or counterclockwise to make scratch sound.
- Turns clockwise or counterclockwise to control the USER EQ level.
- Adjust DJ EFFECT level.
- Selects the vocal effects.
- Selects the lighting effects.

16 **PARTY ACCELERATOR MODE**
Selects PARTY ACCELERATOR MODE.

DJ LOOP
Selects DJ LOOP mode.
(DJ LOOP mode can use during CD/USB playback.)

17 **KEY CHANGER (♭/#)**
Changes the key to suit your vocal range.

VOICE CANCELLER
You can reduce the vocal tones during music playback from various input sources.

VOCAL EFFECTS
Selects VOCAL EFFECTS mode.

MIC ECHO
Selects ECHO mode.

18 **MIC VOL.** (Microphone Volume)**-/+**
Adjust microphone volume.

Front panel / Rear panel

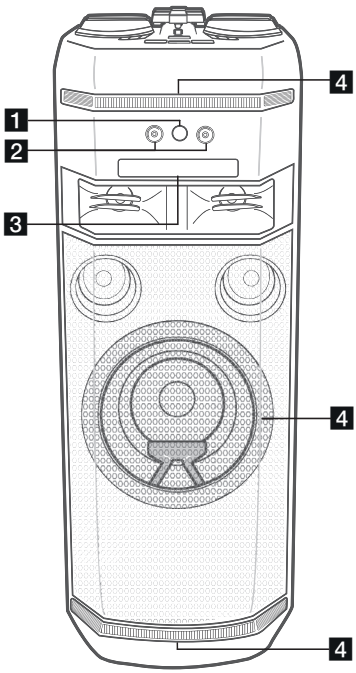

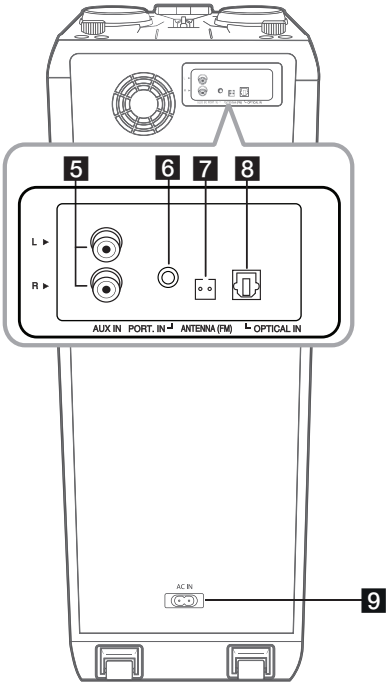

1 (Remote sensor)

2 **MIC** (Microphone) **1/2** jack

3 Disc tray

4 Lighting

Caution

Place the speaker at a safe distance from the child's reach. Otherwise it may result in the speaker falling down and causing personal injury and/or property damage.

5 **AUX IN** (L/R) :Connect an auxiliary device.

6 **PORT** (Portable).**IN** :Connect a portable device.

7 **ANTENNA** (FM)

8 **OPTICAL IN** :Connect an optical device.

9 **AC IN** socket

Caution

- Connect the power cord to wall outlet directly if possible. Or when you use an extension cable, it is highly recommended to use an extension cable of 110 V / 15 A or 230 V / 15 A, otherwise the unit may not operate properly because of the lack of power supply.
- Do not overload the extension cord with excessive electrical load.

Carrying the unit

The unit has wheels and handles so you can easily move the unit.

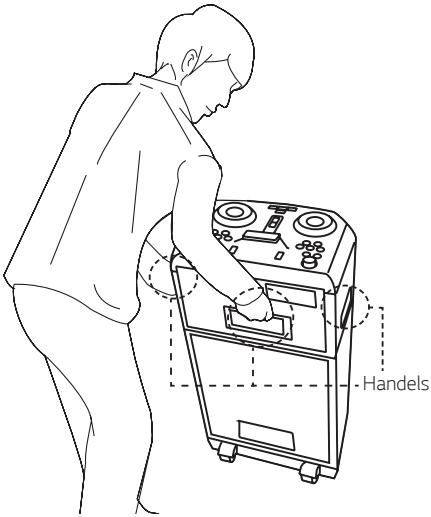

Caution

- Do not roll the unit on an unpaved road or the stairs.
- When carrying the unit, be careful not to drop it.
- Disconnect all connected cables before carrying the unit.
- Do not place the unit on anything unstable. Place the unit at a safe distance from a child's reach.
- Be careful so that the unit does not fall down. Otherwise it may result in malfunction or cause personal injury and/or property damage.

Useful functions for using the unit

Function	Description	To do	Do this
TV Remote On/Off (Page 36)	It allows you to control the volume of this unit by your TV remote control even by other company's product. Initial setting of this function was set to on.	ON	Press and hold 🔇 on the remote control for 3 seconds in Optical function.
		OFF	Press and hold 🔇 on the remote control for 3 seconds in Optical function.
BT Lock On/Off (Page 26)	It allows you to connect a **Bluetooth** device only on BT (**Bluetooth**) and LG TV functions. Initial setting of this function was set to off.	ON	Press and hold ⏯ for 5 seconds in BT (**Bluetooth**) function.
		OFF	Press and hold ⏯ for 5 seconds in BT (**Bluetooth**) function.
Auto Power On (Page 40)	It allows the unit to turn on automatically by input signals : Optical, LG TV or BT (**Bluetooth)**	ON	Turn off the unit by pressing ⏻ on the unit for 5 seconds.
		OFF	Turn off the unit by pressing ⏻ on the unit for 5 seconds.

AC Power Cord Connection

1. Connect one end of the AC power cord (included) to the **AC IN** socket.

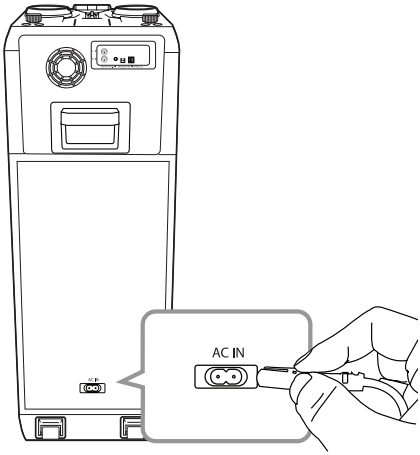

2. Plug the other end into the wall outlet.

Note

Unplug the AC power cord from the wall outlet if you do not to use for an extended period of time.

Optional Equipment Connection

AUX IN Connection

Connect an output of auxiliary device (Camcorder, TV, Player, etc) to the **AUX IN** (L/R) connector. If your device has only one output for audio (mono), connect it to the left(white) audio jack on the unit.

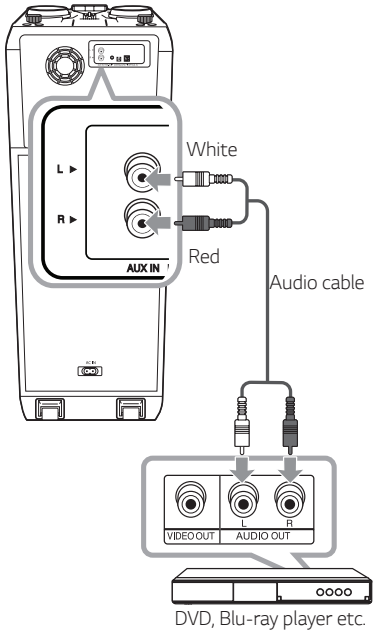

PORT. IN Connection

Connect an output (earphone or line out) of portable device (MP3 or PMP etc) to the **PORT. IN** (3.5 mm) connector.

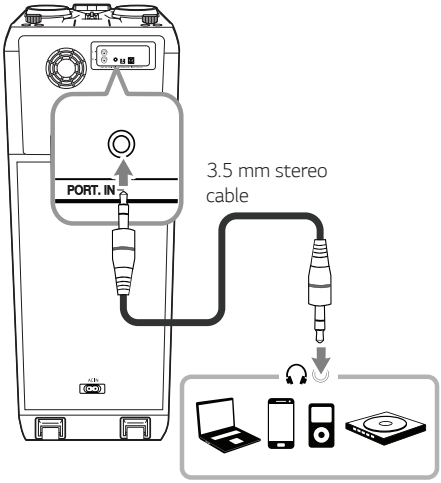

Listening to music from your portable player or external device

The unit can be used to play the music from many types of portable player or external device.

1. Connect the portable player to the **PORT. IN** connector of the unit.

   Or

   Connect the external device to the **AUX IN** connector of the unit.
2. Turn the power on by pressing ⏻.
3. Press **F** to select AUX or PORTABLE function.
4. Turn on the portable player or external device and start it playing.

Note

Automatically switches to the PORTABLE function when you connect the portable device to the **PORT. IN** connector.

OPTICAL IN Connection

1. Connect an optical output jack of external devices to the OPTICAL IN jack.

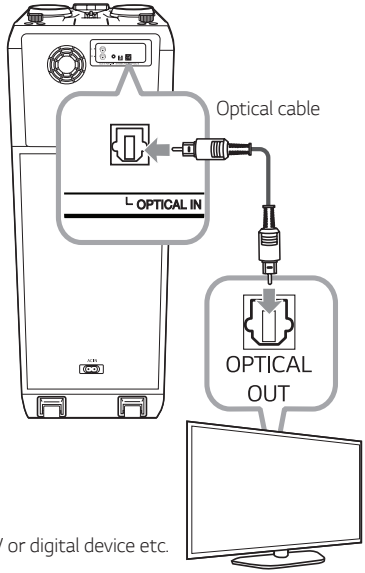

2. Press **F** until OPTICAL function is selected.

Note

- Before connecting the optical cable, be sure to remove the protection plug cover if your cable has the cover.
- You can enjoy the TV audio through the speakers of this unit. In the case of some TV models, you must select the external speaker option from the TV menu. (For details, reference your TV user manual.)
- Set up the sound output of TV to listen to the sound through this unit :
  TV setting menu → [Sound] → [TV Sound output] → [External speaker (Optical)]
- Details of TV setting menu vary depending on models of your TV.
- Playback effects and MIC function do not operate on OPTICAL or LG OPT function.

LG Sound Sync

Sound Sync Wireless

You can control some functions of this unit by your TV's remote control with LG Sound Sync. It is compatible with LG TV that supports LG Sound Sync. Make sure your TV has the LG Sound Sync logo.

Controllable function by LG TV's remote control : Volume up/down, mute

Refer to the TV's instruction manual for the details of LG Sound Sync.

LG Sound Sync with wired connection

1. Connect your LG TV to the unit by using an optical cable.
2. Set up the sound output of TV to listen to the sound through this unit :
   TV setting menu → [Sound] → [TV Sound output] → [LG Sound Sync (Optical)]
3. Turn on the unit by pressing ⏻.
4. Press **F** until OPTICAL function is selected.

   You can see "LG OPT" on the display window if connecting normally between this unit and your TV.

LG Sound Sync with wireless connection

1. Turn on the unit by pressing ⏻.
2. Press **F** until LG TV function is selected.
3. Set up the sound output of TV to listen to the sound through this unit :
   TV setting menu [Sound] → [TV Sound output] → [LG Sound Sync (Wireless)]
   "PAIRED" appears on the display window for about 3 seconds and then you can see "LG TV" on the display window if the TV and this unit are connected normally.

Note

- You can also use the remote control of this unit while using LG Sound Sync. If you use TV's remote control again, the unit synchronizes with the TV. (According to TV Specifications, the volume and mute of this unit synchronize with TV.)
- If the connection fails, check the conditions of this unit and your TV : power, function.
- Make sure of the condition of this unit and the connection in the cases below when using LG Sound Sync.
  - The unit is turned off.
  - Changing to a different function.
  - Disconnecting the wireless connection caused by interference or a distance.
  - Disconnecting the optical cable.
- The amount of time to turn off this unit is different depending on your TV.
- If you try to change the function on using the LG TV function, volume will be change according to the LG TV volume level.
- Details of TV setting menu vary depending on models of your TV.
- If you turned off the unit directly by pressing ⏻, LG Sound Sync will be disconnected.
  To use this function again, you should reconnect the TV and the unit.
- The volume may be increased when the TV and this unit is connected by LG Sound Sync. Decrease the TV volume and then connect with this unit.
- When you turn on your LG TV connected by LG Sound Sync or enter LG TV function, this unit changes the function to LG TV automatically.
- You should set the TV Sound output manually depending on the TV version.
- If you control TV volume when this unit and TV are connected by LG Sound Sync, this unit may louder the volume due to synchronizing volume with TV's.

USB Connection

Connect a USB device (or MP3 player, etc.) to the USB ports on the unit.

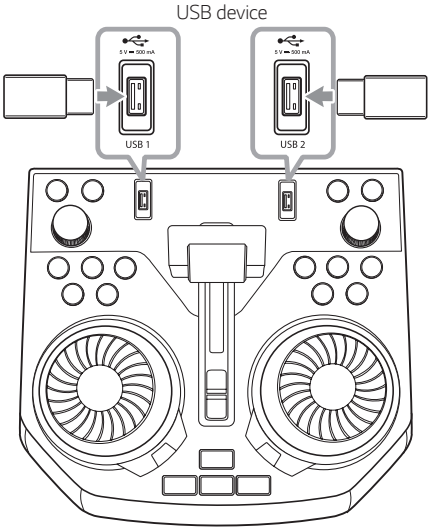

Note

Removing the USB device from the unit :

1. Choose a different function/mode or press ☐ twice in a row.
2. Remove the USB device from the unit.

Antenna Connection

Connect the supplied FM antenna for listening to the radio.

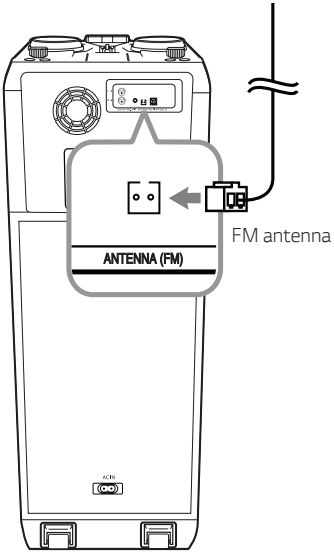

Note

Be sure to fully extend the FM wire antenna.

Basic Operations

CD/USB Operations

1. Insert the disc by pressing ⏏.
   Or connect the USB device to the USB port.
2. Select CD or USB function by pressing **F**.

To	Do this
Stop	Press ☐.
Playback	Press ▷II.
Pause	Press ▷II during playback.
Searching for a section within a track/file	Press and hold ⏮/⏭ during playback and release it at the point you want to listen to.
Selecting a track/file directly	Press **0** to **9** numerical buttons on the remote control to go to the desired file or track directly.
Skipping to the next/previous track/file	- In stop status, Press ⏮/⏭ to go to the next/ previous track/file. - During playback, (1) By using ⏮/⏭ buttons : Press ⏭ to go to the next track/ file. Playing in less than 3 seconds, press ⏮ to go to the previous track/file. Playing after 3 seconds, press ⏮ to go to the beginning of the track/file. (2) By using **SEARCH** : Rotate **DJ SCRATCH / SEARCH & MULTI** or ⏮/⏭ and press ▷II to play the track/ file.
Playing repeatedly or randomly	Press **REPEAT** on the remote control repeatedly. Refer to the note for details about the display change.

Note

- Repeat/Shuffle playback operates as follows.

On Display	Description
OFF	Plays songs in order, and stops the playback.
ONE	Plays a same song repeatedly.
FOLDER	Plays songs in a folder repeatedly. (Except AUDIO CD)
ALL	Plays all the songs repeatedly.
SHUFFLE	Plays all the songs once randomly, and stops the playback.

- When you play JUKE BOX list, only ONE and ALL are available.
- Even after restarting the unit or switching one function to another, you can listen to music from the point where it's last been played.
- If you leave the disc tray open for 5 minutes, it will close automatically.

Auto Play

- AUDIO/MP3/WMA CD is played automatically after disc tray is open and then closed.
- Automatically switches to the CD function if disc tray is open and then closed even when there is no disc in disc tray.

Selecting a folder and an MP3/WMA file

On the unit

1. Press **SEARCH** and rotate **DJ SCRATCH / SEARCH & MULTI** or ⏮/⏭ until a desired file appears. You can also search a folder if you press **SEARCH** again.
2. Press **OK** or ⏯ to play the selected file. When you search a folder, press **OK** to select a file in the folder, then press **OK** or ⏯ again. The selected file is played.

On the remote control

1. Press **PRESET·FOLDER** ∧/∨ or ⏮/⏭ repeatedly until a desired folder appears.
2. Press ⏯ to play it. The first file of folder will be played.

Note

- CD / USB Folders/Files are recognized as below.

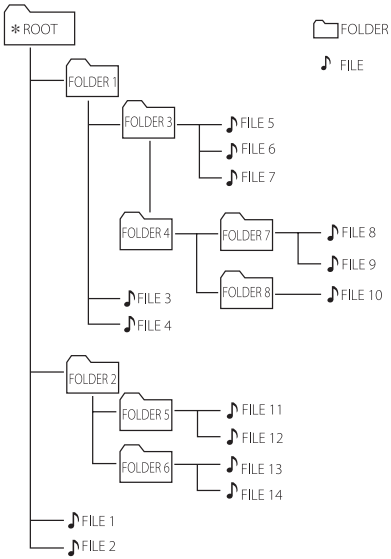

- If there is no file in a folder, the folder will not appear.
- Folders will be presented as the following order,
  ROOT → FOLDER 1 → FOLDER 3 → FOLDER 7 → FOLDER 8 → FOLDER 5 → FOLDER 6
- File will be played from ♪ file No.1 to ♪ file No.14 one by one.
- Files and folders will be presented in order recorded and may be presented differently according to the record circumstances.

*ROOT : The first screen you can see when a computer recognize the CD/USB is "ROOT".

Deleting a file/folder or format

You can delete file, folder on your USB or format the USB.

1. Select USB function by pressing **F**.
2. Press **DELETE** on the remote control repeatedly, the display changes as followings.
   DEL FILE → DEL DIR → FORMAT

On Display	Description
DEL FILE	Select the file you want to delete
DEL DIR	Select the folder you want to delete
FORMAT	Select to format the USB device.

   If you want to exit the current mode, press ☐.

3. To delete file/folder or format, press and hold **DELETE** on the remote control.

Caution

- Do not extract the USB device during operation. (play, delete, etc.)
- Regular back up is recommended to prevent data loss.
- The delete function may not be supported according to the USB status. (lock, etc.)

Playback Effect

The unit supports various sound and playback effects : DJ EFFECT, DJ SCRATCH, DJ PAD, AUTO DJ, DJ LOOP, PARTY ACCELERATOR, PARTY KICK STARTER.

DJ EFFECT

It allows you to enjoy DJ EFFECT such as Flanger/Phaser/Wah/Delay sound effect.

1. Press **DJ EFFECT** on the unit to select a desired DJ EFFECT (FLANGER, PHASER, WAH, DELAY, OFF).
2. Turn **DJ SCRATCH / LEVEL CONTROL** on the unit clockwise or counterclockwise to adjust the DJ EFFECT level between 0 to 15.

Note

- The DJ EFFECT mode is displayed for 3 seconds when a **DJ EFFECT** key on the unit is inputted.
- The current gage level is displayed when adjusting gage.
- If the function changed or the unit is turned off and on, DJ EFFECT mode with DJ EFFECT is turned off.

DJ SCRATCH

You can output and mix the sound effects of the DJ SCRATCH.

Rotating **DJ SCRATCH / SEARCH & MULTI** or **DJ SCRATCH / LEVEL CONTROL** on the unit to mix the scratch sound.

- You can hear effect of scratch sound depending on the direction in which you rotate **DJ SCRATCH / SEARCH & MULTI** or **DJ SCRATCH / LEVEL CONTROL** on the unit.

AUTO DJ

Auto DJ blends the end of one song into the beginning of another for seamless playback.
It equalizes volume across tracks/files for uninterrupted playback.

Press **AUTO DJ** on the remote control repeatedly, the display changes as followings.

SHUFFLE → SEQUENTIAL → OFF

On Display	Description
OFF	-
SHUFFLE	The music is played randomly on this mode.
SEQUENTIAL	The music is played repeatedly on this mode.

Note

- AUTO DJ mode does not support searching for a section within a track/file or to play repeatedly or randomly.
- If you move to other functions or stop the music using ☐ on AUTO DJ mode, AUTO DJ will be disabled.
- AUTO DJ is not supported in the music file whose length is less than 60 seconds.
- Only SEQUENTIAL is selected when played JUKE BOX list.

DJ PAD

It allows you to mix CLUB, DRUM or USER sound effect. Each mode has up to 3 sounds effect.

1. Press and hold **DJ PAD (CLUB, DRUM or USER)** on the unit to select a desired DJ PAD sound effect.
2. Press a **DJ PAD** Pad **(1, 2, 3)** of desired sound on the unit.

Note

- If you want to use USER, you have to register a source with "Music Flow Bluetooth" app. If the source is not register to USER, "EMPTY" or "NO SOUND" appears on the display window.
- Initial DJ PAD mode is CLUB sound effect.
- DJ PAD mode is displayed for 3 seconds when you press **DJ PAD (CLUB, DRUM or USER)** on the unit.
- The DJ PAD sound is mixed when you press a **DJ PAD** Pad **(1, 2, 3)** on the unit.
- The currently playing DJ PAD sound is stopped and the selected DJ PAD sound outputs if you press a different **DJ PAD** Pad **(1, 2, 3)** on the unit while DJ PAD sound is playing.

DJ LOOP

The certain section (about 1 sec) of sound is repeatedly played. (CD, USB Only)

During playback, press and hold **DJ LOOP** on the unit at the point you want. And you can cancel DJ LOOP function by releasing it.

Note

This function is released after operating 10 times or releasing **DJ LOOP** on the unit.

PARTY ACCELERATOR

It allows you to create a party atmosphere.

1. Select the mode by pressing **PARTY ACCELERATOR MODE** on the unit.
   The sound effect will react differently according to the mode.

   MODE 1 → MODE 2 → MODE 3
2. After selecting the mode, slide up the lever of **PARTY ACCELERATOR** on the unit to create a party atmosphere.
   The lighting on the speakers, the LED lighting and the sound effect will react according to moving the lever of **PARTY ACCELERATOR** on the unit.

   OFF → ACCEL 1 → ACCEL 2 → CLIMAX

PARTY KICK STARTER

In power off state, thixs function turns on the unit with Party Kick Starter sound.

In power on state, this function mixes the music with Party Kick Starter sound.

In the power off state

1. Press **PARTY STARTER** on the unit
2. "COME ON" appears on the display window with Party Kick Starter sound. Then volume level and function will appear before the power off.

In the power on state

1. Press **PARTY STARTER** on the unit
2. "COME ON" appears on the display window with Party Kick Starter sound.

Note

- If you want to change sound effect, you have to record a sound effect with "Music Flow Bluetooth" app.
- In case of CHILDSAFE mode, Party Kick Starter sound is not output.

Using BLUETOOTH® wireless technology

About Bluetooth

Bluetooth is wireless communication technology for short range connection.

The sound may be interrupted when the connection interfered by the other electronic wave or you connect the **Bluetooth** in the other rooms.

Connecting individual devices under **Bluetooth** wireless technology does not incur any charges. A mobile phone with **Bluetooth** wireless technology can be operated via the Cascade if the connection was made via **Bluetooth** wireless technology.

- Available Devices : Smart phone, MP3, Notebook, etc.
- Version : 4.0
- Codec : SBC, AAC

Bluetooth Profiles

In order to use **Bluetooth** wireless technology, devices must be able to interpret certain profiles. This unit is compatible with following profile.

A2DP (Advanced Audio Distribution Profile)

Listening to music stored on the Bluetooth devices

Pairing your unit and Bluetooth device

Before you start the pairing procedure, make sure the **Bluetooth** feature is activated on your **Bluetooth** device. Refer to your **Bluetooth** device's user guide. Once a pairing operation is performed, it does not need to be performed again.

1. Turn on the unit.

Note

When Bluetooth connection lock is activated, you can search **Bluetooth** device in BT function.

2. Operate the **Bluetooth** device and perform the pairing operation. When searching for this unit with the **Bluetooth** device, a list of the devices found may appear in the **Bluetooth** device display depending on the type of **Bluetooth** device. Your unit appears as "LG OK75 (XX)".

Note

- XX means the last two digits of **Bluetooth** address. For example, if your unit has a **Bluetooth** address such as 9C:02:98:4A:F7:08, you will see "LG OK75 (**08**)" on your **Bluetooth** device.
- Depending on the **Bluetooth** device type, some devices may have a different pairing process. Enter the PIN code (0000) as needed.
- You can connect this unit with up to 3 **Bluetooth** devices simultaneously using the same method as described above, only in the **Bluetooth** function.
- The multi phone pairing connection is only supported on Android devices. (Multi phone pairing connection may not be supported depending on the connected device specifications.)
- Removable/detachable **Bluetooth** devices (Ex: Dongle etc.) will not support multi phone pairing.

3. When this unit is successfully connected with your **Bluetooth** device, "PAIRED" appears on the display window and change to **Bluetooth** device name soon. Then "BT" will appear on the display window.

Note

- "PAIRED" will momentarily appear on the display when you connect other devices for multi phone pairing.
- If the device name is unavailable, "_" will be displayed.

4. Listen to music.
   To play a music stored on your **Bluetooth** device, refer to your **Bluetooth** device's user guide.

Note

- When using **Bluetooth** technology, you have to make a connection between the unit and the **Bluetooth** device as close as possible and keep the distance.
  However, it may not work well in certain situations as described below :
  - There is a obstacle between the unit and the **Bluetooth** device.
  - There is a device using same frequency with **Bluetooth** technology such as a medical equipment, a microwave or a wireless LAN device.
- If **Bluetooth** connection does not work well, try pairing it again.
- Even if this unit connected up to 3 **Bluetooth** devices in the **Bluetooth** mode, you can play and control music by using only one of the connected devices.

Note

- The sound may be interrupted when the connection has interference from other electronic devices.
- Depending on the type of the device, you may not be able to use the **Bluetooth** function.
- You can enjoy wireless system using phone, MP3, Notebook, etc.
- The more distance between the unit and the **Bluetooth** device, the lower the sound quality becomes.
- **Bluetooth** connection will be disconnected when the unit is turned off or the **Bluetooth** device gets far from the unit.
- When **Bluetooth** connection is disconnected, connect the **Bluetooth** device to the unit again.
- When a **Bluetooth** device is not connected, "BT READY" appears on the display window.
- When you use the **Bluetooth** function, adjust the volume to a proper level on the **Bluetooth** device.
- When you connect **Bluetooth** device (iOS device etc.) to this unit or operate the device, the volume level can be synchronized with each other.
- **Bluetooth** connection will be disconnected when you change the **Bluetooth** function to the others. In "Music Flow Bluetooth" app connection, only one device which you are playing keeps **Bluetooth** connection. You can control the **Bluetooth** device with this unit but you cannot use sound output.
- When entering **Bluetooth** function, this unit automatically connect to **Bluetooth** device which is connected the last or playbacked the last. (Auto connection may not be supported depending on the connected device specifications.)

Controls connected Bluetooth device

You can control connected Bluetooth device by the unit; play, pause, stop, skip.

Note

- Only Android OS and iOS is available to use this function.
- This function may not be supported depending on the **Bluetooth** device, or operated differently.

Bluetooth connection lock (BT LOCK)

You can limit **Bluetooth** connection to only BT (**Bluetooth**) and LG TV function to prevent unintended **Bluetooth** connection.

To turn on this function, press and hold ▷II for about 5 seconds in BT (**Bluetooth**) function.
"ON-BT LOCK" appears then you can limit **Bluetooth** connection.

To turn off this function, press and hold ▷II for about 5 seconds in BT (**Bluetooth**) function.
"OFF-BT LOCK" appears.

Note

Even if you set up **Bluetooth** connection lock to On, this unit turns on by Auto Power function. Turn off Auto Power function to prevent it.

Using the Music Flow Bluetooth App

Note

- Only Android OS is available to use "Music Flow Bluetooth" app with this unit.
- It is recommended to use the latest version of app.

About "Music Flow Bluetooth" App

"Music Flow Bluetooth" app brings a suite of new features to this unit.

To enjoy more features, you are recommended to download and install free "Music Flow Bluetooth" app.

Here is introduce a few of the many features of "Music Flow Bluetooth" app.

Multi Juke box : Your entertainment increases three fold when you connect up to 3 **Bluetooth** phones at the same time. Play music from all three phone and create a customized playlist from all the phones.

Sampler Creator : Record effects on your smartphone and very simply sync them via **Bluetooth** to the system. Be as creative as you can be.

Install "Music Flow Bluetooth" App onto Your Bluetooth Device

There are two ways to install "Music Flow Bluetooth" App onto Your **Bluetooth** Device.

Install "Music Flow Bluetooth" App through QR code

1. Install "Music Flow Bluetooth" app through QR code. Use the scanning software to scan the QR code.

2. Tap an icon for installation.

Note

- Make sure that your **Bluetooth** device is connected to the Internet.
- Make sure that your **Bluetooth** device has a scanning software application. If you don't have one, download one from "Google Android Market (Google Play Store)".
- Depending on the area, QR code may not work.

Install “Music Flow Bluetooth” App through “Google Android Market (Google Play Store)”

1. Tap the “Google Android Market (Google Play Store)” icon.
2. In the search bar, type in the “Music Flow Bluetooth” and search it.
3. In the search result list, find and tap “Music Flow Bluetooth” to start downloading **Bluetooth** app.
4. Tap an icon for installation.
5. Tap an icon for downloading.

Note

- Make sure that your **Bluetooth** device is connected to the Internet.
- Make sure that your **Bluetooth** device is equipped with “Google Android Market (Google Play Store)”.

Activate Bluetooth with “Music Flow Bluetooth” App

“Music Flow Bluetooth” app helps to connect your **Bluetooth** device to this unit.

1. Tap “Music Flow Bluetooth” app icon on the home screen to open “Music Flow Bluetooth” app, and go to the main menu.
2. If you want to get more information to operate, tap [Setting] and tap [Help] menu.

Note

- “Music Flow Bluetooth” app will be available in the software version as follow;
  - Android O/S : Ver 4.0.3 (or later)
- If you use “Music Flow Bluetooth” app for operation, there would be some differences between “Music Flow Bluetooth” app and the supplied remote control. Use the supplied remote control as necessary.
- Depending on the **Bluetooth** device, “Music Flow Bluetooth” app may not work.
- After connection of “Music Flow Bluetooth” app, music may be output from your device. In this case, try connecting procedure again.
- If you operate the other applications or change the settings on your **Bluetooth** device while using “Music Flow Bluetooth” app, “Music Flow Bluetooth” app may operate abnormally.
- When “Music Flow Bluetooth” app operates abnormally, check your **Bluetooth** device and the connection of “Music Flow Bluetooth” app and then try to connect again.
- Depending on the smart phone's operating system, you have some differences for “Music Flow Bluetooth” operation.
- Check **Bluetooth** setting on your **Bluetooth** device if “Music Flow Bluetooth” app connection does not work well.

Radio Operations

Be sure that FM antenna is connected. (Page 18)

Listening to the radio

1. Press **F** until FM appears in the display window. The last received station is tuned in.
2. Auto tuning :
   Press and hold **TUNING-/+** on the remote control or **⏮/⏭** on th e unit for about two seconds until the frequency indication starts to change, then release. Scanning stops when the unit tunes in a station.

   Or

   Manual tuning :
   Press **TUNING-/+** on the remote control or **⏮/⏭** on the unit repeatedly.
3. Adjust the volume by pressing **VOL +/-** on the remote control or by rotating **MASTER VOL. +/-** knob on the unit repeatedly.

Improving poor FM reception

Press **⏯**. This will change the tuner from stereo to mono and usually improve the reception.

Presetting the Radio Stations

You can preset 50 stations for FM.

Before tuning, make sure to turn down the volume.

1. Press **F** until FM appears in the display window.
2. Select the desired frequency by pressing **TUNING -/+** on the remote control or **⏮/⏭** on the unit.
3. Press **JUKEBOX/MEMORY** on the remote control. A preset number will blink in the display window.
4. Press **PRESET·FOLDER ∧/∨** on the remote control to select the preset number you want.
5. Press **JUKEBOX/MEMORY** on the remote control. The station is stored.
6. Repeat steps 2 to 5 to store other stations.
7. To listen a preset station, press **PRESET·FOLDER ∧/∨** or **0** to **9** numerical buttons on the remote control.

Deleting all the saved stations

1. Press **DELETE** on the remote control.
   "DEL ALL" will flash up on the display window
2. Press **DELETE** on the remote control to erase all the saved radio stations.
   "DELETED ALL" will scroll on the display window.

Seeing information about a Radio station

The FM tuner is supplied with the RDS (Radio Data System) facility. This shows information about the radio station being listened to. Press **RDS/SET** on the remote control repeatedly to cycle through the various data types:

PS (Programme Service Name)

The name of the channel will appear in the display.

PTY (Programme Type Recognition)

The programme type (e.g. Jazz or News) will appear in the display.

RT (Radio Text)

A text message contains special information from the broadcast station.

This text may scroll across the display.

CT (Time controlled by the channel)

This shows the time as broadcast by the station.

You can search the radio stations by programme type by pressing **RDS/SET** on the remote control. The display will show the last PTY in use. Press **PTY** one or more times to select your preferred programme type. Press and hold **⏮/⏭**. The tuner will search automatically. When a station is found the search will stop.

Sound adjustment

Setting the sound mode

This system has a number of pre-set surround sound fields. The displayed items for the equalizer may be different depending on sound sources and effects.

You can select a desired sound mode by using **EQUALIZER** on the remote control.

On Display	Description
BASS (BASS BLAST) or BASS+ (BASS BLAST+)	Reinforces the bass and powerful sound.
POP CLASSIC ROCK JAZZ	This program lends an enthusiastic atmosphere to the sound, giving you the feeling you are at an actual rock, pop, jazz or classic concert.
FOOTBALL	You can enjoy the equalizer FOOTBALL STADIUM.
STANDARD	You can enjoy optimized sound.

You can select a desired sound mode by using **SPECIAL EQ** on the remote control or **SPECIAL EQ / BASS BLAST** (or **BASS BLAST+**) on the unit.

On Display	Region	Description
FUNK, REGUETON, SAMBA, MERENGUE, AXE, SALSA, SERTANEJ, FORRO	Latin America	Optimized equalizer for the music genre prefered in each region.
ARABIC	Middle East	
DANGDUT	Indonesia	
AFRO	Africa	
INDIA	India	

Note

By pressing and holding **SPECIAL EQ / BASS BLAST** (or **BASS BLAST+**) on the unit for 3 seconds on the unit, you can directly select BASS (BASS BLAST) or BASS+ (BASS BLAST+) effect.

Setting the USER EQ

You can adjust the sound level of Bass, Middle and Treble as your preference.

1. Press **USER EQ** on the unit. "USER EQ" is displayed.
2. Press **USER EQ** on the unit repeatedly until desired setting appears in the display window.
3. Rotate **DJ SCRATCH / LEVEL CONTROL** on the unit to adjust the value.

Advanced Operations

Recording to USB

You can record a various sound source to USB. (CD, USB1, AUX, PORTABLE, FM)

1. Connect the USB device to the unit.
2. Press **F** to select a function you want to record.
3. Start the recording by pressing **USB REC** on the remote control or **USB REC / DEMO** on the unit.

Function	Status	Result
CD, USB	Play/Pause	Recorded until stop
	Resume stop (Page 36)	Quick recorded the latest song
	Full stop	Quick recorded All songs In case below, scope is limited. - After File search (Page 20), quick recorded an indexed song - Only while the Folder name is displayed on the display window, quick recording All songs on Folder. (Folder Search Mode is released when there is no button input for a few seconds after entering the folder search mode.) (Page 20) - After JUKE BOX On (Page 34), quick recorded All songs of JUKE BOX
AUX, PORTABLE, FM	-	Recorded until stop

- If you connect both USB1 and USB2, press **USB REC** on the remote control or **USB REC / DEMO** on the unit when USB1 or USB2 which you want to record blinks in the display window.

To stop recording

To stop recording, press and hold **USB REC** on the remote control or **USB REC / DEMO** on the unit for 3 seconds. Otherwise, the recording continues.

Pausing recording

During CD/USB playback or pause, or external sound source recording, press **USB REC** on the remote control or **USB REC / DEMO** on the unit to pause recording. Press it again to restart recording.

Note

- VOICE CANCELLER or KEY CHANGER will be reset, if you use recording function during operating VOICE CANCELLER or KEY CHANGER.
- VOICE CANCELLER or KEY CHANGER can not be operated during recording.

To select recording bit rate

1. Press and hold **USB REC** on the remote control or **USB REC / DEMO** on the unit for 3 seconds.
2. Press ⏮/⏭ to select a bit rate.
3. Press **USB REC** on the remote control or **USB REC / DEMO** on the unit to finish the setting.

The making of unauthorized copies of copy-protected material, including computer programs, files, broadcasts and sound recordings, may be an infringement of copyrights and constitute a criminal offense. This equipment should not be used for such purposes.
Be responsible
Respect copyrights

Note

- For stable recording, the output sound level goes down on its own when you record music from CD to USB.
- You can only change volume level between MIN and 30 during recording. (Only CD function)
- When you stop recording, the file that has been recorded at that time will be stored. (Except when recording MP3/ WMA files that are in stop status.)
- Do not remove the USB device or turn off the unit during USB recording. If does not, an incomplete file may be made and not deleted on PC.
- If USB recording does not work, the message like "NO USB", "ERROR", "USB FULL", "NOT SUPPORT" or "FILE MAX" is displayed on the display window.
- Multi card reader device or external HDD can not be used for USB recording.
- A file is recorded by about 512 Mbyte when you record for a long term.

Note

- You can record various sound using DJ EFFECT, DJ SCRATCH, DJ PAD, PARTY KICK STARTER or MIC.
  (Except when recording USB/ CD that are in stop status.)
- You can control recorded microphone sound according to microphone volume.
- You may not store more than 2,000 files.
- In case of the unsupported MP3/WMA file, the file recording may be stopped.
- When you are recording during playback, the sound now playing is output.
- It'll be stored as follows.

AUDIO CD	MP3/WMA
Play or pause status CD_REC AUDIO_0001 AUDIO_0002 :	Play or pause status FILE_REC AUDIO_0001 AUDIO_0002 :
The other status CD_REC TRACK_0001 TRACK_0002 :	The other status FILE_REC ABC(File name) DEF(File name) :
The other source*	**Tuner**
OTHERS_REC AUDIO_0001 AUDIO_0002 :	TUNER_REC AUDIO_0001_107~7FM :

* : AUX and the like.

Tuner : The current recording frequency is shown.

JUKE BOX Playback

JUKE BOX function enables you to make a playlist of your favorite tracks/files from a disc or USB device. A playlist of up to 100 tracks/files can be entered.

Making JUKE BOX list

1. Press and hold **JUKEBOX / MEMORY** on the remote control to enter the edit mode. (Playing will be stopped when you press **JUKEBOX/MEMORY** on the remote control.)
2. Select a track/file by pressing ⏮/⏭ on the remote control.
3. Press **JUKEBOX/MEMORY** on the remote control to save the track/file.
4. Repeat steps 2 - 3 to store other tracks/files. (You can modify the list by pressing **PRESET·FOLDER** ∧/∨ on the remote control to select the JUKE BOX program number.)
5. Press **JUKEBOX/MEMORY** on the remote control once again.

To play the JUKE BOX list, press ⏯ on the remote control after you make the list.

Note

When making or modifying the JUKE BOX list, REPEAT mode is off.

Enjoying JUKE BOX

Press **JUKEBOX/MEMORY** on the remote control once. "ON - JUKE BOX" appears on the display window.

To play JUKE BOX list, press ⏯ on the remote control.

To cancel it, press **JUKEBOX/MEMORY** on the remote control once.
"OFF - JUKE BOX" appears on the display window.

Editing JUKE BOX

1. Press and hold **JUKE BOX / MEMORY** on the unit to enter the edit mode. (Playing will be stopped when you press **JUKEBOX/MEMORY** on the remote control.)
2. Press **PRESET·FOLDER** ∧/∨ on the remote control to select a track/file to edit.
3. Press ⏮/⏭ on the remote control.
4. Press **JUKEBOX/MEMORY** on the remote control.
5. Repeat 2 to 4 to store the other tracks/files.
6. Press **JUKEBOX/MEMORY** on the remote control once again.

To play the JUKE BOX list, press ⏯ on the remote control after you edit the list.

Deleting JUKE BOX list

Deleting function only works in the edit mode.

1. Press and hold **JUKEBOX/MEMORY** on the remote control to enter the edit mode.

   Or

   Press **DELETE** on the remote control while JUKE BOX is played to enter the edit mode.
2. Select a song by pressing **PRESET·FOLDER** ∧/∨ on the remote control repeatedly.
3. Press **DELETE** on the remote control while a song is selected.

Note

- If there is no JUKE BOX list, "NO PROG" appears on the display window when you press **JUKEBOX/MEMORY** on the remote control.
- JUKE BOX is switched off in the case below.
  - Changing to a different function.
  - Turning off and on the unit.
  - Operating the numerical buttons on the remote control.
  - Playing a file by using **SEARCH** and **DJ SCRATCH / SEARCH & MULTI** on the unit.
- JUKE BOX list is cleared in the case below.
  - Removing the disc or the USB device.
  - Deleting or recording music files in the USB device.

Other Operations

Turn off the sound temporarily

Press 🔇 on the remote control to mute your sound.

You can mute your unit, for example, to answer the telephone, the "MUTE" will appear in the display window.

To cancel it, press 🔇 on the remote control again or change the volume level.

DRC (Dynamic range control)

Make the sound clear when the volume is turned down and prevent a sudden sound increase (Dolby Digital only).

Press ▷II in OPTICAL function to turns on or off this function.

Note

This function only operates on OPTICAL function.

CHILDSAFE Mode

This function helps to prevent you from being surprised when you turn on the unit in case that the volume of the unit is set at a high level.

To turn on CHILDSAFE mode, press and hold **OK** on the unit when the volume of the unit is "MIN".

In CHILDSAFE mode, the volume increase gradually.

To turn off CHILDSAFE mode, press and hold **OK** on the unit when the volume of the unit is "MIN" and this mode is turned on.

Note

In case of CD, USB or BT function, CHILDSAFE mode does not work after about 2 minutes from power on the unit even if this mode is enabled.

DEMO

In the power off state, press **USB REC / DEMO** on the unit once. The unit will power on and display the each of functions with demo sound in the display window.
To cancel the DEMO function, press **USB REC / DEMO** on the unit once more.

Note

You can enjoy other functions during the DEMO, the DEMO will temporarily pause.
- Without input key in 10 sec, the DEMO will play back automatically.

Resume stop

The unit records the point where you pressed ☐ depending on the disc or USB.

If you press ☐ twice, the unit will clear the stopped point.

Using your TV remote control

You can control some functions of this unit by your TV remote control even by other company's product. Controllable functions are volume up/down and mute.

Press and hold 🔇 on the remote control for about 3 seconds in OPTICAL function to turn on or off this function.

On Display	Description
ON-TV REMOTE	TV REMOTE function is turned on.
OFF-TV REMOTE	TV REMOTE function is turned off.

Note

- Supported TV brands

LG	Panasonic	Philips	Samsung
Sharp	Sony	Toshiba	Vizio

- Make sure that the sound output of your TV is set to [External speaker].
- Depending on the remote control, this function may not work well.
- This function does not operate on LG TV's magic remote control.
- This function only operates on the OPTICAL function.

Using Microphone

1. Connect your microphone to the MIC jack.
2. Play the music you want.
3. Sing along with the accompaniment. Adjust the microphone volume by rotating **MIC VOL. -/+** clockwise or counterclockwise on the unit.

Note

- When not using the microphone, set the MIC volume to minimum or turn off the MIC and remove the microphone from the MIC jack.
- If the microphone is set too near the speaker, a howling sound may be produced. In this case, move the microphone away from the speaker or decrease the sound level by using the **MIC VOL. -/+** on the unit.
- If sound through the microphone is extremely loud, it may be distorted. In this case, rotate **MIC VOL. -/+** on the unit.
- You can give an echo effect to the sound from the microphones by pressing **MIC ECHO**.

VOICE CANCELLER

You can reduce the vocal tones during music playback from various input sources.
Press the **VOICE CANCELLER** and "ON-VOICE CANCELLER" will appear in display window.

To cancel it, press **VOICE CANCELLER** again.

The quality of the VOICE CANCELLER may be different depending on the recording conditions of music files.

Note

- This function is available CD, USB or BT (**Bluetooth**) Function.
- If the function is not available, "NOT SUPPORT" appears in the display window.
- This function is available to use only when a microphone is connected.
- If a microphone is not connected, "INSERT MIC" appears in the display window.
- It is not available on the mono source.
- To initialize it, change the function or disconnect the microphone.
- This function may not be initialized depending on the status of connected devices.

KEY CHANGER

You can adjust the key to 9 steps (4 steps higher, 4 steps lower and the original key).

- To sharp the key one by one, press the **KEY CHANGER**(♯) repeatedly during playback.
- To flatten the key one by one, press the **KEY CHANGER**(♭) repeatedly during playback.

Note

- This function is available CD, USB or BT (**Bluetooth**) Function.
- To initialize it, change the function, disconnect the microphone or change the music.
- This function may not be initialized depending on the status of connected devices.
- If the function is not available, "NOT SUPPORT" appears in the display window.
- If a microphone is not connected, "INSERT MIC" appears in the display window.

VOCAL EFFECTS

When you connect your microphone to the MIC jack, you can enjoy karaoke function by changing voice in the various source.

To select various mode, pressing **VOCAL EFFECTS** repeatedly or pressing **VOCAL EFFECTS** and then turning **DJ SCRATCH / LEVEL CONTROL** on the unit when vocal effects mode appears in the display window.

BASS → SOPRANO → HELIUM → ROBOT → DUET MAN → DUET WOMAN → BASS ECHO1 → SOPRANO ECHO1 → HELIUM ECHO1 → ROBOT ECHO1 → DUET MAN1 → DUET WOMAN1 → BASS ECHO2 → SOPRANO ECHO2 → HELIUM ECHO2 → ROBOT ECHO2 → DUET MAN2 → DUET WOMAN2 → OFF

Note

- If a microphone is not connected, "INSERT MIC" appears in the display window.
- If you press **KEY CHANGER**, **DJ EFFECT** or **MIC ECHO** on the unit on VOCAL EFFECTS mode, after backing up current VOCAL EFFECTS, turn off VOCAL EFFECTS mode and operate KEY CHANGER, DJ EFFECT or ECHO mode.
- To turn off VOCAL EFFECTS mode, press and hold **VOCAL EFFECTS** on the unit.

ECHO

When you connect your microphone to the MIC jack, you can give an echo effect to the sound from the microphones by pressing **MIC ECHO**.

ECHO 1 → ECHO 2 → ECHO OFF

Note

- If a microphone is not connected, "INSERT MIC " appears in the display window.
- If you press **VOCAL EFFECTS** button on ECHO mode, after backing up current ECHO, turn off ECHO mode and operate VOCAL EFFECTS mode.
  Press **MIC ECHO** again, after backing up current VOCAL EFFECTS, operate ECHO mode.

LIGHTING

This function offers a party atmosphere by operating the lighting on the unit.

Press **LIGHTING** on the unit repeatedly or press **LIGHTING** on the unit and then turn **DJ SCRATCH / LEVEL CONTROL** on the unit.

RHYTHM → PARTY → FIREWORK → SPACE → WATER → FOREST → CITYGLOW → (MYSTYLE)→ OFF

Note

- Lighting function is available in all functions.
- Lighting mode retains its previous mode when you first press **LIGHTING** on the unit, press again to change modes.
- If you want to use MYSTYLE, you have to register a source with "Music Flow Bluetooth" app.
- If you want to enjoy the dynamic lighting effect, select the RHYTHM or the PARTY.
- Do not look directly at the light emitting part when the LIGHTING is turned on.
- If the illumination brightness is glaring, switch on the room lights or turn off the **LIGHTING** of the unit.
- To turn on or off upper and lower lighting LED, press and hold **LIGHTING** on the unit for 3 seconds.

On Display	Description
ON-FLASH	Upper and lower lighting LED is turned on.
OFF-FLASH	Upper and lower lighting LED is turned off.

Sleep Timer Setting

Press **SLEEP** on the remote control repeatedly to select delay time between 10 and 180 minutes. After the delay time, the unit will be turned off.

To cancel the sleep function, press **SLEEP** on the remote control repeatedly until "OFF" appears.

Note

- You can check the remaining time before the unit is turned off. Press **SLEEP** on the remote control to check or change the remaining time.
- You can edit the remain time when displays the remaining time or "DIMMER".

Dimmer

Press **SLEEP** on the remote control once.
The display window will be darkened by half.

To cancel it, press **SLEEP** on the remote control repeatedly until "OFF" appears.

Note

All the lighting turns off when Dimmer is being operated.

Auto power down

This unit will turn itself off to save electricity in the case were the main unit is not connected to an external device and is not used for 15 minutes.
The unit will also turn itself off after six hours if the main unit has been connected to another device using the analog inputs.
Auto power down function is applied to only MAIN unit in case of WIRELESS PARTY LINK connection.
In case of OHTER unit, Auto power down is available after disconnection OHTER unit and MAIN unit.

How to disconnect the wireless network connection or the wireless device.

Turn off the unit by pressing the power button for more than 5 seconds.

AUTO POWER On

This unit automatically turns on by an input source : LG TV, **Bluetooth** or Optical.

When you turn on your TV connected to this unit, this unit recognizes the input signal and selects the suitable function. You can hear the sound from the unit.

If you try to connect your **Bluetooth** device, this unit turns on and connects your **Bluetooth** device.
You can play your music.

When you turn off this unit by pressing ⏻ on the unit for 5 seconds each time, you can turn on or off the AUTO POWER function.

On Display	Description
ON-AUTO POWER	AUTO POWER function is turned on.
OFF-AUTO POWER	AUTO POWER function is turned off.

Note

- Depending on the connected device, this function may not operate.
- Depending on the connected device, the unit turns on but **Bluetooth** function may not be connected.
- If you disconnect **Bluetooth** connection by this unit, some **Bluetooth** devices try to connect to the unit continually. Therefore it is recommended to disconnect the connection before turning off the unit.
- If you try to connect to the "Music Flow Bluetooth" app, **Bluetooth** function of this unit is turned on.
- If you turn on the unit using LG TV or **Bluetooth** function, proper function of this unit is turned on.
- If you have already paired with this unit, automatically this unit can turn on by an input source when this unit is turned off.
- If you turned off the unit directly, it cannot be turned on automatically by AUTO POWER function. However the unit can be turned on by AUTO POWER function when optical signal comes in after 5 seconds of no signal.

Auto function change

This unit recognizes input signals such as Optical, **Bluetooth**, LG TV and Portable and then changes to the suitable function automatically.

When you try to connect Bluetooth device

When you try to connect your **Bluetooth** device to this unit, **Bluetooth** function is selected. Play your music on the **Bluetooth** device.

When 3.5 mm stereo cable is connected

When you connect the portable device to the **PORT.IN** connector, PORTABLE function is selected. Play your music on the portable device.

When optical signal comes in

When you turn on the external device connected to this unit by an optical cable, this unit changes the function to optical. You can hear the sound from your device.

When LG TV signal comes in

When you turn on your LG TV connected by LG Sound Sync (Wireless connection), this unit changes the function to LG TV. You can hear the sound from your TV.

Note

- This function is not available during recording or deleting.
- This function only works with devices that were previously connected.
- If the **Bluetooth** connection lock function is set, **Bluetooth** and LG TV connection will be only available on **Bluetooth** and LG TV function.
- To change to optical function, it needs 5 seconds of no signal.
- LG Sound Sync (Optical) changes as same as OPTICAL function.

Setting the Clock

1. Turn the unit on.
2. Press and hold **CLOCK** on the remote control.
3. Select time mode by pressing ⏮ / ⏭ on the remote control.
   - AM 12:00 (for an AM and PM display) or 0:00 (for a 24 hour display)
4. Press **RDS/SET** on the remote control to confirm your selection.
5. Select the hours by pressing ⏮ / ⏭ on the remote control.
6. Press **RDS/SET** on the remote control.
7. Select the minutes by pressing ⏮ / ⏭ on the remote control.
8. Press **RDS/SET** on the remote control.

Setting the Clock through "Music Flow Bluetooth" App

Install "Music Flow Bluetooth" app on your Android device. (Page 27-28)

Your unit's clock will be automatically synchronized with your device by activating **Bluetooth** connection through "Music Flow Bluetooth" app.

Using your player as an alarm clock

1. Turn the unit on.
2. Press and hold **ALARM** on the remote control.
3. Press ⏮ / ⏭ on the remote control to change the hours and minutes and press **RDS/SET** on the remote control to save.
4. Press ⏮ / ⏭ on the remote control to select function and press **RDS/SET** on the remote control to save.
   - Press ⏮ / ⏭ on the remote control to select a preset number when you select tuner and then, press **RDS/SET** on the remote control. If there is no preset number, this step is skipped.
5. Press ⏮ / ⏭ on the remote control to change the volume and press **RDS/SET** on the remote control to save.

Note

- If you set the clock time, you can check the time by pressing **CLOCK** on the remote control even when the player is turned off.
- You can set alarm after you set the clock time.
- If you set the clock time and alarm, you can check the alarm setting information by pressing **ALARM** on the remote control even when the unit is turned off.
- You can select ALARM ON/OFF mode by pressing **ALARM** on the remote control.

WIRELESS PARTY LINK Connection

The output sound of Ⓐ(MAIN) unit is expanded to Ⓑ(OTHER) unit.
It is compatible with unit that supports WIRELESS PARTY LINK.
The name of function about sound expansion between the compatible products wirelessly was changed to WIRELESS PARTY LINK.

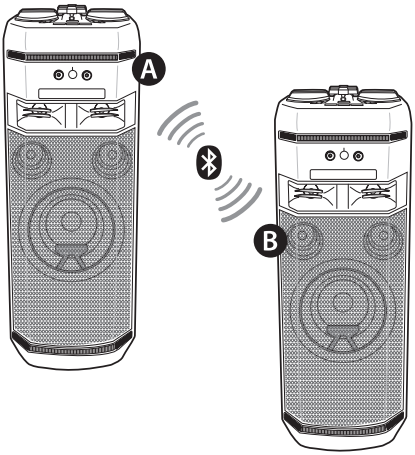

1. Press **WIRELESS LINK** on the unit.
   PARTY LINK MODE SELECT appears in the display window.
2. Press **WIRELESS LINK** on the unit to select MAIN or OTHER.
   - Ⓐ unit : Selects MAIN.
   - Ⓑ unit : Selects OTHER.

   Two units try to connect with each other.
3. When these units are successfully connected each other, each of connected device names appears in the each unit.

Note

- If you are using the LG Sound Sync or OPTICAL connection, this function is not available.
  - If you try to connect WIRELESS PARTY LINK when using LG Sound Sync function or OPTICAL function, "NOT SUPPORT" appears in the display window.
  - If you change the function from any other to OPTICAL or connected LG Sound Sync /OPTICAL when using WIRELESS PARTY LINK, the WIRELESS PARTY LINK will be released.
- You can use microphone in the OTHER unit only. In case of OTHER unit, some functions are supported only.
- When WIRELESS PARTY LINK is disconnected, OTHER unit is changed to BT (**Bluetooth**) function.
- If the connection is failed, "FAILED" appears in the display window.
- Mute function is synchronized with each other.
- WIRELESS PARTY LINK connection will be disconnected when you turn off the unit or press **WIRELESS LINK** on the unit.
- Sound of MAIN unit and OTHER unit may be different depending on playback status or source.

Note

- Check the following information when connecting to **Bluetooth.**
  - You can connect only one **Bluetooth** device in the MAIN unit. You cannot connect **Bluetooth** device to the OTHER unit.
  - WIRELESS PARTY LINK connection is only supported on Android devices. (WIRELESS PARTY LINK connection may not be supported depending on the connected device specifications or OS.)
  - Removable/detachable **Bluetooth** devices (ex. Dongle etc.) will not support WIRELESS PARTY LINK connection.
  - When WIRELESS PARTY LINK is connected, **Bluetooth** connection is not available in status of recording or deleting.
  - If you connect WIRELESS PARTY LINK while you are playing connected **Bluetooth** device, it may be reconnected again, depending on phone specification.
- MAIN / OTHER are may be displayed to MASTER (Primary) / SLAVE (Secondary) in the existing products.

Troubleshooting

General

Problem	Cause & Solution
The unit does not work properly.	• Turn off the power of this unit and the connected external device (TV, Woofer, DVD-player, Amplifier, etc.) and turn them on again. • Disconnect the power cord of this unit and the connected external device (TV, Woofer, DVD-player, Amplifier, etc.) and then try connecting again. • Previous setting may not be saved when device power is shut off.
No Power.	• The power cord is not plugged in. Plug in the power cord. • Check whether electricity failed. Check the condition by operating other electronic devices.
No sound.	• Check whether you select right function. Press function button and check the selected function.
The unit does not start playback.	• An unplayable disc is inserted. Check the playable disc. • No disc is inserted. Insert a disc. • The disc is dirty. Clean the disc. (Page 49) • The disc is inserted upside down. Place the disc with the label or printed side facing upwards.
Radio stations cannot be tuned in properly.	• The antenna is positioned or connected poorly. Connect the antenna securely. • The signal strength of the radio station is too weak. Tune to the station manually. • No stations have been preset or preset stations have been cleared (when tuning by scanning preset channels). Preset some radio stations, see page 29 for details.

Problem	Cause & Solution
The remote control does not work properly.	• The remote control is too far from the unit. Operate the remote control within about 7 m (23 feet). • There is an obstacle in the path of the remote control and the unit. Remove the obstacle. • The batteries in the remote control are exhausted. Replace the batteries with new ones.
No speaker light.	• Check the light effects by pressing **LIGHTING** (Page 39).
LG Sound Sync does not work.	• Check whether your LG TV supports LG Sound Sync. • Check connection of LG Sound Sync. • Check sound setting of your TV and this unit.

General specifications

General	
Power requirements	Refer to the main label on the unit.
Power consumption	Refer to the main label on the unit.
	Networked standby : 0.5 W (If all network ports are activated.)
Dimensions (W x H x D)	Approx. 330.0 mm x 925.0 mm x 360.0 mm
Operating temperature	5 °C to 35 °C
Operating humidity	60 %

Inputs	
Digital audio in (OPTICAL IN)	3.3 V (p-p), Optical jack x 1
Analog audio in (AUX IN)	2.0 Vrms (1 kHz, 0 dB), 600 Ω, RCA jack (L, R) x 1
Portable in (PORT. IN)	1.0 Vrms (3.5 mm stereo jack) x 1
Microphone (MIC 1/2)	Sensitivity 20 mV (1 kHz), 6.3 mm jack x 2

Tuner	
FM Tuning Range	87.5 to 108.0 MHz or 87.50 to 108.00 MHz

System	
Frequency Response	40 to 20,000 Hz
Signal-to-noise ratio	More than 75 dB
Dynamic range	More than 80 dB
Bus Power Supply (USB)	5 V ⎓ 500 mA
Available Digital Input Audio Sampling Frequency	32 kHz, 44.1 kHz, 48 kHz, 88.2 kHz, 96 kHz
Available Digital Input Audio format	Dolby Audio, PCM

Amplifier (RMS Output power)	
Total output	1,000 W RMS
HIGH	295 W RMS × 2 (4 Ω at 1kHz, 10% THD)
LOW	410 W RMS (3 Ω at 200Hz, 10% THD)

- Design and specifications are subject to change without notice.

Trademarks and licenses

All other trademarks are trademarks of their respective owners.

DOLBY AUDIO™

Manufactured under license from Dolby Laboratories. Dolby, Dolby Audio, and the double-D symbol are trademarks of Dolby Laboratories.

Bluetooth®

The **Bluetooth®** word mark and logos are registered trademarks owned by the Bluetooth SIG, Inc. and any use of such marks by LG Electronics is under license.

Other trademarks and trade names are those of their respective owners

Maintenance

Notes on Discs

Handling Discs

Never stick paper or tape on the disc.

Storing Discs

After playing, store the disc in its case. Do not expose the disc to direct sunlight or sources of heat and never leave it in a parked car exposed to direct sunlight.

Cleaning Discs

Fingerprints and dust on the disc can cause poor picture quality and sound distortion. Before playing, clean the disc with a clean cloth. Wipe the disc from the center to out.

Do not use strong solvents such as alcohol, benzine, thinner, commercially available cleaners, or anti-static spray intended for old vinyl records.

Handling the Unit

When shipping the unit

Please save the original shipping carton and packing materials. If you need to ship the unit, for maximum protection, re-pack the unit as it was originally packed at the factory.

Keeping the exterior surfaces clean

Do not use volatile liquids such as insecticide spray near the unit. Wiping with strong pressure may damage the surface. Do not leave rubber or plastic products in contact with the unit for a long period of time.

Cleaning the unit

To clean the player, use a soft, dry cloth. If the surfaces are extremely dirty, use a soft cloth lightly moistened with a mild detergent solution. Do not use strong solvents such as alcohol, benzine, or thinner, as these might damage the surface of the unit.

Maintaining the Unit

The unit is a high-tech, precision device. If the optical pick-up lens and disc drive parts are dirty or worn, the picture quality could be diminished. For details, please contact your nearest authorized service center.

LG

Life's Good