INSTALLATION MANUAL

AIR CONDITIONER

Please read this installation manual completely before installing the product.
Installation work must be performed in accordance with the national wiring standards by authorized personnel only.
Please retain this installation manual for future reference after reading it thoroughly.

Ceiling Concealed Duct
Original instruction
For commercial use

MFL69485431
Rev.00_092525

www.lg.com

Copyright © 2025 LG Electronics Inc. All Rights Reserved.

TABLE OF CONTENTS

3 FEATURES

4 SAFETY INSTRUCTIONS

21 INSTALLATION

21 Minimum floor area
28 Selection of the best location (Low Static)
29 Selection of the best location (Mid / High Static)
30 Ceiling dimension and hanging bolt location (Low Static)
31 Ceiling dimension and hanging bolt location (Mid Static)
32 Ceiling dimension and hanging bolt location (High Static)
33 Indoor Unit Installation
33 Wiring Connection
35 Electric Characteristics
37 Checking the Drainage
38 Drain Piping
40 DIP Switch Setting
41 Group Control Setting
46 Model Designation
46 Airborne Noise Emission

47 HOW TO SET E.S.P?

52 How to Set Auto ESP (Air conditioner)
53 R32 Leak detection system
54 Trouble Shooting for R32 Leak Detection System

Features

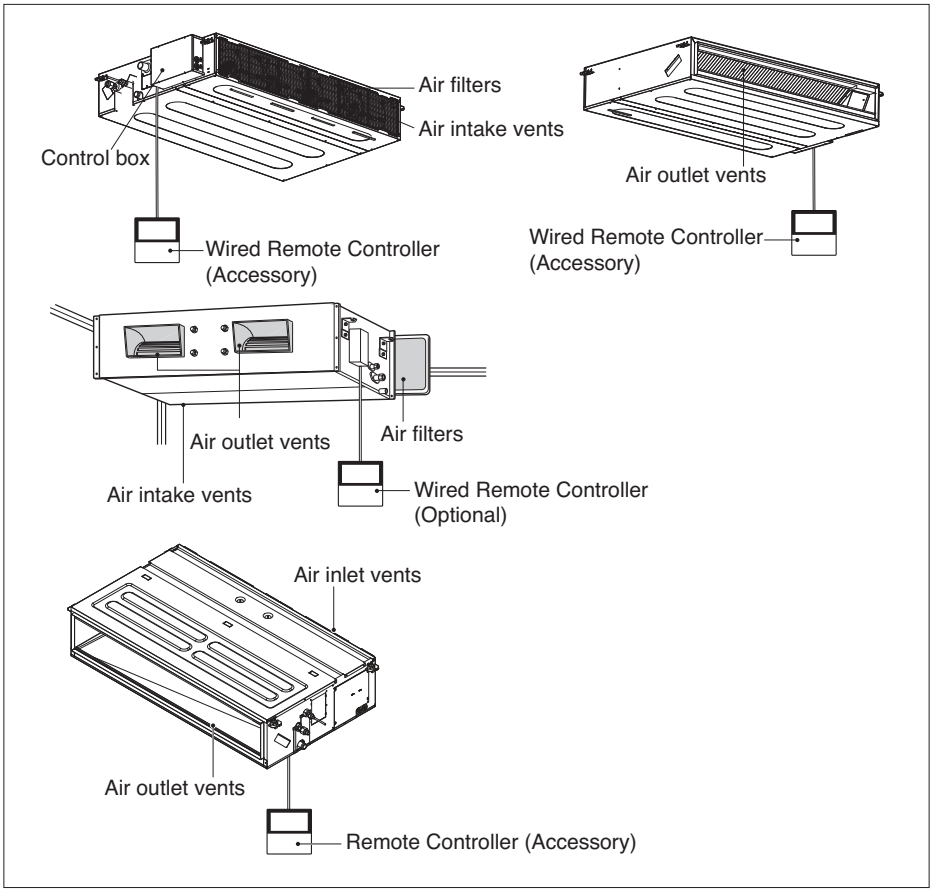

Installation Tool

Name	Drain hose	Clamp metal	Washer for hanging bracket	Clamp (Tie Wrap)	Insulation for fitting	(Other)
Quantity	1 EA	2 EA	8 EA	4 EA	1 SET	• Manual
Shape					 for gas pipe for liquid pipe	

Safety instructions

The following symbols are displayed on indoor and outdoor units.

	Read the precautions in this manual carefully before operating the unit.		This appliance is filled with flammable refrigerant. (for R32)
	This symbol indicates that the Operation Manual should be read carefully.		This symbol indicates that a service personnel should be handling this equipment with reference to the Installation Manual.

• Maximum and minimum operating temperatures of outdoor and indoor units

- Cooling operation

  Indoor units : 14~25°C (WB)

  Outdoor units

  1) ZRUN**0G(L)SS0 (** : 03,04,05,06) : -5~48 °C (DB)

  2) ZRUN**0LSS0 (** : 08,10,12) : -5~48 °C (DB)

  3) ZRUM**0LTE6 (**: 08,10,12,14,16,18,20,22,24,26,28)
  : -10~48 °C (DB) (Simultaneous Operation : -10~27 °C (DB))

- Heating operation

  Indoor units : 15~27 °C (DB)

  Outdoor units

  1) ZRUN**0G(L)SS0 (** : 03,04,05,06) : -20~24 °C (DB)

  2) ZRUN**0LSS0 (** : 08,10,12) : -20~18 °C (DB)

  3) ZRUM**0LTE6 (**: 08,10,12,14,16,18,20,22,24,26,28)
  : -25~18 °C (DB) (Simultaneous Operation : -10 ~16 °C (DB))

* The operating temperature range varies for each outdoor unit, please refer to the PDB for details.

The following safety guidelines are intended to prevent unforeseen risks or damage from unsafe or incorrect operation of the appliance. The guidelines are separated into 'WARNING' and 'CAUTION' as described below.

⚠ This symbol is displayed to indicate matters and operations that can cause risk. Read the part with this symbol carefully and follow the instructions in order to avoid risk.

⚠ WARNING

This indicates that the failure to follow the instructions can cause serious injury or death.

⚠ CAUTION

This indicates that the failure to follow the instructions can cause the minor injury or damage to the product.

⚠ WARNING

Installation

- Compliance with national gas regulations shall be observed.
- Do not use a defective or underrated circuit breaker. Use this appliance on a dedicated circuit.
  - There is risk of fire or electric shock.
- For electrical work, contact the dealer, seller, a qualified electrician, or an Authorized Service Center.
  - Do not disassemble or repair the product. There is risk of fire or electric shock.
- Always ground the product.
  - There is risk of fire or electric shock.
- Install the panel and the cover of control box securely.
  - There is risk of fire or electric shock.
- Always install a dedicated circuit and breaker.
  - Improper wiring or installation may cause fire or electric shock.
- Use the correctly rated breaker or fuse.
  - There is risk of fire or electric shock.
- Do not modify or extend the power cable.
  - There is risk of fire or electric shock.

- Do not install, remove, or re-install the unit by yourself (customer).
  - There is risk of fire, electric shock, explosion, or injury.
- Be cautious when unpacking and installing the product.
  - Sharp edges could cause injury. Be especially careful of the case edges and the fins on the condenser and evaporator.
- For installation, always contact the dealer or an Authorized Service Center.
  - There is risk of fire, electric shock, explosion, or injury.
- Do not install the product on a defective installation stand.
  - It may cause injury, accident, or damage to the product.
- Be sure the installation area does not deteriorate with age.
  - If the base collapses, the air conditioner could fall with it, causing property damage, product failure, and personal injury.
- Do not turn on the breaker or power under condition that front panel, cabinet, top cover, control box cover are removed or opened.
  - Otherwise, it may cause fire, electric shock, explosion or death.
- Use a vacuum pump or Inert (nitrogen) gas when doing leakage test or air purge. Do not compress air or Oxygen and Do not use Flammable gases. Otherwise, it may cause fire or explosion.
  - There is the risk of death, injury, fire or explosion.
- Have all electric work done by a licensed electrician according to "Electric Facility Engineering Standard" and "Interior Wire Regulations" and the instructions given in this manual and always use a special circuit.
  - If the power source capacity is inadequate or electric work is performed improperly, electric shock or fire may result.
- Always install a dedicated circuit and breaker.
  - Improper wiring or installation may cause fire or electric shock.
- The appliance shall be stored in an area where the room size corresponds to the room area as specified for operation. (for R32)
- Ducts connected to an appliance shall not contain a potential ignition source (for R32)
- The appliance shall be stored in a room without continuously operating open flames (for example an operating gas appliance) or other potential ignition sources. (for example an operating electric heater, hot surfaces)
- Keep any required ventilation openings clear of obstruction.

- Mechanical connections (mechanical connectors or flared joints) shall be accessible for maintenance purposes.
- To prevent the mixing of different types of refrigerants, be sure to check the type of refrigerant used in the outdoor unit.

- **Checks to the area**

  Prior to beginning work on systems containing flammable refrigerants, safety checks are necessary to ensure that the risk of ignition is minimised. For repair to the refrigerating system, the following precautions shall be complied with prior to conducting work on the system.

- **Work procedure**

  Work shall be undertaken under a controlled procedure so as to minimise the risk of a flammable gas or vapour being present while the work is being performed.

- **General work area**

  All maintenance staff and others working in the local area shall be instructed on the nature of work being carried out. Work in confined spaces shall be avoided.

- **Checking for presence of refrigerant**

  The area shall be checked with an appropriate refrigerant detector prior to and during work, to ensure the technician is aware of potentially flammable atmospheres. Ensure that the leak detection equipment being used is suitable for use with flammable refrigerants, i.e. non-sparking, adequately sealed or intrinsically safe.

- **Refrigerant removal and circuit evacuation**

  When breaking into the refrigerant circuit to make repairs – or for any other purpose – conventional procedures shall be used. However, for flammable refrigerants it is important that best practice is followed since flammability is a consideration.

The following procedure shall be adhered to:

- Safely remove refrigerant following local and national regulations;
- Evacuate;
- Purge the circuit with inert gas (optional for A2L);
- Evacuate (optional for A2L);
- Continuously flush with inert gas when using flame to open circuit;
- Open the circuit.

The refrigerant charge shall be recovered into the correct recovery cylinders.

The manufacturer shall specify the inert gases that can be used. Compressed air or oxygen shall not be used for purging refrigerant systems.

NOTE

An example of an inert gas is dry nitrogen.

Purging of the refrigerant circuit shall be achieved by breaking the vacuum in the system with inert gas and continuing to fill until the working pressure is achieved, then venting to atmosphere, and finally pulling down to a vacuum. This process shall be repeated until no refrigerant is within the system. The system shall be vented down to atmospheric pressure to enable work to take place.

Ensure that the outlet of the vacuum pump is not close to any potential ignition sources and that ventilation is available.

- **Ventilated area**

Ensure that the area is in the open or that it is adequately ventilated before breaking into the system or conducting any hot work. A degree of ventilation shall continue during the period that the work is carried out. The ventilation should safely disperse any released refrigerant and preferably expel it externally into the atmosphere.

- **Detection of flammable refrigerants**

Under no circumstances shall potential sources of ignition be used in the searching for or detection of refrigerant leaks.

A halide torch (or any other detector using a naked flame) shall not be used.

- **Leak detection methods**

The following leak detection methods are deemed acceptable for all refrigerant systems.

Electronic leak detectors may be used to detect refrigerant leaks but, in the case of flammable refrigerants, the sensitivity can be inadequate, or can need recalibration. (Detection equipment shall be calibrated in a refrigerant-free area.)

Ensure that the detector is not a potential source of ignition and is suitable for the refrigerant used. Leak detection equipment shall be set at a percentage of the LFL of the refrigerant and shall be calibrated to the refrigerant employed, and the appropriate percentage of gas (25 % maximum) is confirmed.

Leak detection fluids are also suitable for use with most refrigerants but the use of detergents containing chlorine shall be avoided as the chlorine can react with the refrigerant and corrode the copper pipe-work.

NOTE

Examples of leak detection methods are
- Bubble method,
- Fluorescent agent method.

If a leak is suspected, all naked flames shall be removed/extinguished.

If a leakage of refrigerant is found which requires brazing, all of the refrigerant shall be recovered from the system, or isolated (by means of shut-off valves) in a part of the system remote from the leak. Removal of refrigerant shall be according to Refrigerant removal and circuit evacuation proecdure.

- **Decommissioning**

Before carrying out this procedure, it is essential that the technician is completely familiar with the equipment and all its detail. It is recommended good practice that all refrigerants are recovered safely. Prior to the task being carried out, an oil and refrigerant sample shall be taken in case analysis is required prior to re-use of recovered refrigerant.

It is essential that electrical power is available before the task is commenced.

a) Become familiar with the equipment and its operation.

b) Isolate system electrically.

c) Before attempting the procedure ensure that: mechanical handling equipment is available, if required, for handling refrigerant cylinders

- All personal protective equipment is available and being used correctly
- The recovery process is supervised at all times by a competent person
- Recovery equipment and cylinders conform to the appropriate standards.

d) Pump down refrigerant system, if possible.

e) If a vacuum is not possible, make a manifold so that refrigerant can be removed from various parts of the system.

f) Make sure that cylinder is situated on the scales before recovery takes place.

g) Start the recovery machine and operate in accordance with manufacturer's instructions.

h) Do not overfill cylinders. (No more than 80 % volume liquid charge).

i) Do not exceed the maximum working pressure of the cylinder, even temporarily.

j) When the cylinders have been filled correctly and the process completed, make sure that the cylinders and the equipment are removed from site promptly and all isolation valves on the equipment are closed off.

k) Recovered refrigerant shall not be charged into another refrigerating system unless it has been cleaned and checked completed, make sure that the cylinders and the equipment are removed from site promptly and all isolation valves on the equipment are closed off.

- **Charging procedures**

In addition to conventional charging procedures, the following requirements shall be followed.

- Ensure that contamination of different refrigerants does not occur when using charging equipment. Hoses or lines shall be as short as possible to minimise the amount of refrigerant contained in them.
- Cylinders shall be kept in an appropriate position according to the instructions.
- Ensure that the refrigerating system is earthed prior to charging the system with refrigerant.
- Label the system when charging is complete (if not already labelled).
- Extreme care shall be taken not to overfill the refrigerating system.

Prior to recharging the system, it shall be pressure-tested with the appropriate purging gas. The system shall be leak-tested on completion of charging but prior to commissioning. A follow up leak test shall be carried out prior to leaving the site.

- **Labelling**

Equipment shall be labelled stating that it has been de-commissioned and emptied of refrigerant. The label shall be dated and signed. Ensure that there are labels on the equipment stating the equipment contains flammable refrigerant.

- **Recovery**

When removing refrigerant from a system, either for servicing or decommissioning, it is required to follow good practice so that all refrigerants are removed safely.

When transferring refrigerant into cylinders, ensure that only appropriate refrigerant recovery cylinders are employed.

Ensure that the correct number of cylinders for holding the total system charge is available.

All cylinders to be used are designated for the recovered refrigerant and labelled for that refrigerant (i.e. special cylinders for the recovery of refrigerant).

Cylinders shall be complete with pressure-relief valve and associated shut-off valves in good working order.

Empty recovery cylinders are evacuated and, if possible, cooled before recovery occurs.

The recovery equipment shall be in good working order with a set of instructions concerning the equipment that is at hand and shall be suitable for the recovery of the flammable refrigerant.

Consult manufacturer if in doubt. In addition, a set of calibrated weighing scales shall be available and in good working order. Hoses shall be complete with leak-free disconnect couplings and in good condition.

The recovered refrigerant shall be processed according to local legislation in the correct recovery cylinder, and the relevant waste transfer note arranged. Do not mix refrigerants in recovery units and especially not in cylinders.

If compressors or compressor oils are to be removed, ensure that they have been evacuated to an acceptable level to make certain that flammable refrigerant does not remain within the lubricant.

The compressor body shall not be heated by an open flame or other ignition sources to accelerate this process.

Draining of oil from a system shall be carried out safely

- **Presence of fire extinguisher**

  If any hot work is to be conducted on the refrigerating equipment or any associated parts, appropriate fire extinguishing equipment shall be available to hand. Have a dry powder or CO2 fire extinguisher adjacent to the charging area.

- **No ignition sources**

  No person carrying out work in relation to a refrigerating system which involves exposing any pipe work shall use any sources of ignition in such a manner that it can lead to the risk of fire or explosion.

  All possible ignition sources, including cigarette smoking, should be kept sufficiently far away from the site of installation, repairing, removing and disposal, during which refrigerant can possibly be released to the surrounding space.

  Prior to work taking place, the area around the equipment is to be surveyed to make sure that there are no flammable hazards or ignition risks. "No Smoking" signs shall be displayed.

- **Qualification of workers**

  The manual shall contain specific information about the required qualification of the working personnel for maintenance, service and repair operations. Every working procedure that affects safety means shall only be carried out by competent persons according to Annex HH.

  Examples for such working procedures are:

  - Breaking into the refrigerating circuit.
  - Opening of sealed components.
  - Opening of ventilated enclosures.

- This appliance incorporates an earth connection for functional purposes only.

- Pipe-work shall not be installed in an unventilated space, if that space is smaller than Amin in IEC 60335-2-40: 2022 Annex GG, except for A2L refrigerants where installed pipe-work has no connecting joints or is connected with at least one of the following:
  i) Joints in compliance with ISO 14903,
  ii) Joints in enclosures which vent to the unit or to the outside,
  iii) Joints in enclosures which vent to a room with a room area of at least A_{min} as specified in IEC 60335-2-40: 2022 Annex GG.2.1.

- Information that the refrigerant detection system refrigerant sensors shall only be replaced with refrigerant sensors specified by the appliance manufacturer.
- For appliances with a leak detection system, safety shut-off valves shall not be reset until the room has been ventilated, because resetting can result in additional flammable refrigerant released into the space.
- Connected via an air duct system to one or more rooms, the supply and return air shall be directly ducted to the space. Open areas such as false ceilings shall not be used as a return air duct.
- Where field installed safety shut-off valves are specified for refrigerating systems, a warning that only safety shut-off valves specified by the appliance manufacturer shall be used.
- Information that safety shut-off valves shall only be replaced with valves specified by the appliance manufacturer.
- Where remote refrigerant detection systems are specified, a warning that only refrigerant sensors specified by the appliance manufacturer may be used
- The appliance shall be installed in accordance with the national wiring regulation.
- Electrical components shall only be replaced with parts specified by the appliance manufacturer. Replacement with other parts may result in the ignition of refrigerant in the event of a leak
- Servicing shall be performed only as recommended by the manufacturer.
- The installation instructions for appliances that are intended to be permanently connected to fixed wiring, and have a leakage current not exceeding 10 mA, shall state that the installation of a residual current device (RCD) having a rated residual operating current not exceeding 30 mA is advisable.

- Solenoid valves shall not block in liquid refrigerant unless adequate relief is provided to the refrigerant system low pressure side.
- A warning that if appliances with A2L refrigerants connected via an air duct system to one or more rooms are installed in a room with an area less than Amin as determined in standard (Clause GG.2), that room shall be without continuously operating open flames (for example an operating gas appliance) or other potential ignition sources (for example an operating electric heater, hot surfaces). A flame-producing device may be installed in the same space if the device is provided with an effective flame arrest;
- Field-made refrigerant joints indoors shall be tightness tested. The test method shall have a sensitivity of 5 grams per year of refrigerant or better under a pressure of at least 0,25 times the maximum allowable pressure. No leak shall be detected.
- A warning that solenoid valves shall be correctly positioned in the piping to avoid hydraulic shock and shall not block in liquid refrigerant unless adequate relief is provided.
- Protection devices, piping and fittings shall be protected as far as possible against adverse environmental effects, for example, the danger of water collecting and freezing in relief pipes or the accumulation of dirt and debris.
- Precautions shall be taken to avoid excessive vibration or pulsation to refrigerating piping.
- Piping in refrigerating systems shall be so designed and installed to minimize the likelihood hydraulic shock damaging the system.
- Provision shall be made for expansion and contraction of long runs of piping.
- Steel pipes and components shall be protected against corrosion with a rustproof coating before applying any insulation.
- Auxiliary devices which may be a potential ignition source shall not be installed in the duct work. Examples of such potential ignition sources are hot surfaces with a temperature exceeding X °C and electric switching devices.

NOTE X is the maximum allowable surface temperature.
ex.) R32 : 700 °C

- Only auxiliary devices approved by the appliance manufacturer or declared suitable with the refrigerant shall be installed in connecting ductwork. The manufacturer can list in the instructions all approved auxiliary devices by the manufacturer and model number for use with the specific appliance.

Operation

- Do not let the air conditioner run for a long time when the humidity is very high and a door or a window is left open.
  - Moisture may condense and wet or damage furniture.
- Take care to ensure that power cable could not be pulled out or damaged during operation.
  - There is risk of fire or electric shock.
- Do not place anything on the power cable.
  - There is risk of fire or electric shock.
- Do not plug or unplug the power supply plug during operation.
  - There is risk of fire or electric shock.
- Do not touch(operate) the product with wet hands.
  - There is risk of fire or electrical shock.
- Do not place a heater or other appliances near the power cable.
  - There is risk of fire and electric shock.
- Do not allow water to run into electric parts.
  - There is risk of fire, failure of the product, or electric shock.
- Do not store or use flammable gas or combustibles near the product.
  - There is risk of fire or failure of product.
- Do not use the product in a tightly closed space for a long time.
  - Oxygen deficiency could occur.
- When flammable gas leaks, turn off the gas and open a window for ventilation before turn the product on.
  - Do not use the telephone or turn switches on or off. There is risk of explosion or fire.
- If strange sounds, smell or smoke comes from product. Turn the breaker off or disconnect the power supply cable.
  - There is risk of electric shock or fire.

- Stop operation and close the window in storm or hurricane. If possible, remove the product from the window before the hurricane arrives.
  - There is risk of property damage, failure of product, or electric shock.
- Do not open the inlet grill of the product during operation. (Do not touch the electrostatic filter, if the unit is so equipped.)
  - There is risk of physical injury, electric shock, or product failure.
- When the product is soaked (flooded or submerged), contact an Authorized Service Center.
  - There is risk of fire or electric shock.
- Be cautious that water could not enter the product.
  - There is risk of fire, electric shock, or product damage.
- Ventilate the product from time to time when operating it together with a stove, etc.
  - There is risk of fire or electric shock.
- Turn the main power off when cleaning or maintaining the product.
  - There is risk of electric shock.
- When the product is not be used for a long time, disconnect the power supply plug or turn off the breaker.
  - There is risk of product damage or failure, or unintended operation.
- Take care to ensure that nobody could step on or fall onto the outdoor unit.
  - This could result in personal injury and product damage.
- When mechanical connectors are reused indoors, sealing parts shall be renewed.
- When flared joints are reused indoors, the flare part shall be re-fabricated.
- Periodic (more than once/year) cleaning of the dust or salt particles stuck on the heat exchanger by using water.
- Do not use means to accelerate the defrosting process or to clean, other than those recommended by the manufacturer.
- Do not pierce or burn refrigerant cycle part.
- Be aware that refrigerants might not contain an odour.

⚠ CAUTION

Installation

- Always check for gas (refrigerant) leakage after installation or repair of product.
  - Low refrigerant levels may cause failure of product.
- Install the drain hose to ensure that water is drained away properly.
  - A bad connection may cause water leakage.
- Keep level even when installing the product.
  - To avoid vibration or water leakage.
- Do not install the product where the noise or hot air from the outdoor unit could damage the neighborhoods.
  - It may cause a problem for your neighbors.
- Use two or more people to lift and transport the product.
  - Avoid personal injury.
- Do not install the product where it will be exposed to sea wind (salt spray) directly.
  - It may cause corrosion on the product. Corrosion, particularly on the condenser and evaporator fins, could cause product malfunction or inefficient operation.
- Any person who is involved with working on or breaking into a refrigerant circuit should hold a current valid certificate from an industry-accredited assessment authority, which authorises their competence to handle refrigerants safely in accordance with an industry recognised assessment specification.
- The appliance shall be stored so as to prevent mechanical damage from occurring.
- Refrigerant tubing shall be protected or enclosed to avoid damage.
- Flexible refrigerant connectors (such as connecting lines between the indoor and outdoor unit) that can be displaced during normal operation shall be protected against mechanical damage.
- The installation of pipe-work shall be kept to a minimum.
- Pipe-work shall be securely mounted and guarded from physical damage.

- A brazed, welded, or mechanical connection shall be made before opening the valves to permit refrigerant to flow between the refrigerating system parts. A vacuum valve shall be provided to evacuate the interconnecting pipe and/or any uncharged refrigerating system part.
- Dismantling the unit, treatment of the refrigerant oil and eventual parts should be done in accordance with local and national standards.
- Do not install the unit in potentially explosive atmospheres.
- This unit is equipped with a leak detection system for safety. For leak detection to be effective, the unit must be electrically powered at all times after installation, other than when servicing.
- This unit is equipped with electrically powered safety measures. For the safety measures to be effective, the unit must be electrically powered at all times after installation, other than when servicing.

Operation

- Do not expose the skin directly to cool air for long periods of time. (Don't sit in the draft.)
  - This could harm to your health.
- Do not use the product for special purposes, such as preserving foods, works of art, etc. It is a consumer air conditioner, not a precision refrigeration system.
  - There is risk of damage or loss of property.
- Do not block the inlet or outlet of air flow.
  - It may cause product failure.
- Use a soft cloth to clean. Do not use harsh detergents, solvents, etc.
  - There is risk of fire, electric shock, or damage to the plastic parts of the product.
- Do not touch the metal parts of the product when removing the air filter. They are very sharp!
  - There is risk of personal injury.
- Do not step on or put anything on the product. (outdoor units)
  - There is risk of personal injury and failure of product.

- Always insert the filter securely. Clean the filter every two weeks or more often if necessary.
  - A dirty filter reduces the efficiency of the air conditioner and could cause product malfunction or damage.
- Do not insert hands or other objects through the air inlet or outlet while the product is operated.
  - There are sharp and moving parts that could cause personal injury.
- Do not drink the water drained from the product.
  - It is not sanitary and could cause serious health issues.
- Use a firm stool or ladder when cleaning or maintaining the product.
  - Be careful and avoid personal injury.
- Replace the all batteries in the remote control with new ones of the same type. Do not mix old and new batteries or different types of batteries.
  - There is risk of fire or explosion.
- Do not recharge or disassemble the batteries. Do not dispose of batteries in a fire.
  - They may burn or explode.
- If the liquid from the batteries gets onto your skin or clothes, wash it well with clean water. Do not use the remote if the batteries have leaked.
  - The chemicals in batteries could cause burns or other health hazards.
- If you eat the liquid from the batteries, brush your teeth and see doctor. Do not use the remote if the batteries have leaked.
  - The chemicals in batteries could cause burns or other health hazards.
- Servicing shall only be performed as recommended by the equipment manufacturer. Maintenance and repair requiring the assistance of other skilled personnel shall be carried out under the supervision of the person competent in the use of flammable refrigerants.
- Means for disconnection must be incorporated in the fixed wiring in accordance with the wiring rules.
- If the supply cord is damaged, it must be replaced by the manufacturer, its service agent or similarly qualified persons in order to avoid a hazard.

Installation

Minimum floor area

All indoor units should be installed satisfying A, TA, or VA is larger than A_{min}.

Flow Chart

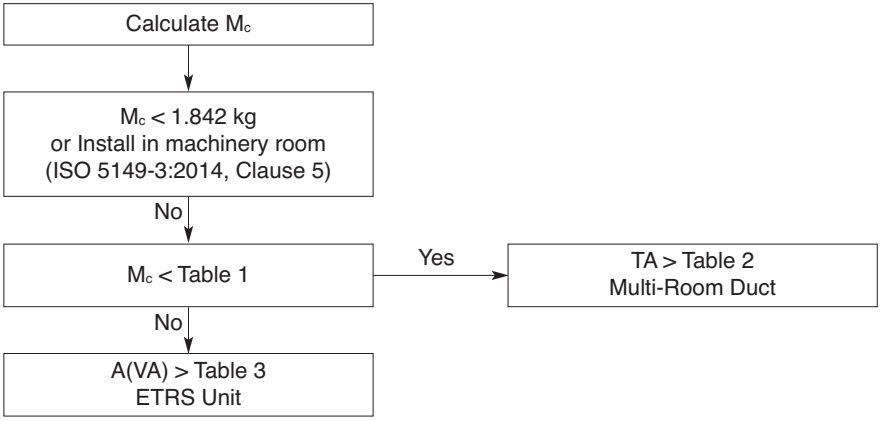

M_c Total amount of refrigerant in the system (kg)

A Floor Area (smallest room area connected via duct system)

TA Total Floor Area (Sum of room area connected via duct system)

VA Ventilated Floor Area (Sum of room area connected by natural ventilation)

A_{min} Minimum Floor Area (Find in the table 2 or 3)

Minimum installation height for ducted indoor unit is 2.2 m

Calculate Total amount of refrigerant in the system

The calculation of total amount of refrigerant in the system should take into account the length of pipe, CF (correction Factor) value of indoor units, number of indoor HR units, and base charge of outdoor units. CF is guided on outdoor unit.

Additional charge (kg)	=	Total liquid pipe : Ø 25.4 mm	× 0.422 (kg/m)
	+	Total liquid pipe : Ø 22.2 mm	× 0.313 (kg/m)
	+	Total liquid pipe : Ø 19.05 mm	× 0.235 (kg/m)
	+	Total liquid pipe : Ø 15.88 mm	× 0.153 (kg/m)
	+	Total liquid pipe : Ø 12.7 mm	× 0.103 (kg/m)
	+	Total liquid pipe : Ø 9.52 mm	× 0.053 (kg/m)
	+	Total liquid pipe : Ø 6.35 mm	× 0.019 (kg/m)
	+	Number of installed HR units (2,3,4 port)	× 0.45 (kg)
	+	Number of installed HR units (6,8 port)	× 0.9 (kg)
	+	CF Value of indoor units	
	+	Base charge of outdoor units	

Minimum floor area for Multi-Room Duct

If M_c is smaller than Maximum charge, floor area can be replaced by total floor area. Find flow rate of high mode in PDB (Product Data Book) or Service Manual of indoor unit.

Flow Rate of High mode	Maximum Charge
Unit : CMM	Unit : kg
9.0	2.77
9.5	2.92
10.0	3.07
10.5	3.23
11.0	3.38
11.5	3.54
12.0	3.69
12.5	3.84
13.0	4.00
13.5	4.15
14.0	4.30
14.5	4.46
15.0	4.61
15.5	4.76
16.0	4.92
16.5	5.07
17.0	5.22
17.5	5.38
18.0	5.53
18.5	5.68
19.0	5.84
19.5	5.99
20.0	6.14
20.5	6.30
21.0	6.45
21.5	6.61
22.0	6.76
22.5	6.91
23.0	7.07
23.5	7.22
24.0	7.37
24.5	7.53
25.0	7.68
25.5	7.83
26.0	7.99
26.5	8.14
27.0	8.29
27.5	8.45
28.0	8.60
28.5	8.75
29.0	8.91
29.5	9.06
30.0	9.21
30.5	9.37

Flow Rate of High mode	Maximum Charge
Unit : CMM	Unit : kg
31.0	9.52
31.5	9.68
32.0	9.83
32.5	9.98
33.0	10.14
33.5	10.29
34.0	10.44
34.5	10.60
35.0	10.75
35.5	10.90
36.0	11.06
36.5	11.21
37.0	11.36
37.5	11.52
38.0	11.67
38.5	11.82
39.0	11.98
39.5	12.13
40.0	12.28
40.5	12.44
41.0	12.59
41.5	12.75
42.0	12.90
42.5	13.05
43.0	13.21
43.5	13.36
44.0	13.51
44.5	13.67
45.0	13.82
45.5	13.97
46.0	14.13
46.5	14.28
47.0	14.43
47.5	14.59
48.0	14.74
48.5	14.89
49.0	15.05
49.5	15.20
50.0	15.35
50.5	15.51
51.0	15.66
51.5	15.82
52.0	15.97
52.5	16.12

Flow Rate of High mode	Maximum Charge
Unit : CMM	Unit : kg
53.0	16.28
53.5	16.43
54.0	16.58
54.5	16.74
55.0	16.89
55.5	17.04
56.0	17.20
56.5	17.35
57.0	17.50
57.5	17.66
58.0	17.81
58.5	17.96
59.0	18.12
59.5	18.27
60.0	18.42
60.5	18.58
61.0	18.73
61.5	18.89
62.0	19.04
62.5	19.19
63.0	19.35
63.5	19.50
64.0	19.65
64.5	19.81
65.0	19.96
65.5	20.11
66.0	20.27
66.5	20.42
67.0	20.57
67.5	20.73
68.0	20.88
68.5	21.03
69.0	21.19
69.5	21.34
70.0	21.49
70.5	21.65
71.0	21.80
71.5	21.96
72.0	22.11

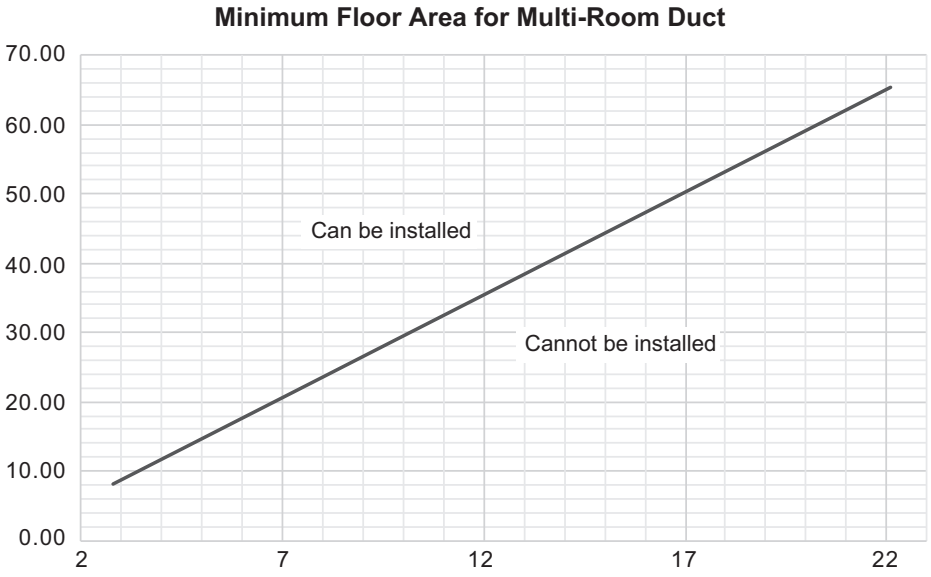

M_c	A_{min}
Unit : kg	Unit : m^2
2.77	8.21
3.00	8.89
4.00	11.85
5.00	14.81
6.00	17.77
7.00	20.73
8.00	23.69
9.00	26.66
10.00	29.62
11.00	32.58
12.00	35.54
13.00	38.50
14.00	41.46
15.00	44.42
16.00	47.38
17.00	50.35
18.00	53.31
19.00	56.27
20.00	59.23
21.00	62.19
22.11	65.48

Minimum floor area for ETRS Unit

To install indoor unit, some safety device may be needed depend on area or ventilated floor area (when natural ventilation used). Maximum charge of the system is 15.964 kg x number of indoor units in the system, not exceed 63.856 kg. Safety devices are LG alarm kit (PLDCAA0S), LG Shut off valve (PRHPZ0*0) and natural ventilation. For more detail for LG accessories (alarm kit, shut off vale), see accessories manual.

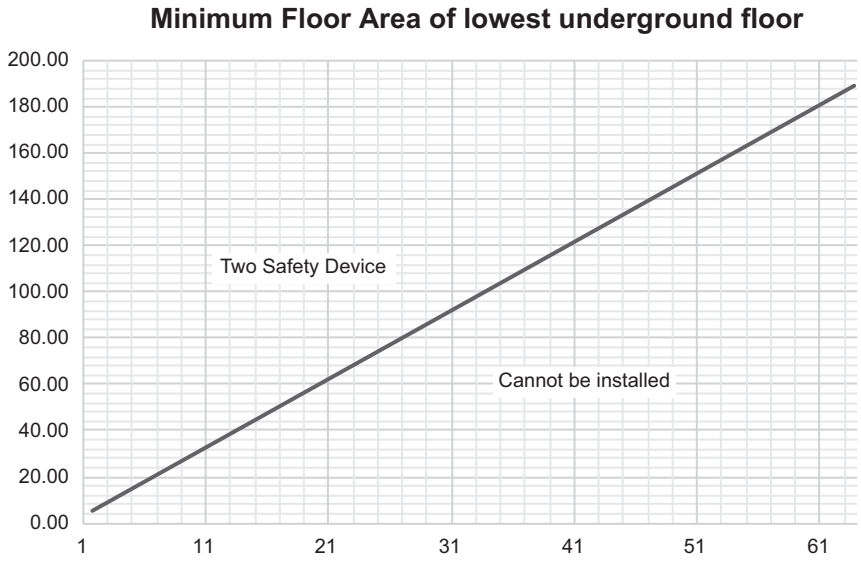

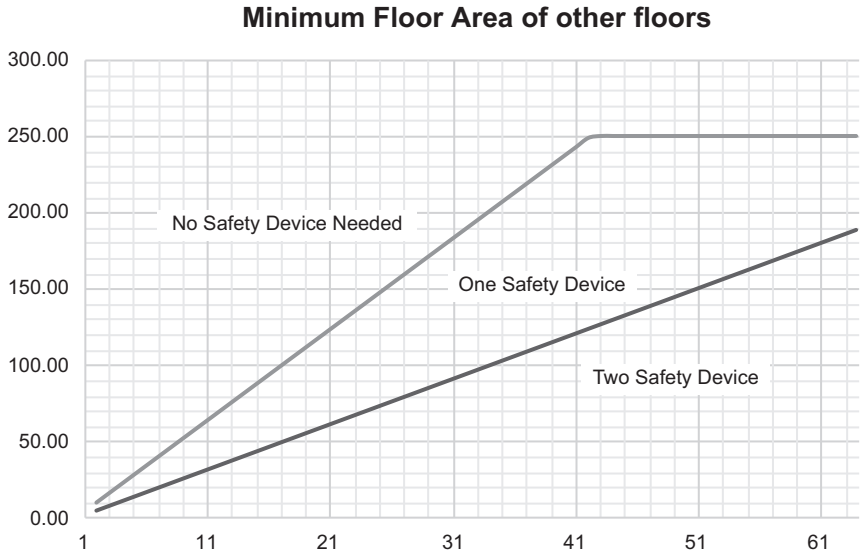

M_c (kg)	A_{min}			
	Other Floors			Lowest Underground Floor
	Number of safety device			
	2	1	0	2
1.843	No Limit	5.46	10.92	5.46
2		5.93	11.85	5.93
3		8.89	17.77	8.89
4		11.85	23.69	11.85
5		14.81	29.62	14.81
6		17.77	35.54	17.77
7		20.73	41.46	20.73
8		23.69	47.38	23.69
9		26.66	53.31	26.66
10		29.62	59.23	29.62
11		32.58	65.15	32.58
12		35.54	71.07	35.54
13		38.50	77.00	38.50
14		41.46	82.92	41.46
15		44.42	88.84	44.42
16		47.38	94.76	47.38
17		50.35	100.69	50.35
18		53.31	106.61	53.31
19		56.27	112.53	56.27
20		59.23	118.45	59.23
21		62.19	124.38	62.19
22		65.15	130.30	65.15
23		68.11	136.22	68.11
24		71.07	142.14	71.07
25		74.04	148.07	74.04
26		77.00	153.99	77.00
27		79.96	159.91	79.96
28		82.92	165.83	82.92
29		85.88	171.76	85.88
30		88.84	177.68	88.84
31		91.80	183.60	91.80
32		94.76	189.52	94.76

M_c (kg)	A_{min}			
	Other Floors			Lowest Underground Floor
	Number of safety device			
	2	1	0	2
1.843	No Limit	97.72	195.44	97.72
2		100.69	201.37	100.69
3		103.65	207.29	103.65
4		106.61	213.21	106.61
5		109.57	219.13	109.57
6		112.53	225.06	112.53
7		115.49	230.98	115.49
8		118.45	236.90	118.45
9		121.41	242.82	121.41
10		124.38	248.75	124.38
11		127.34	250.00	127.34
12		130.30	250.00	130.30
13		133.26	250.00	133.26
14		136.22	250.00	136.22
15		139.18	250.00	139.18
16		142.14	250.00	142.14
17		145.10	250.00	145.10
18		148.07	250.00	148.07
19		151.03	250.00	151.03
20		153.99	250.00	153.99
21		156.95	250.00	156.95
22		159.91	250.00	159.91
23		162.87	250.00	162.87
24		165.83	250.00	165.83
25		168.79	250.00	168.79
26		171.76	250.00	171.76
27		174.72	250.00	174.72
28		177.68	250.00	177.68
29		180.64	250.00	180.64
30		183.60	250.00	183.60
31		186.56	250.00	186.56
32		189.10	250.00	189.10

Natural Ventilatoin

When apply Natural Ventilation as Safety Device, A can be replaced VA. Natural Ventilation as safety device should satisfy the conditions below.

For the lower opening:

- It is not an opening to the outside
- The opening cannot be closed
- The opening must be ≥ 0.013 m² (Anv_{min})
- The area of any openings above 300 mm from the floor does not count when determining Anv_{min}
- At least 50% of Anv_{min} is less than 200 mm above the floor
- The bottom of the lower opening is ≤100 mm from the floor
- The height of the opening is ≥ 20 mm

For the upper opening:

- It is not an opening to the outside
- The opening cannot be closed
- The opening must be ≥ 0.0065 m² (50% of Anv_{min})
- The bottom of the upper opening must be ≥ 1 500 mm above the loor
- The height of the opening is ≥ 20 mm

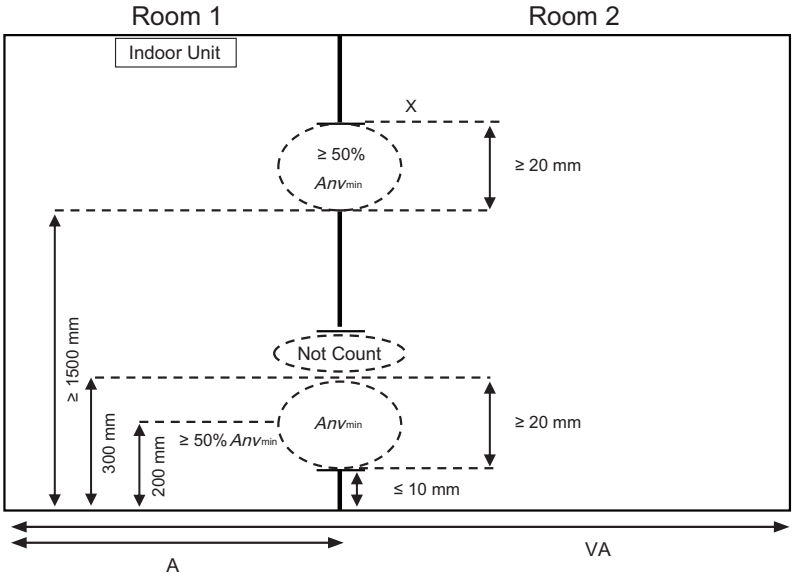

Selection of the best location (Low Static)

Indoor unit

Install the air conditioner in the location that satisfies the following conditions.

- The place shall easily bear a load exceeding four times the indoor unit's weight.
- The place shall be able to inspect the unit as the figure.
- The place where the unit shall be leveled.
- The place shall easily connect with the outdoor unit.
- The place where the unit is not affected by an electrical noise.
- The place where air circulation in the room will be good.
- There should not be any heat source or steam near the unit

Confirm the positional relationship between the unit and suspension bolts.

- Installation the ceiling opening to clean the filter or service under the product.

(Unit: mm)

Capacity (kBtu/h)	A	B
5/7/9	800	800
12/15/18	800	1 000
21/24	800	1 200

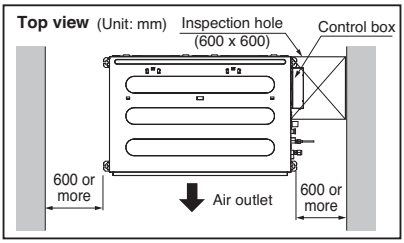

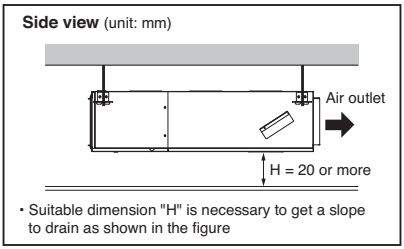

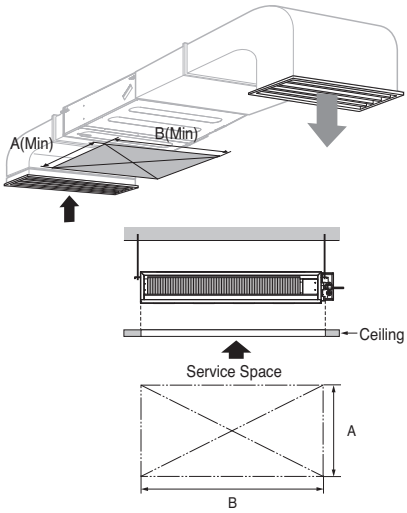

Selection of the best location (Mid / High Static)

Install the air conditioner in the location that satisfies the following conditions.

- The place shall easily bear a load exceeding four times the indoor unit's weight.
- The place shall be able to inspect the unit as the figure.
- The place where the unit shall be leveled.
- The place shall allow easy water drainage.
  (Suitable dimension "H" is necessary to get a slope to drain as figure.)
- The place shall easily connect with the outdoor unit.
- The place where the unit is not affected by an electrical noise.
- The place where air circulation in the room will be good .
- There should not be any heat source or steam near the unit.

Mid Static

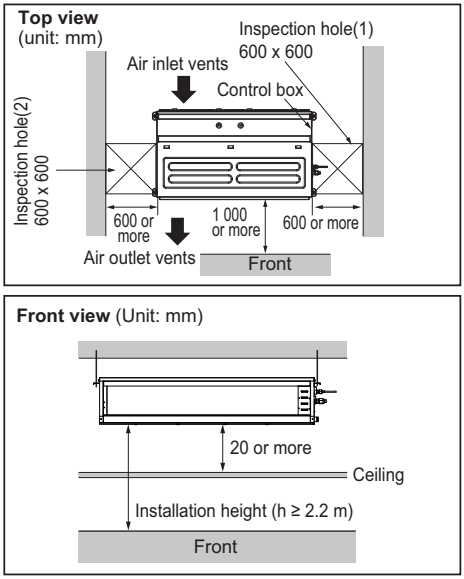

High Static

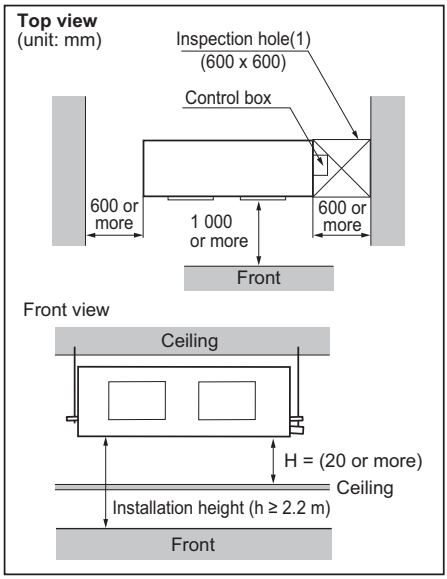

⚠ CAUTION

In case that the unit is installed near the sea, the installation parts may be corroded by salt, The installation parts (and the unit) should be taken appropriate anti-corrosion measures.

[Inspection Hole Standard]

Number of inspection hole	Distance between false ceiling & actual ceiling	Remarks
1	More than 100 cm	Sufficient space in the ceiling for servicing.
2	20 cm to 100 cm	Insufficient space. Difficult for servicing
Hole size should be more than the size of IDU.	Less than 20 cm	Minimum height for motor replacement.

Ceiling dimension and hanging bolt location (Low Static)

Installation of Unit

Install the unit above the ceiling correctly.

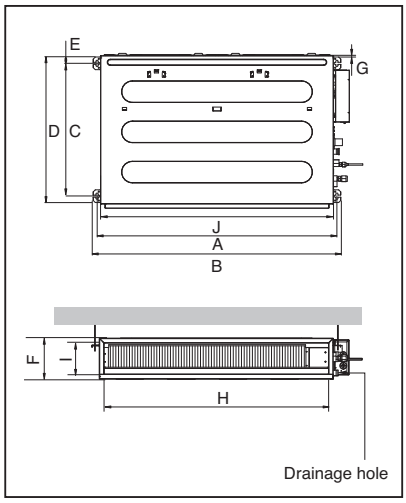

POSITION OF SUSPENSION BOLT

- Apply a joint-canvas between the unit and duct to absorb unnecessary vibration.
- Apply a filter Accessory at air return hole.

(Unit:mm)

Dimension / Capacity(kBtu/h)	A	B	C	D	E	F	G	H	I	J
L1	733	772	628	700	36	190	20	660	155	700
L2	933	972	628	700	36	190	20	860	155	900
L3	1 133	1 172	628	700	36	190	20	1 060	155	1 100

※ Install the unit leaning to a drainage hole side as a figure for easy water drainage.

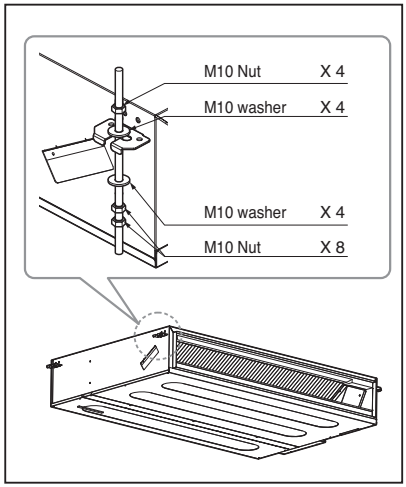

POSITION OF CONSOLE BOLT

- A place where the unit will be leveled and that can support the weight of the unit.
- A place where the unit can withstand its vibration.
- A place where service can be easily performed.

Ceiling dimension and hanging bolt location (Mid Static)

■ **Installation of Unit**

Install the unit above the ceiling correctly.

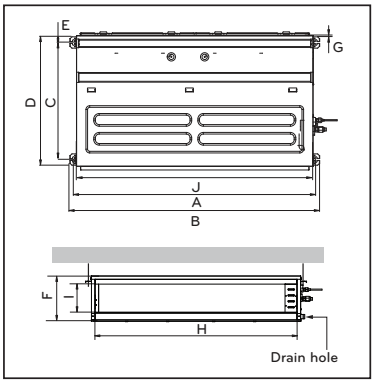

POSITION OF SUSPENSION BOLT

- Apply a joint-canvas between the unit and duct to absorb unnecessary vibration.
- Install the unit leaning to a drainage hole side as a figure for easy water drainage.
- A place where the unit will be leveled and that can support the weight of the unit.
- A place where the unit can withstand its vibration.
- A place where service can be easily performed.

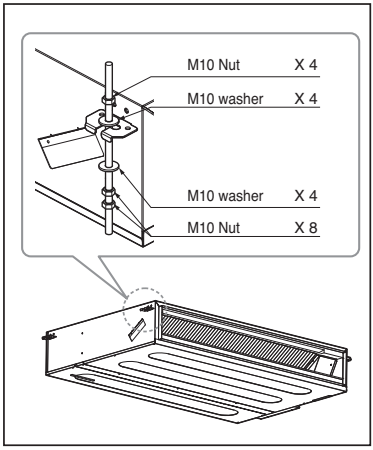

(Unit:mm)

Dimension / Chassis name	A	B	C	D	E	F	G	H	I	J
M1	933.4	971.6	619.2	700	30	270	15.2	858	201.4	900
M2	1 283.4	1 321.6	619.2	700	30	270	15.2	1 208	201.4	1 250
M3	1 283.4	1 321.6	619.2	700	30	360	15.2	1 208	291.4	1 250

NOTE

- Throughly study the following installation locations:

1. In such places as restaurants and kitchens, considerable amount of oil steam and flour adhere to the fan, the fin of the heat exchanger, resulting in heat exchange reduction, spraying, dispersing of water drops, etc. In these cases, take the following actions:
   - Make sure that the ventilation fan for smoke-collecting hood on a cooking table has sufficient capacity so that it draws oily steam which should not flow into the suction of the air conditioner.
   - Make enough distance from a cooking room to install the air conditioner in such a place where it may not suck in oil steam.
2. Avoid installing air conditioner in such circumstances where cutting oil mist or iron powder is in suspension in factories, etc.
3. Avoid places where inflammable gas is generated, flows in, is stored or vented.
4. Avoid places where sulfurous acid gas or corrosive gas is generated.
5. Avoid places near high frequency generators.

Ceiling dimension and hanging bolt location (High Static)

■ Installation of Unit

Install the unit above the ceiling correctly.

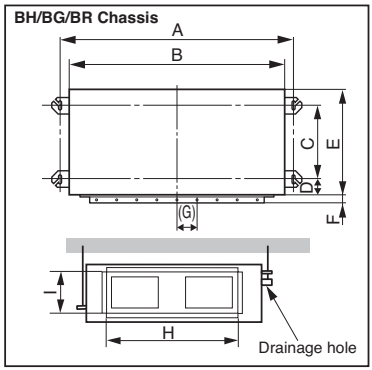

CASE 1

POSITION OF SUSPENSION BOLT

- Apply a joint-canvas between the unit and duct to absorb unnecessary vibration.

(Unit:mm)

Chassis \ Dimension	A	B	C	D	E	F	(G)	H	I
BH	932	882	355	47	450	30	87	750	158
BG	1 232	1 182	355	47	450	30	87	830	186
BR	1 282	1 230	477	56	590	30	120	1 006	294

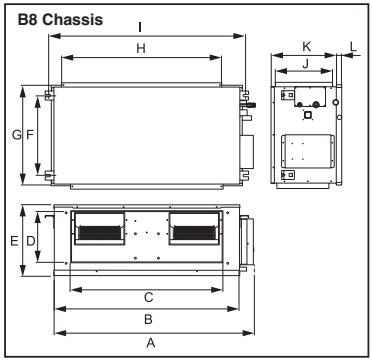

(Unit:mm)

Chassis \ Dimension	A	B	C	D	E	F	G	H	I	J	K	L
B8	1 680	1 565	1 160	330	460	580	700	1 400	1 635	390	445	15

CASE 2

- Install the unit leaning to a drainage hole side as a figure for easy water drainage.

POSITION OF CONSOLE BOLT

- A place where the unit will be leveled and that can support the weight of the unit.
- A place where the unit can withstand its vibration.
- A place where service can be easily performed.

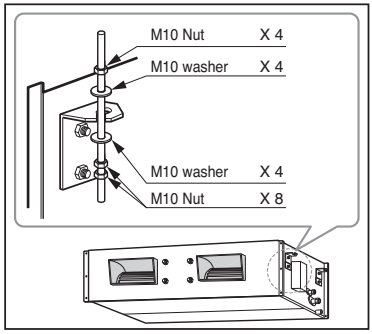

NOTE

- Throughly study the following installation locations:

1. In such places as restaurants and kitchens, considerable amount of oil steam and flour adhere to the fan, the fin of the heat exchanger, resulting in heat exchange reduction, spraying, dispersing of water drops, etc.
   In these cases, take the following actions:
   - Make sure that the ventilation fan for smoke-collecting hood on a cooking table has sufficient capacity so that it draws oily steam which should not flow into the suction of the air conditioner.
   - Make enough distance from a cooking room to install the air conditioner in such a place where it may not suck in oil steam.
2. Avoid installing air conditioner in such circumstances where cutting oil mist or iron powder is in suspension in factories, etc.
3. Avoid places where inflammable gas is generated, flows in, is stored or vented.
4. Avoid places where sulfurous acid gas or corrosive gas is generated.
5. Avoid places near high frequency generators.

Indoor Unit Installation

- Select and mark the position for fixing bolts.
- Drill the hole for set anchor on the face of ceiling.

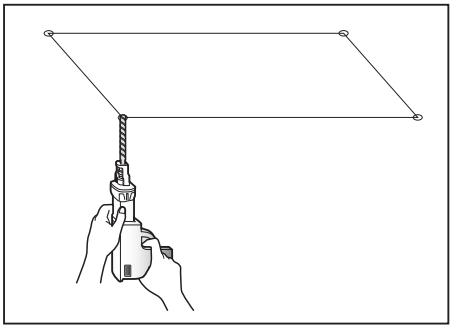

- Insert the set anchor and washer onto the suspension bolts for locking the suspension bolts on the ceiling.
- Mount the suspension bolts to the set anchor firmly.
- Secure the installation plates onto the suspension bolts (adjust level roughly) using nuts, washers and spring washers.

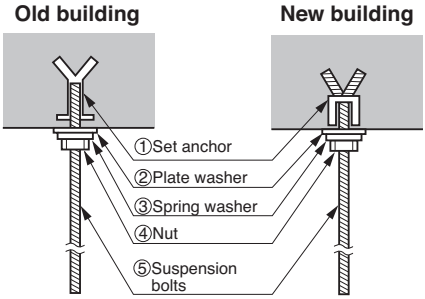

⚠ CAUTION

Tighten the nut and bolt to prevent unit falling.

Wiring Connection

Connect the wires to the terminals on the control board individually according to the outdoor unit connection.

- Ensure that the color of the wires of outdoor unit and the terminal No. are the same as those of indoor unit respectively.

Low Static

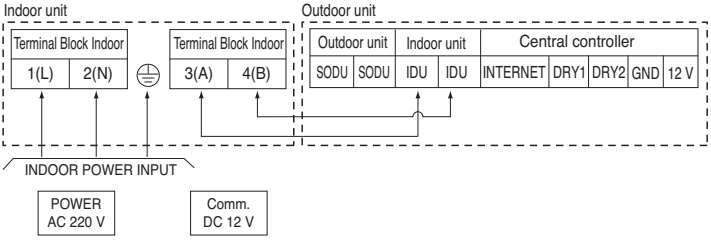

Mid Static

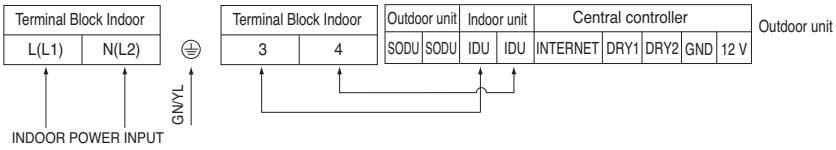

High Static

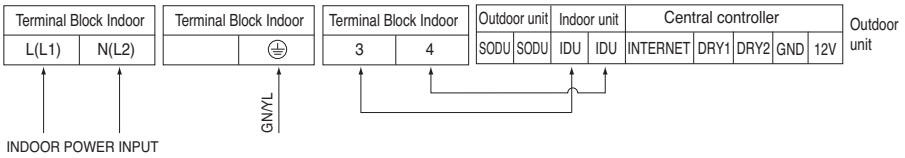

- Power Cable: CV 1.5 x 3C

⚠ WARNING

Make sure that the screws of the terminal are free from looseness.

Clamping of cables

1) Arrange 2 power cables on the control panel.
2) First, fasten the steel clamp with a screw to the inner boss of control panel.
3) For the cooling model, fix the other side of the clamp with a screw strongly. For the heat pump model, put the 0.75 mm^2 cable(thinner cable) on the clamp and tighten it with a plastic clamp to the other boss of the control panel.

⚠ CAUTION

The Power cord connected to the unit should be selected according to the following specifications.

❉ Pipes and wires should be purchased separately for installation of the product.

Electric Characteristics

- Recommended circuit breaker is ELCB
- MFA is used to select the circuit breaker and ground fault circuit interrupter
- Refer to the PDB about detail electric characteristics

ELCB : Earth Leakage Circuit Breaker
MFA : Maximum Fuse Amperes(A)
PDB : Product Data Book

⚠ CAUTION

The connecting cable connected to the indoor and outdoor unit should be complied with the following specifications (Rubber insulation, type H05RN-F approved by HAR or SAA).

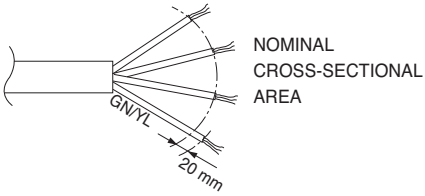

Rated current of appliance (A)			Nominal cross-sectional area (mm^2)
		≤ 0.2	Tinsel cord
> 0.2	and	≤ 3	0.5
> 3	and	≤ 6	0.75
> 6	and	≤ 10	1.0 (0.75)
> 10	and	≤ 16	1.5 (1.0)
> 16	and	≤ 25	2.5
> 25	and	≤ 32	4
> 32	and	≤ 40	6
> 40	and	≤ 63	10

NOTE For supply cords supplied with multi-phase appliances, the nominal cross-sectional area of the conductors is based on the maximum cross-sectional area of the conductors per phase at the supply cord connection to the appliance terminals.

INSULATION, OTHERS

Insulate the joint and tubes completely.

THERMAL INSULATION All thermal insulation must comply with local requirement.

INDOOR UNIT

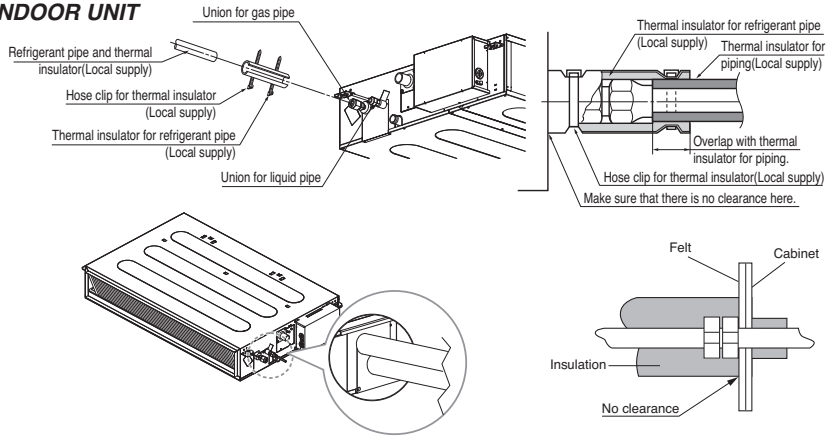

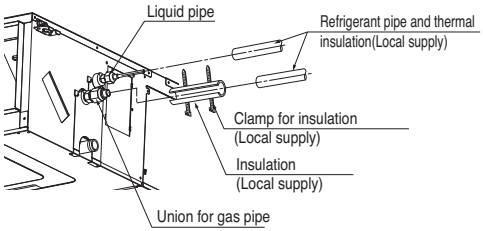

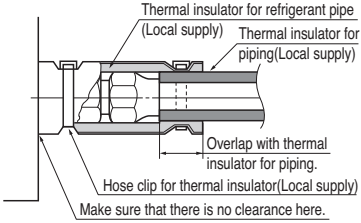

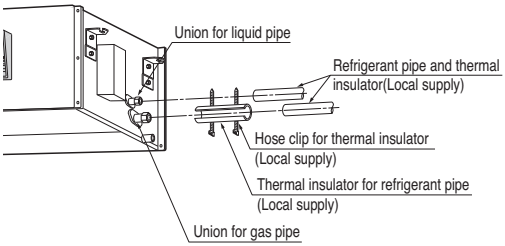

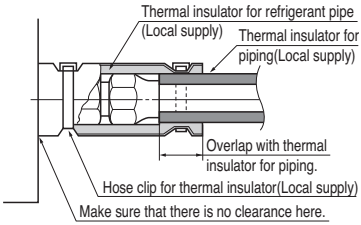

TEST AND CHECK

■ ***After all workings are finished, check the working and operation.***

- Air distribution ..... Is the air circulation good?
- Drain ..... Is the drainage smoothly and no sweating?
- Gas leakage ..... Is the piping connection correctly?
- Wiring ..... Is the wiring connection correctly?
- Lock-bolt ..... Is the lock-bolt of compressor loosened?
- Insulation..... Is the unit fully insulated?
- Ground ..... Is the unit safely grounded?

Checking the Drainage

1. Remove the Air Filter.

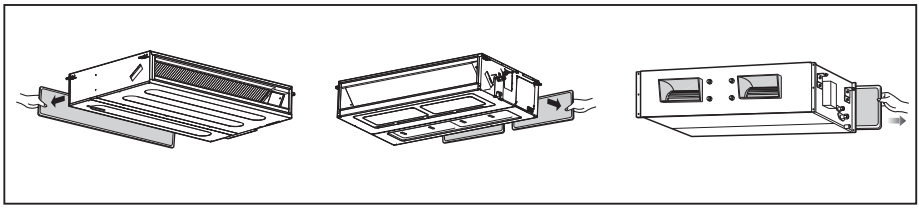

2. Check the drainage.

- Spray one or two glasses of water upon the evaporator.
- Ensure that water flows drain hose of indoor unit without any leakage.

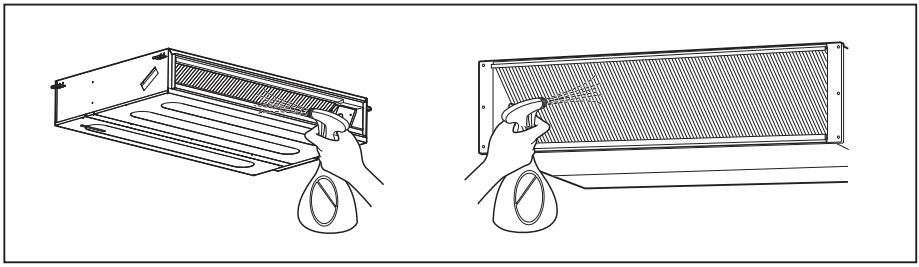

⚠ CAUTION

1. **Install declination** of the indoor unit is very **important for the drain** of the duct type air conditioner.
2. Minimum thickness of the insulation for the connecting pipe shall be 19 mm.

Front of view

- The unit must be horizontal or declined to the drain hose connected when finished installation.

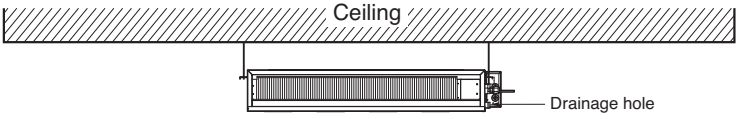

Drain Pump use

Drain Piping

- Drain piping must have down-slope (1/50 to 1/100): be sure not to provide up-and-down slope to prevent reversal flow.
- During drain piping connection, be careful not to exert extra force on the drain port on the indoor unit.
- The outside diameter of the drain connection on the indoor unit is 32 mm.

Piping material: Polyvinyl chloride pipe VP-25 and pipe fittings

- Be sure to install heat insulation on the drain piping.

Heat insulation material: Polyethylene foam with thickness more than 8 mm.

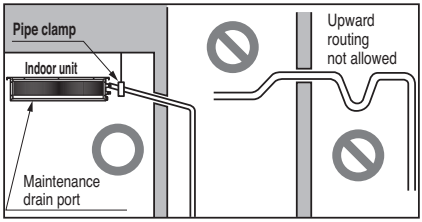

Drain test

The air conditioner uses a drain pump to drain water. Use the following procedure to test the drain pump operation.

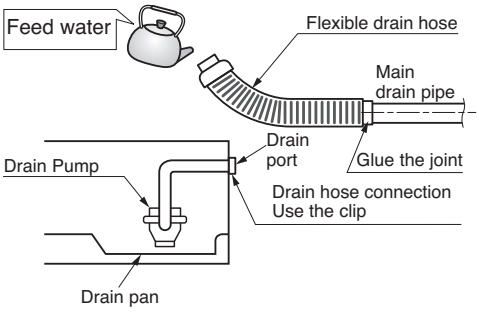

- Connect the main drain pipe to the exterior and leave it provisionally until the test comes to an end.
- Feed water to the flexible drain hose and check the piping for leakage.
- Be sure to check the drain pump for normal operating and noise when electrical wiring is complete.
- When the test is complete, connect the flexible drain hose to the drain port on the indoor unit.

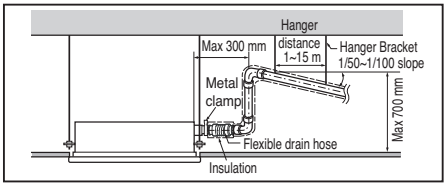

⚠ CAUTION

After the confirmation of the above conditions, prepare the wiring as follows:

1) Never fail to have an individual power specialized for the air conditioner. As for the method of wiring, be guided by the circuit diagram posted on the inside of control box cover.

2) Provide a circuit breaker switch between power source and the unit.

3) The screws which fasten the wiring in the casing of electrical fittings are liable to come loose from vibrations to which the unit is subjected during the course of transportation. Check them and make sure that they are all tightly fastened. (If they are loose, it could give rise to burn-out of the wires.)

4) Specification of power source

5) Confirm that electrical capacity is sufficient.

6) Be sure that the starting voltage is maintained at more than 90 percent of the rated voltage marked on the name plate.

7) Confirm that the cable thickness is as specified in the power sources specification. (Particularly note the relation between cable length and thickness.)

8) Never fail to equip a leakage breaker where it is wet or moist.

9) The following troubles would be caused by voltage drop-down.

- Vibration of a magnetic switch, damage on the contact point, fuse breaking, disturbance by the normal function of an overload protection device.
- Proper starting power is not given to the compressor.

HAND OVER

Teach the customer the operation and maintenance procedures, using the operation manual. (air filter cleaning, temperature control, etc.)

DIP Switch Setting

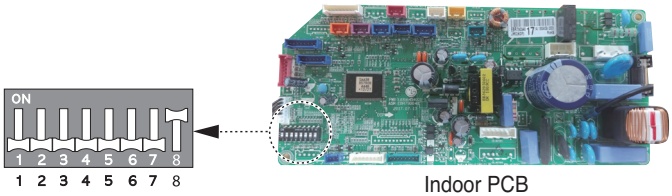

Indoor PCB

Indoor Unit

	Function	Description	Setting Off	Setting On	Default
SW1	Communication	N/A (Default)	-	-	Off
SW2	Cycle	N/A (Default)	-	-	Off
SW3	Group Control	Selection of Master or Slave	Master	Slave	Off
SW4	Dry Contact Mode	Selection of Dry Contact Mode	Wired/Wireless remote controller selection of Manual or Auto operation Mode	Auto	Off
SW5	Installation	Fan continuous operation	Continuous operation Removal	-	Off
SW6	Heater linkage	N/A	-	-	Off
SW7	Ventilator linkage	Selection of Ventilator linkage	Linkage Removal	Working	Off
	Vane selection (Console)	Selection of up/down side Vane	Up side + Down side Vane	Up side Vane Only	
	Region selection	Selection tropical region	General model	Tropical model	
SW8	Refrigerant Leak Detector	Selection of Installed or Not Installed	Not Installed	Installed	On

⚠ CAUTION

For Multi V Models, DIP switch 1, 2, 6 must be set OFF.

Group Control Setting

1. Group Control 1

■ **Wired remote controller 1 + Standard Indoor Units**

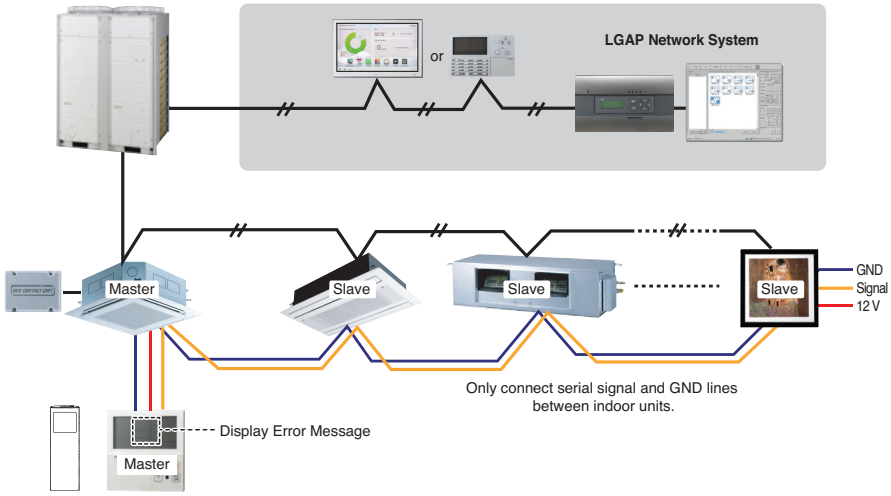

■ **DIP Switch in PCB**

① Master Setting
- No. 3 Off

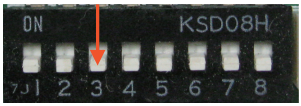

② Slave Setting
- No. 3 On

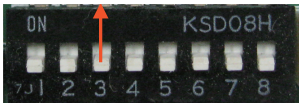

Indoor Unit DIP Switch

Some products have no DIP switch on PCB. It is possible to set indoor units to Master or Slave by using the wireless remote controller instead of DIP switch.
For the details of the setting, please refer to the manual of the wireless remote controller.

1. **It is possible to 16 indoor units(Max.) by one wired remote controller.**
   Set only one indoor unit to Master, set the others to Slave.
2. **It is possible to connect with every type of indoor units.**
3. **It is possible to use wireless remote controller at the same time.**
4. **It is possible to connect with Dry Contact and Central controller at the same time.**
   - The Master indoor unit is possible to recognize Dry Contact and Central Controller only.
5. **In case that any error occurs at indoor unit, the error code is displayed on the wired remote controller.**
   It is possible to control the other indoor units except the error units.

❉ It is possible to connect indoor units since Feb. 2009.
❉ It can be the cause of malfuctions when there is no setting of master and slave.

❉ In case of Group Control, it is possible to use following functions.
- Selection of operation, stop or mode
- Temperature setting and room temperature check
- Current time change
- Control of flow rate (High/Middle/Low)
- Reservation settings

It is not possible to use some functions.

2. Group Control 2

■ Wired remote controllers + Standard Indoor Units

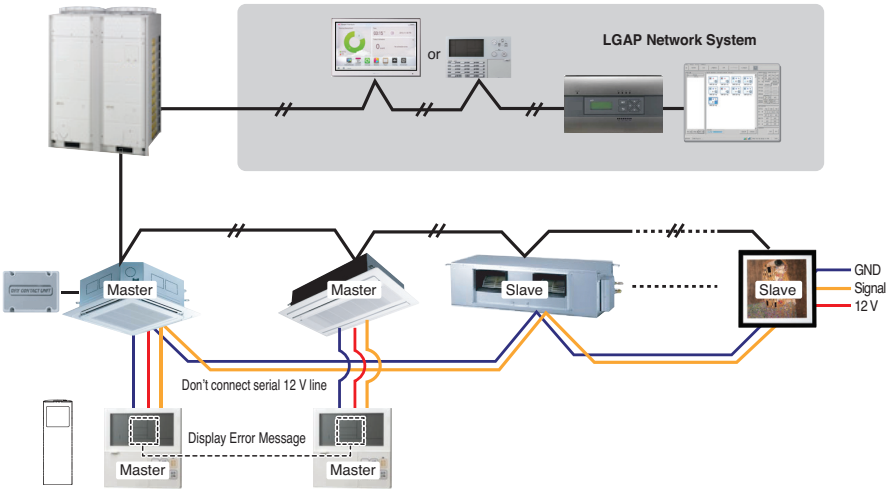

❉ It is possible to control 16 indoor units(Max.) with the master wired remote control.
❉ Other than those, it is same with the Group Control 1.

3. Group Control 3

■ Mixture connection with indoor units and Fresh Air Intake Unit

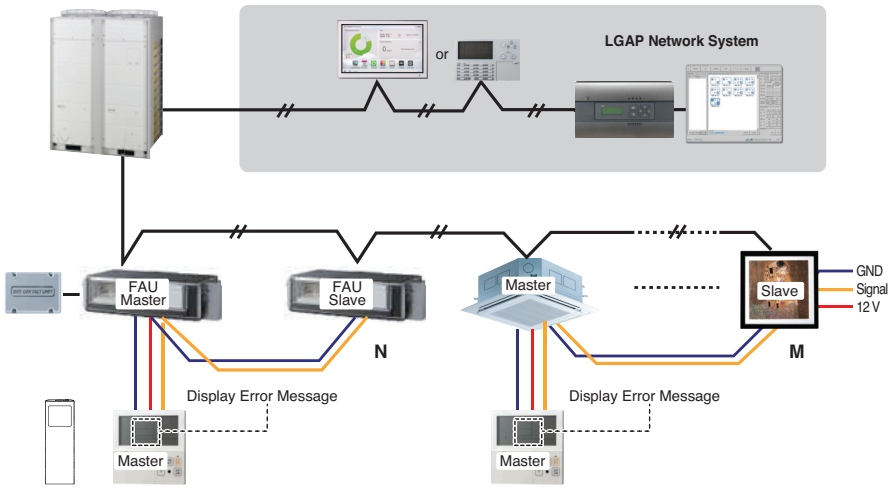

❉ In case of connecting with standard indoor unit and Fresh Air Intake Unit, separate Fresh Air Intake Unit with standard units. (N, M ≤ 16) (Because setting temperature are different.)

❉ Other than those, it is same with Group Control 1.



* FAU : Fresh Air Intake Unit
Standard: Standard Indoor Unit

4. 2 Remote Control

■ Wired remote controller 2 + Indoor unit 1

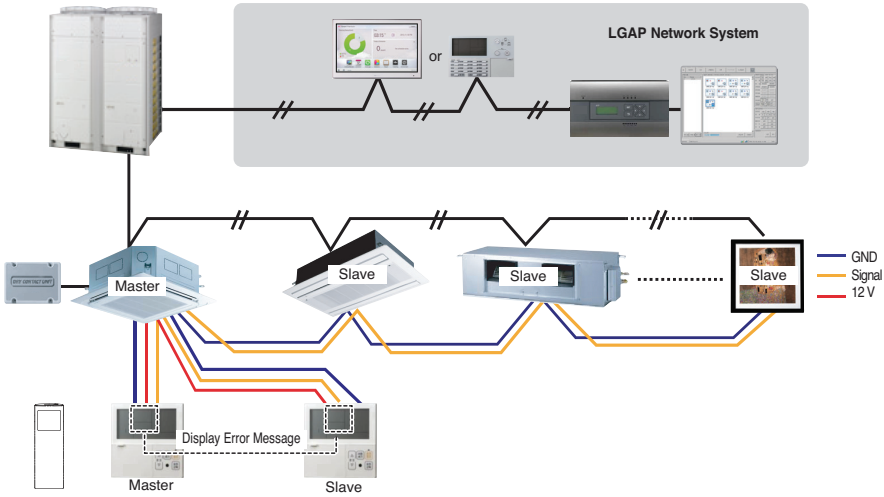

1. **It is possible to connect two wired remote controllers (Max.) with one indoor unit.**
   Set only one indoor unit to Master, set the others to Slave.
   Set only one wired remote controller to Master, set the others to Slave.
2. **Every types of indoor unit is possible to connect two remote controller.**
3. **It is possible to use wireless remote controller at the same time.**
4. **It is possible to connect with Dry Contact and Central controller at the same time.**
5. **In case that any error occurs at indoor unit, the error code is displayed on the wired remote controller.**
6. **There isn't limits of indoor unit function.**

5. Accessories for group control setting

It is possible to set group control by using below accessories.

Indoor unit 2 EA +Wired remote controller 1 EA	Indoor unit 1 EA +Wired remote controller 2 EA
❊ PZCWRCG3 cable used for connection	❊ PZCWRC2 cable used for connection

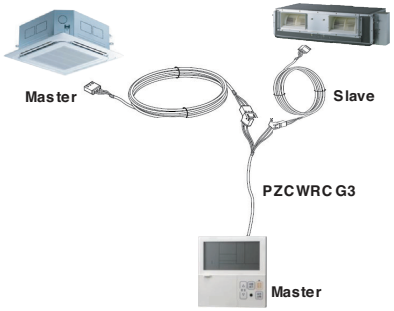

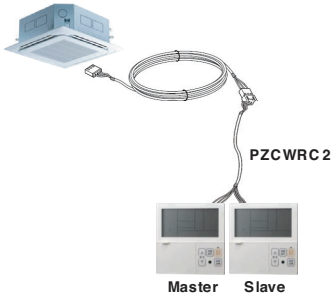

⚠ CAUTION

- **Apply totally enclosed noncombustible conduit in case of local building code Requiring plenum cable usage.**

Model Designation

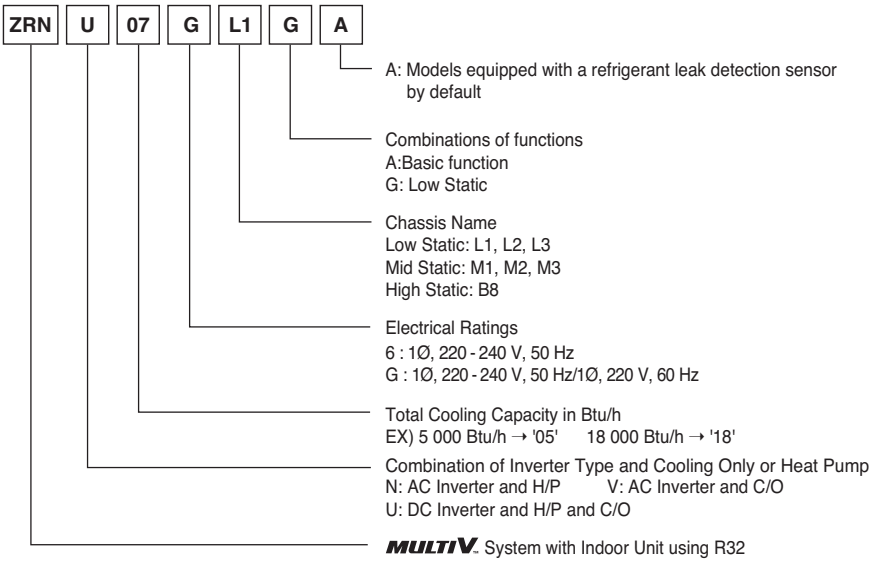

Airborne Noise Emission

The A-weighted sound pressure emitted by this product is below 70 dB.
** The noise level can vary depending on the site.

The figures quoted are emission level and are not necessarily safe working levels. Whilst there is a correlation between the emission and exposure levels, this cannot be used reliably to determine whether or not further precautions are required. Factor that influence the actual level of exposure of the workforce include the characteristics of the work room and the other sources of noise, i.e. the number of equipment and other adjacent processes and the length of time for which an operator exposed to the noise. Also, the permissible exposure level can vary from country to country. This information, however, will enable the user of the equipment to make a better evaluation of the hazard and risk.

How to Set E.S.P?

L1 Chassis : 05, 07, 09 k

(Unit : CMM)

Setting Value	Static Pressure(mmAq(Pa))					
	0 (0)	1 (10)	2 (20)	3 (29)	4 (39)	5 (49)
60	-	-	-	-	-	-
65	5.03	-	-	-	-	-
70	5.60	4.85	-	-	-	-
75	6.19	5.44	4.57	-	-	-
80	6.79	6.05	5.17	-	-	-
85	7.41	6.67	5.80	4.80	-	-
90	8.05	7.31	6.43	5.44	-	-
95	8.71	7.96	7.09	6.09	4.97	-
100	9.38	8.63	7.76	6.76	5.64	-
105	10.07	9.32	8.45	7.45	6.33	5.08
110	-	10.03	9.16	8.16	7.04	5.79
115	-	-	9.88	8.88	7.76	6.51
120	-	-	-	9.62	8.50	7.25
125	-	-	-	10.38	9.26	8.01
130	-	-	-	-	10.03	8.78

L2 Chassis : 12, 15, 18 k

(Unit : CMM)

Setting Value	Static Pressure(mmAq(Pa))					
	0 (0)	1 (10)	2 (20)	3 (29)	4 (39)	5 (49)
75	6.50	-	-	-	-	-
80	7.34	6.70	-	-	-	-
85	8.20	7.55	6.69	-	-	-
90	9.07	8.43	7.56	6.47	-	-
95	9.96	9.32	8.45	7.36	-	-
100	10.87	10.22	9.36	8.27	6.96	-
105	11.79	11.15	10.28	9.19	7.89	6.35
110	12.73	12.09	11.22	10.14	8.83	7.30
115	13.69	13.05	12.18	11.09	9.78	8.25
120	14.67	14.02	13.16	12.07	10.76	9.23
125	15.66	15.01	14.15	13.06	11.75	10.22
130	16.67	16.02	15.16	14.07	12.76	11.23
135	-	-	16.18	15.10	13.79	12.26
140	-	-	-	16.14	14.83	13.30
145	-	-	-	-	15.89	14.36

L3 Chassis : 21, 24 k

(Unit : CMM)

Setting Value	Static Pressure(mmAq(Pa))					
	0 (0)	1 (10)	2 (20)	3 (29)	4 (39)	5 (49)
85	10.19	-	-	-	-	-
90	12.18	10.71	11.09	-	-	-
95	13.81	12.34	12.19	-	-	-
100	15.16	13.69	13.38	10.71	-	-
105	16.30	14.83	14.36	11.85	-	-
110	17.31	15.85	15.23	12.86	10.97	-
115	18.27	16.80	16.07	13.82	11.93	-
120	19.26	17.79	16.93	14.80	12.91	10.49
125	20.34	18.87	17.89	15.88	13.99	11.57
130	21.60	20.13	19.01	17.14	15.25	12.83
135	-	21.64	20.36	18.66	16.76	14.35
140	-	-	22.01	20.50	18.61	16.19
145	-	-	-	22.75	20.86	18.44

NOTE

1. The above table shows the correlation between the air rates and E.S.P.
2. Please refer wired remote controller manual for E.S.P setting procedure.

M1 Chassis : 7, 9, 12, 15, 18 k

(Unit: CMM)

Setting value	Static Pressure (mmAq(Pa))							
	2.5(25)	4(39)	6(59)	8(78)	10(98)	12(118)	14(137)	15(147)
70	11.3	-	-	-	-	-	-	-
75	12.8	-	-	-	-	-	-	-
80	14.4	11.4	-	-	-	-	-	-
85	15.9	13.2	10.2	-	-	-	-	-
90	17.5	15.0	12.0	-	-	-	-	-
95	19.0	16.7	13.7	10.7	-	-	-	-
100	20.6	18.5	15.5	12.5	-	-	-	-
105	22.1	20.3	17.3	14.3	11.1	-	-	-
110	23.7	22.1	19.0	16.1	13.1	10.0	-	-
115	-	23.8	20.8	17.9	15.1	12.2	-	-
120	-	-	22.6	19.7	17.1	14.3	11.3	-
125	-	-	-	21.5	19.1	16.5	13.6	11.9
130	-	-	-	23.3	21.2	18.7	15.8	14.3
135	-	-	-	-	23.2	20.8	18.0	16.7
140	-	-	-	-	-	23.0	20.3	19.1
145	-	-	-	-	-	-	22.5	21.5
150	-	-	-	-	-	-	-	23.8

M1 Chassis : 24 k

(Unit: CMM)

Setting value	Static Pressure (mmAq(Pa))							
	2.5(25)	4(39)	6(59)	8(78)	10(98)	12(118)	14(137)	15(147)
85	16.8	14.6	-	-	-	-	-	-
90	18.1	15.9	-	-	-	-	-	-
95	19.4	17.2	15.0	-	-	-	-	-
100	20.7	18.5	16.3	13.9	-	-	-	-
105	22.0	19.8	17.7	15.3	13.0	-	-	-
110	23.3	21.1	19.1	16.8	14.6	-	-	-
115	24.6	22.4	20.5	18.3	16.3	14.2	-	-
120	25.9	23.7	21.8	19.7	17.9	15.9	13.3	-
125	-	25.1	23.2	21.2	19.6	17.5	15.2	14.6
130	-	-	24.6	22.7	21.2	19.2	17.1	16.3
135	-	-	-	24.2	22.9	20.9	19.0	18.1
140	-	-	-	-	24.5	22.6	20.9	19.9

NOTE

1. The above table shows the correlation between the air rates and E.S.P.
2. Make sure to check and adjust E.S.P (external static pressure) value after the installation of the product. Otherwise, there is a risk of weak cooling/heating and condensed water discharge/drop.

M2 Chassis : 7, 9, 12, 15 k

(Unit: CMM)

Setting value	Static Pressure (mmAq(Pa))							
	4(39)	6(59)	8(78)	10(98)	12(118)	14(137)	16(157)	18(177)
65	4.7	-	-	-	-	-	-	-
70	10.3	-	-	-	-	-	-	-
75	15.0	-	-	-	-	-	-	-
80	19.0	7.6	-	-	-	-	-	-
85	24.9	13.8	4.9	-	-	-	-	-
90	27.6	20.4	7.8	-	-	-	-	-
95	30.4	24.4	15.7	5.2	-	-	-	-
100	33.1	28.7	20.8	9.2	3.8	-	-	-
105	35.9	31.7	24.1	17.5	6.7	-	-	-
110	38.6	34.7	30.5	22.2	11.5	5.5	-	-
115	40.1	37.8	33.8	27.9	20.2	9.1	-	-
120	-	39.1	37.1	31.4	24.6	17.9	7.5	-
125	-	-	38.5	35.0	30.1	21.2	11.0	6.7
130	-	-	-	37.1	32.0	27.6	15.6	10.0
135	-	-	-	-	36.8	31.5	24.3	16.2
140	-	-	-	-	40.5	35.9	29.8	22.4
145	-	-	-	-	-	39.9	34.9	27.8
150	-	-	-	-	-	-	39.4	34.2
155	-	-	-	-	-	-	-	37.1

M2 Chassis : 28, 36 k

(Unit: CMM)

Setting value	Static Pressure (mmAq(Pa))							
	4(39)	6(59)	8(78)	10(98)	12(118)	14(137)	16(157)	18(177)
65	4.7	-	-	-	-	-	-	-
70	10.3	-	-	-	-	-	-	-
75	15.0	-	-	-	-	-	-	-
80	19.0	7.6	-	-	-	-	-	-
85	24.9	13.8	4.9	-	-	-	-	-
90	27.6	20.4	7.8	-	-	-	-	-
95	30.4	24.4	15.7	5.2	-	-	-	-
100	33.1	28.7	20.8	9.2	3.8	-	-	-
105	35.9	31.7	24.1	17.5	6.7	-	-	-
110	38.6	34.7	30.5	22.2	11.5	5.5	-	-
115	40.1	37.8	33.8	27.9	20.2	9.1	-	-
120	-	39.1	37.1	31.4	24.6	17.9	7.5	-
125	-	-	38.5	35.0	30.1	21.2	11.0	6.7
130	-	-	-	37.1	32.0	27.6	15.6	10.0
135	-	-	-	-	36.8	31.5	24.3	16.2
140	-	-	-	-	40.5	35.9	29.8	22.4
145	-	-	-	-	-	39.9	34.9	27.8
150	-	-	-	-	-	-	39.4	34.2
155	-	-	-	-	-	-	-	37.1

NOTE

1. The above table shows the correlation between the air rates and E.S.P.
2. Make sure to check and adjust E.S.P (external static pressure) value after the installation of the product. Otherwise, there is a risk of weak cooling/heating and condensed water discharge/drop.

M2 Chassis : 42 k

(Unit: CMM)

Setting value	Static Pressure (mmAq(Pa))							
	4(39)	6(59)	8(78)	10(98)	12(118)	14(137)	16(157)	18(177)
90	23.0	-	-	-	-	-	-	-
95	25.9	19.1	-	-	-	-	-	-
100	28.6	23.3	-	-	-	-	-	-
105	31.4	26.4	19.6	-	-	-	-	-
110	34.2	29.9	24.2	-	-	-	-	-
115	36.6	32.7	28.8	21.7	-	-	-	-
120	39.2	35.7	31.8	26.2	19.6	-	-	-
125	41.7	38.5	34.8	30.8	24.3	-	-	-
130	44.0	41.2	37.7	34.1	29.0	22.3	-	-
135	-	43.8	40.7	37.4	32.6	27.5	20.5	-
140	-	-	43.5	40.4	37.2	32.6	25.8	19.9
145	-	-	-	43.4	41.6	37.4	30.7	24.6
150	-	-	-	-	43.4	42.3	35.4	29.4
155	-	-	-	-	-	43.7	37.5	32.7

M3 Chassis : 18, 24, 28 k

(Unit: CMM)

Setting value	Static Pressure (mmAq(Pa))								
	4(39)	6(59)	8(78)	10(98)	12(118)	14(137)	16(157)	18(177)	20(196)
70	25.2	-	-	-	-	-	-	-	-
75	30.4	21.4	-	-	-	-	-	-	-
80	35.0	27.2	18.5	-	-	-	-	-	-
85	39.8	35.4	24.6	-	-	-	-	-	-
90	44.3	40.1	31.5	22.7	-	-	-	-	-
95	49.3	44.8	36.8	28.8	21.4	-	-	-	-
100	53.0	49.4	44.6	35.4	27.7	-	-	-	-
105	57.2	54.1	49.2	43.0	35.0	26.5	-	-	-
110	-	58.8	53.9	47.9	42.4	33.8	24.3	14.8	-
115	-	-	58.6	52.9	47.8	42.5	31.4	20.3	18.3
120	-	-	-	57.8	53.1	48.2	39.2	30.2	24.6
125	-	-	-	-	-	49.4	43.1	36.7	33.1
130	-	-	-	-	-	52.7	48.6	44.4	39.6
135	-	-	-	-	-	-	-	50.2	45.2

M3 Chassis : 48, 54 k

(Unit: CMM)

Setting value	Static Pressure (mmAq(Pa))						
	5(49)	6(59)	8(78)	10(98)	12(118)	14(137)	15(147)
70	25.1	-	-	-	-	-	-
75	29.5	26.1	-	-	-	-	-
80	34.0	30.8	25.9	-	-	-	-
85	38.4	35.4	30.6	23.2	-	-	-
90	42.9	40.1	35.2	28.1	21.0	-	-
95	47.3	44.8	39.9	33.1	26.3	19.5	-
100	51.8	49.4	44.6	38.0	31.7	25.2	22.6
105	56.2	54.1	49.2	43.0	37.1	31.0	28.5
110	-	58.8	53.9	47.9	42.4	36.7	34.4
115	-	-	58.6	52.9	47.8	42.5	40.3
120	-	-	-	57.8	53.1	48.2	46.1
125	-	-	-	-	54.2	49.4	47.3

NOTE

1. The above table shows the correlation between the air rates and E.S.P.
2. Make sure to check and adjust E.S.P (external static pressure) value after the installation of the product. Otherwise, there is a risk of weak cooling/heating and condensed water discharge/drop.

B8 Chassis : 36, 42, 48, 76, 96 k

(Unit: CMM)

Setting Value	Static Pressure(mmAq(Pa))											
	3(29)	4(39)	5(49)	6(59)	9(88)	12(118)	15(147)	18(177)	20(196)	22(216)	23(226)	25(245)
50	40.3	36.2	-	-	-	-	-	-	-	-	-	-
55	48.8	44.2	36.4	-	-	-	-	-	-	-	-	-
60	54.9	50.2	49.7	45.0	-	-	-	-	-	-	-	-
65	62.6	60.4	55.1	52.9	-	-	-	-	-	-	-	-
70	67.9	64.5	62.1	60.7	47.1	-	-	-	-	-	-	-
75	75.5	72.2	69.0	68.5	56.9	44.7	-	-	-	-	-	-
80	82.6	80.9	76.6	75.4	69.7	55.2	-	-	-	-	-	-
85	88.8	85.9	82.0	81.6	78.6	67.4	55.9	-	-	-	-	-
91	94.7	93.0	90.4	90.2	87.1	78.9	67.6	54.2	-	-	-	-
95	-	-	-	-	-	86.1	77.0	66.4	50.6	30.0	-	-
100	-	-	-	-	-	88.3	84.9	75.9	69.5	60.8	43.1	-
105	-	-	-	-	-	88.3	84.9	81.1	77.4	72.0	67.9	51.3

NOTE

1. The above table shows the correlation between the air rates and E.S.P.
2. Make sure to check and adjust E.S.P (external static pressure) value after the installation of the product. Otherwise, there is a risk of weak cooling/heating and condensed water discharge/drop.

How to Set Auto ESP (Air conditioner)

- This function automatically sets the rotation speed of the fans corresponding to each step of rated airflow for easy installation.
- Auto ESP setting is required by remote control

※ For details, refer to the remote control manual

1. Enter the installer mode on the remote control and select Auto ESP.
2. Select the setting category, and press [∧(up)] button for 3 seconds to enter the password input screen for the installer setting.
3. Input the password and press [OK] button to move to the installer setting list. And Selet Auto ESP.
4. After selecting “Manual”, set the Voltage (190V - 270V) as shown in the screen.
5. It takes about 3-8 minutes to set, and you can see the setting result as Pass or Fail.

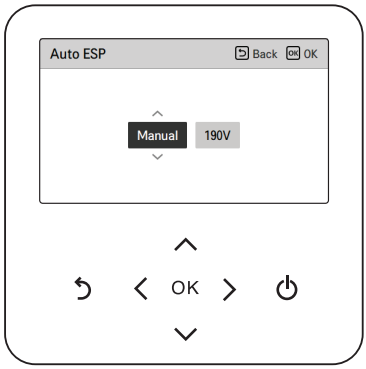

NOTE

If Auto ESP is incorrectly set, the air conditioner may malfunction.

This function must be set by an installation specialist with an installation license.

This function is an additional function of the product and may not work in some models.

Wired remote control does not work while 'Auto ESP' is set.

R32 Leak detection system

R32 Leak Detection System is composed with R32 Sub PCB and R32 Sensor. R32 Sensor detects concentration of refrigerant(R32) in the air. When the concentration of the refrigerant in the air is over 5000 ppm or components have a problem, leak detection system will be activated. (CH228, 229, 230).

When leak detection system is activated, all the following actions will be operated automatically.

- All indoor and outdoor units connected with indoor unit error occurred will stop and display error code.
- All indoor and outdoor units cannot be controlled until error code disappears.
- Fan of indoor unit error occurred will operate high speed. (Some models will operate maximum speed)
- All the safety components connected with indoor unit error occurred will operate.

If leak detection system is activated, ventilate room and contact authorized personnel immediately.

Since the lifetime of the R32 sensor is 3,650 days, the sensor must be replaced before its lifetime reaches the end. The indoor unit will display error code (CH236) to indicate that the remaining lifetime is under six month. If there is an error code of 236, contact authorized personnel as soon as possible.

Trouble Shooting for R32 Leak Detection System

The following troubleshooting procedures shall be performed to restore the system to its normal operating state after activation of the leak detection system. All procedures must be carried out exclusively by authorized personnel.

Error No.	Error Type	Error Point
CH 228	System malfunction Error	• R32 Sub PCB malfunction • R32 Sensor malfunction

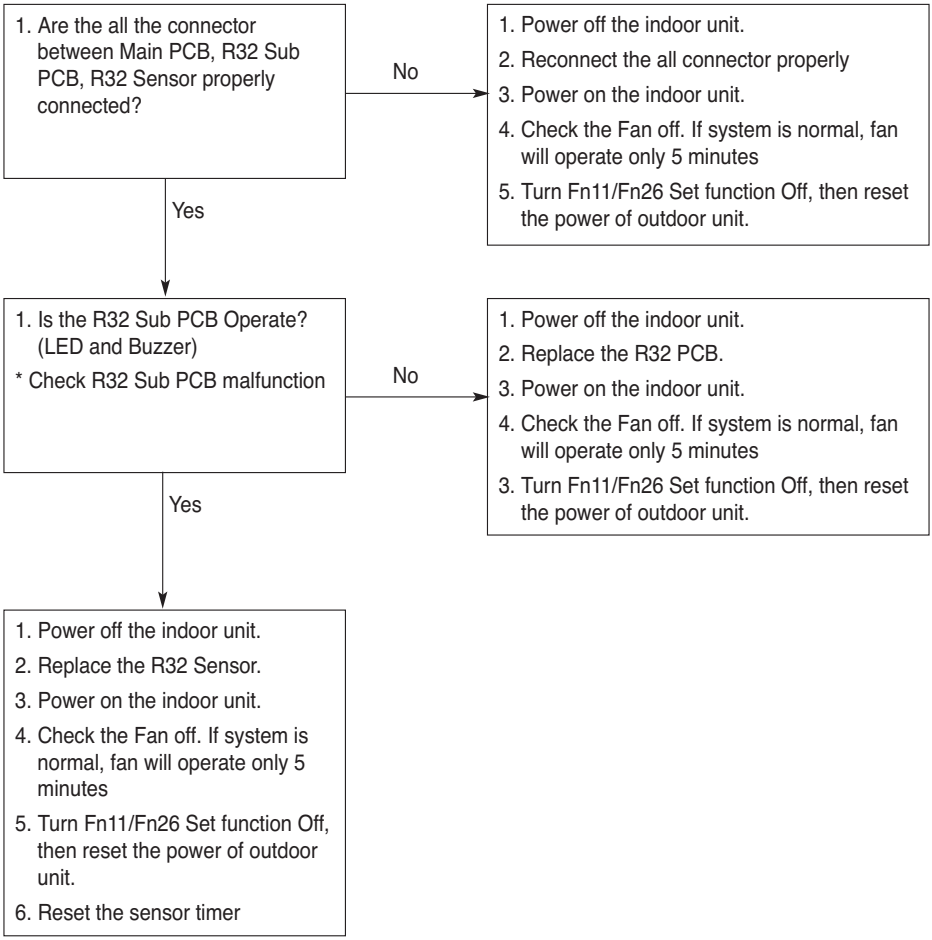

Error No.	Error Type	Error Point
CH 229	R32 Sensor Lifetime error	• The R32 sensor has reached the end of its lifetime.

1. Reset the power of indoor unit
2. Is the fan off? (Is the R32 PCB normal?)
   If system is normal, fan will operate only 5 minutes

Yes → The system is normal.
Turn Fn11/Fn26 Set function Off, then reset the power of outdoor unit.

No →

1. Power off the indoor unit.
2. Replace the R32 Sensor.
3. Power on the indoor unit.
4. Reset the sensor timer
5. Check the Fan off. If system is normal, fan will operate only 5 minutes
6. Turn Fn11/Fn26 Set function Off, then reset the power of outdoor unit.

Error No.	Error Type	Error Point
CH 230	Refrigerant Leak Detection Error	• Misdetection by other gases • There is leak point in the system.

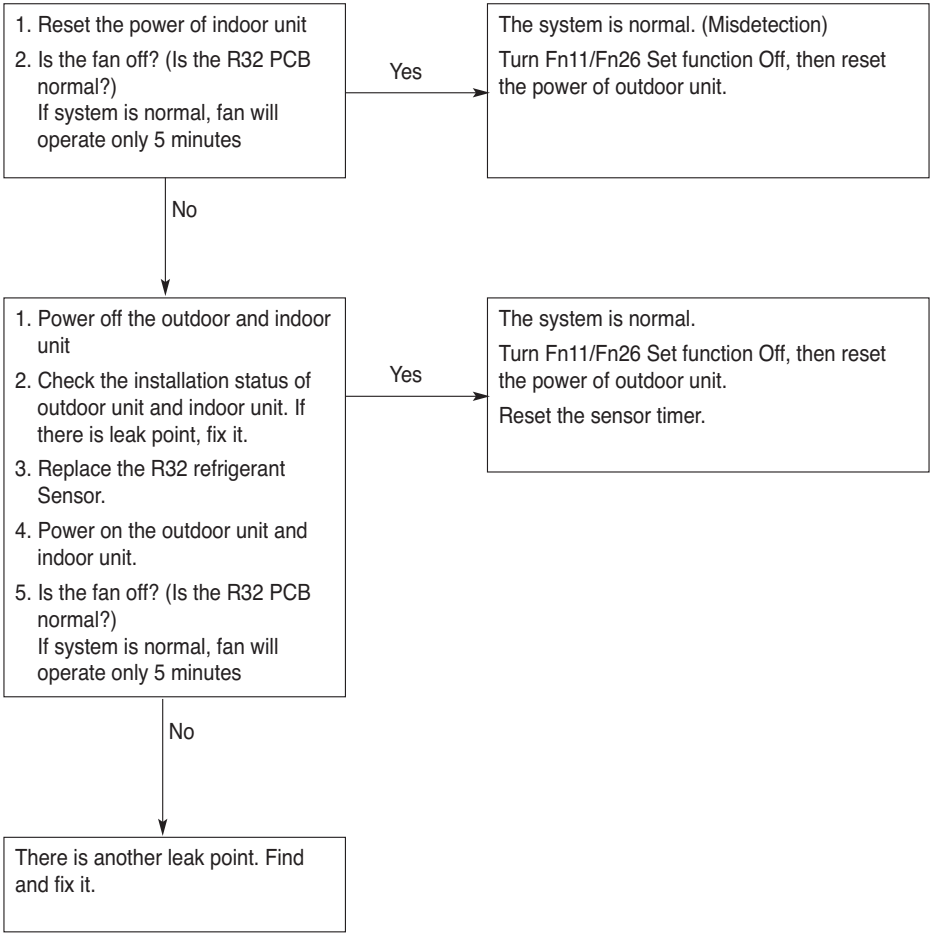

Error No.	Error Type	Error Point
CH 236	R32 Sensor Lifetime Pre Alarm	• The remaining lifetime of R32 Sensor is under six month.

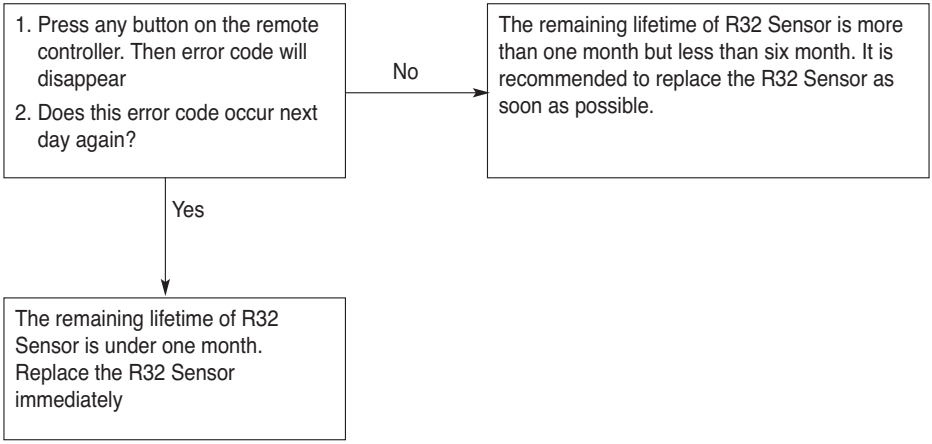

Fn11 Setting Process (Multi V S)

After clear issue, Fn11 Set function should be deactivated from On to Off.

Outdoor unit main
PCB DIP switch on : No.5

"Func" is displayed on
7-Segment of the PCB

7-SEG
Func

Push the button SW1T (● : confirm)
of the outdoor unit main PCB

Select the “Fn11” mode using '▶', '◀'
Button. Push the '●' button

7-SEG
Fn11

Select the “SET” mode using '▶', '◀'
Button. Push the '●' button

7-SEG
SEt

Select the “OFF” mode using '▶', '◀'
Button. Push the '●' button

7-SEG
on → oFF

Outdoor unit main PCB
DIP switch off : No.5

Reset the power of Outdoor unit or
Push the Reset button (SW1M)

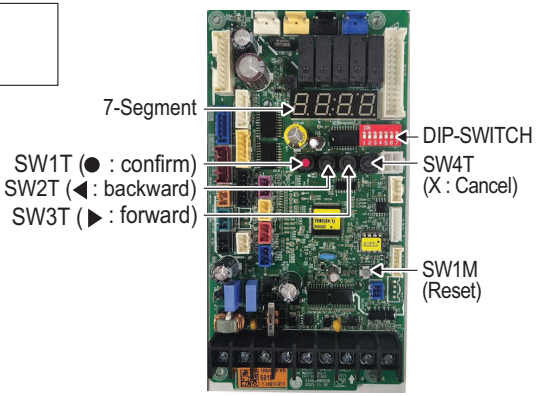

Fn26 Setting Process (Multi V i)

After clear issue, Fn26 Set function should be deactivated from On to Off.

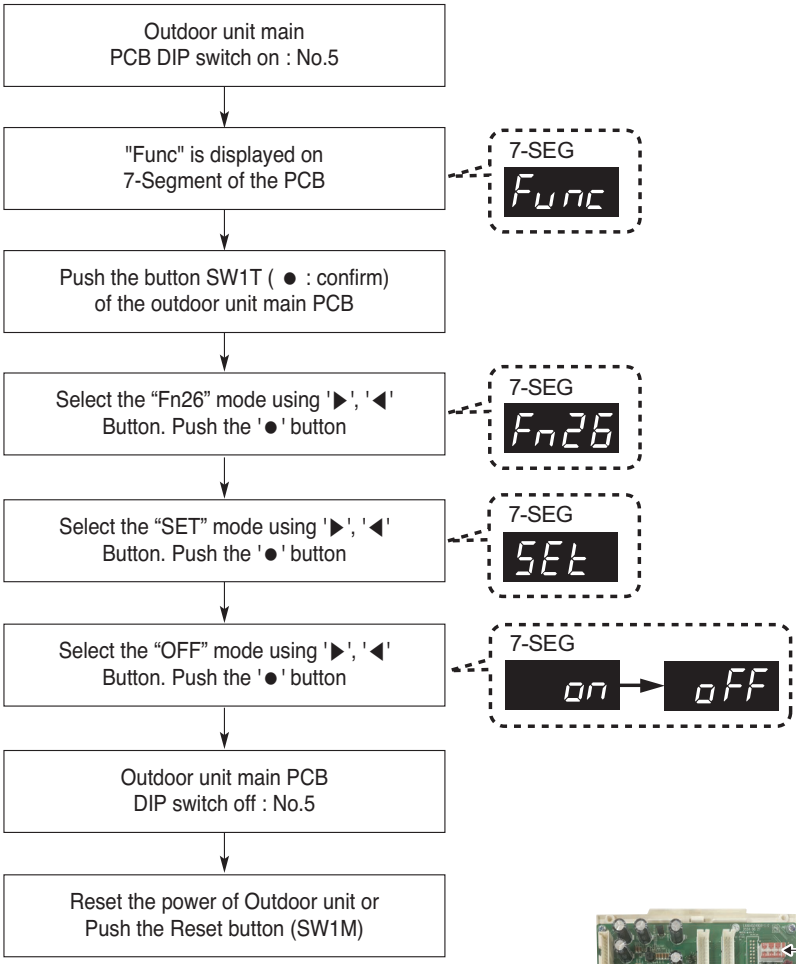

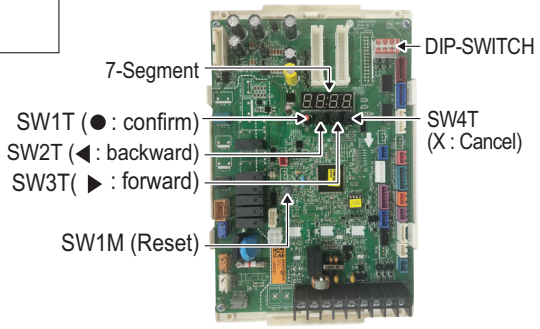

Reset the Refrigerant Leak Sensor Timer

After Replace the R32 Sensor, the sensor timer should be reset.

Wireless remote controller

1. With the (AI AEC) or (JET MODE) or (JET COOL) button pressed, press the reset button.

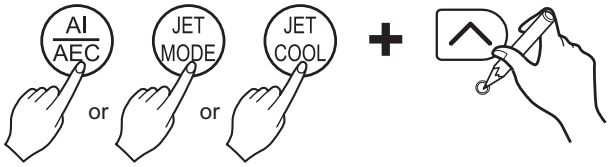

2. By using the (^) or (v) button, set the installer code “6b”

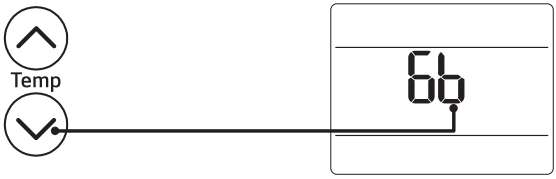

3. Press the (⏻) button toward the indoor unit 1 time.

4. Reset the remote controller to use the general operation mode.

Standard 3 Wired remote controller

This feature resets the life timer of the refrigerant leakage detection sensor.

• In the installer setting list, select Refrigerant Leak Sensor Timer category, and press [OK] button to move to the detail screen.

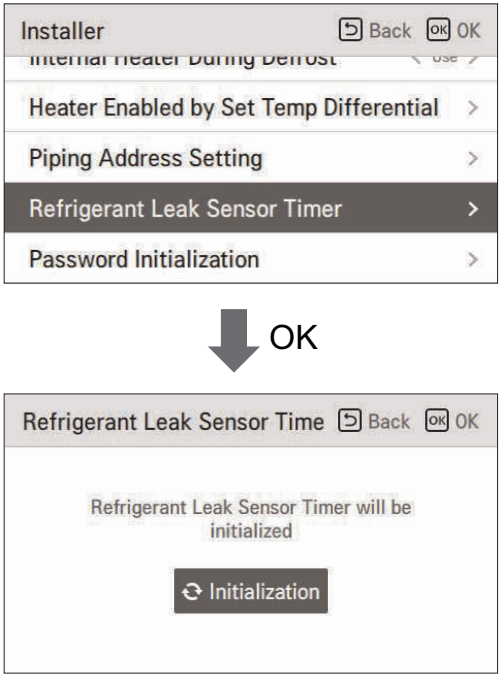

- Please make sure to reset the refrigerant leakage detection sensor, if you replaced it. The product may malfunction, if you don't reset it.

NOTE

Depending on the version of remote control, this feature may not be activated.



Manufacturer :
LG Electronics Inc.
84, Wanam-ro, Seongsan-gu, Changwon-si, Gyeongsangnam-do, KOREA

UK Importer : LG Electronics U.K. Ltd
Velocity 2, Brooklands Drive, Weybridge, KT13 0SL

Eco design requirement

- The information for Eco design is available on the following free access website.
  https://www.lg.com/global/support/cedoc/cedoc