LG
Life's Good

MFL71949456 2307REV01

UR78*

www.lg.com

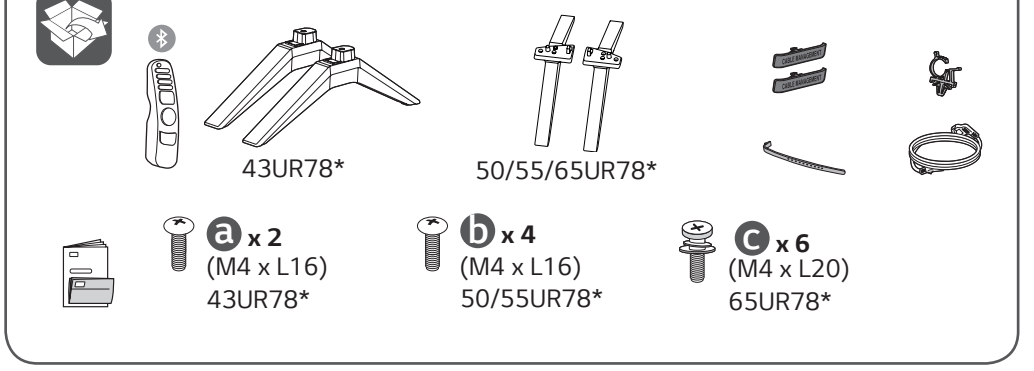

43/50/55UR78*

1

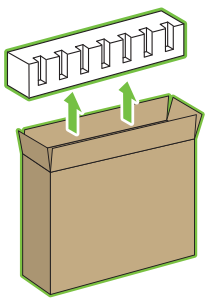

2

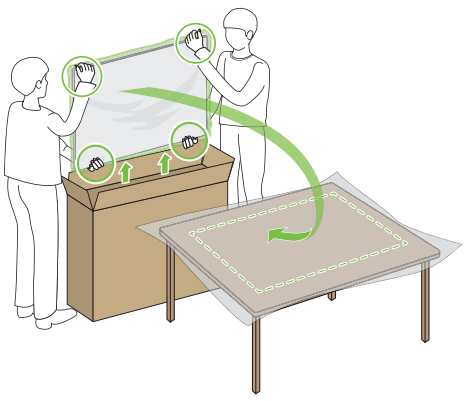

3

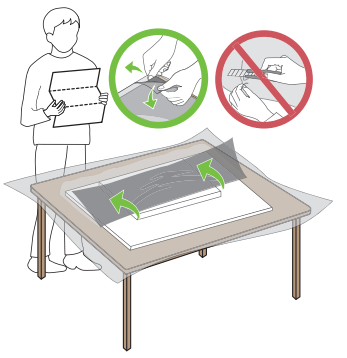

65UR78*

1

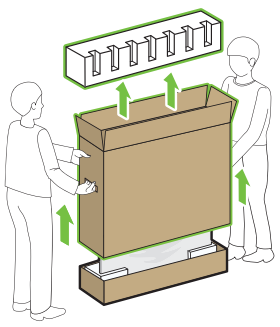

2

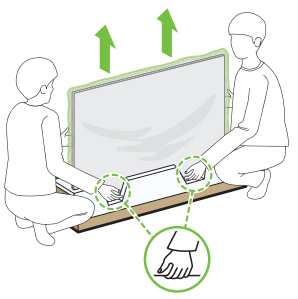

3

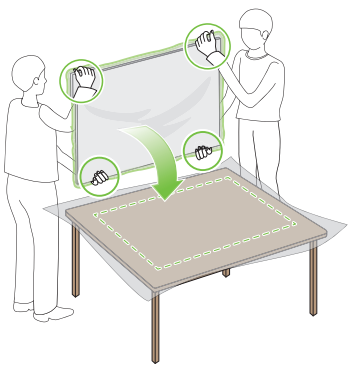

4

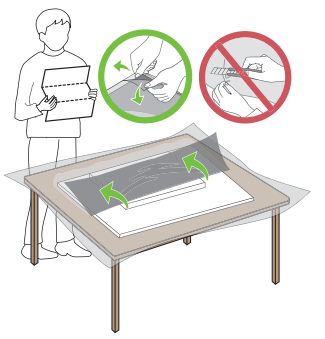

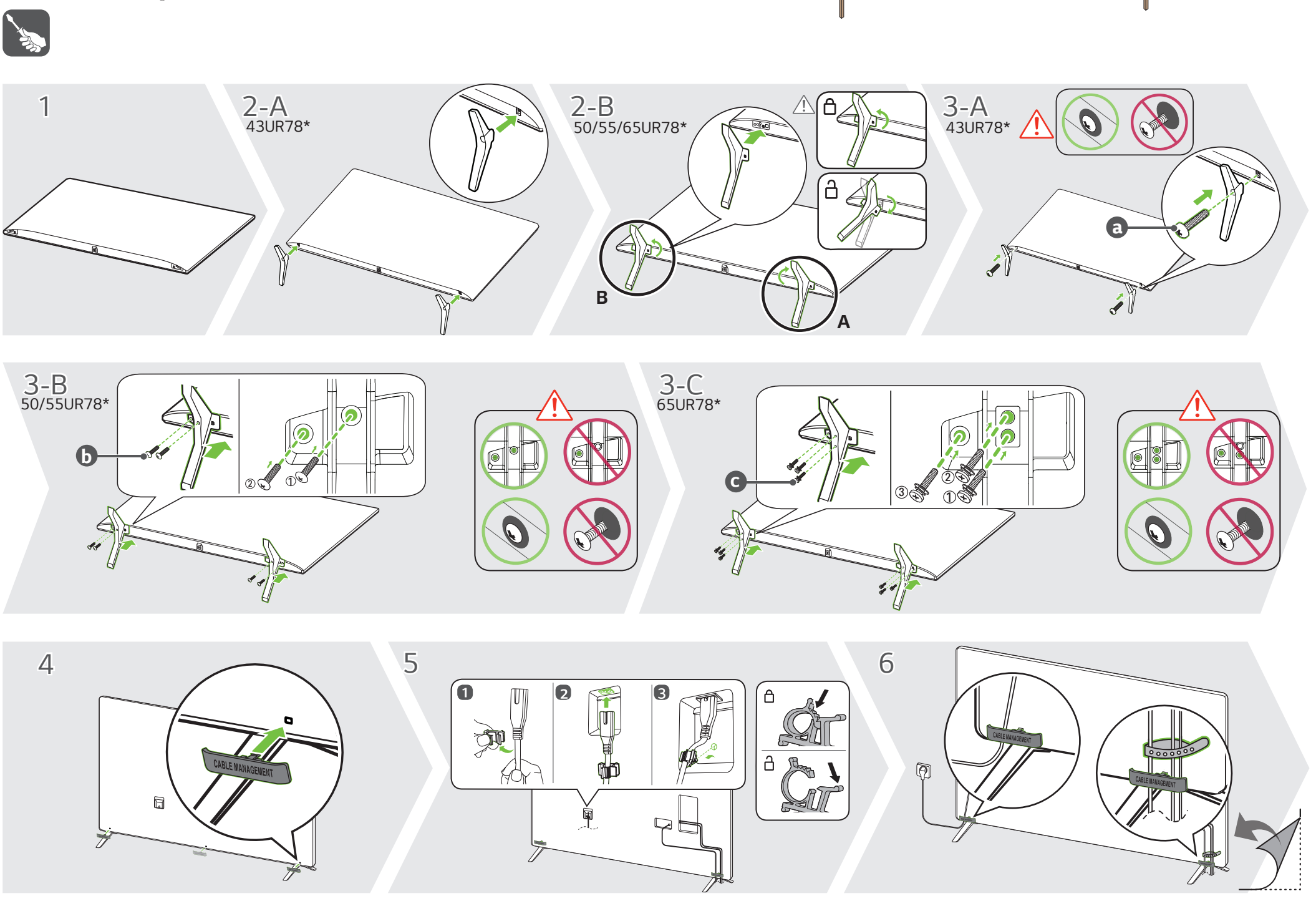

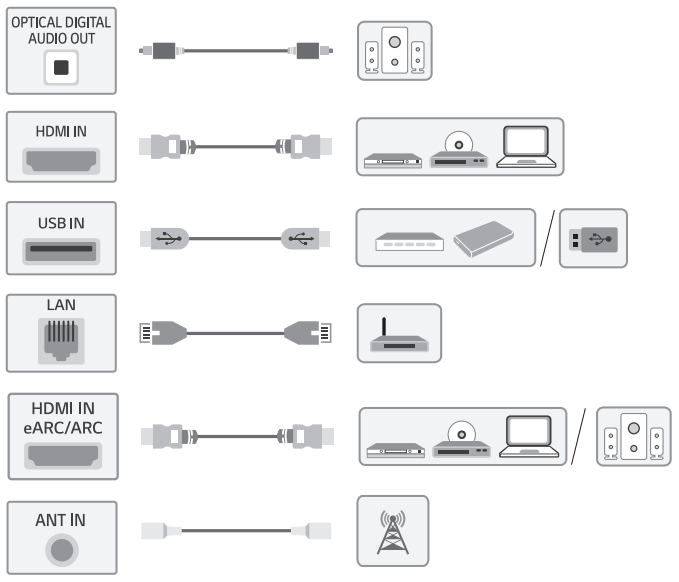

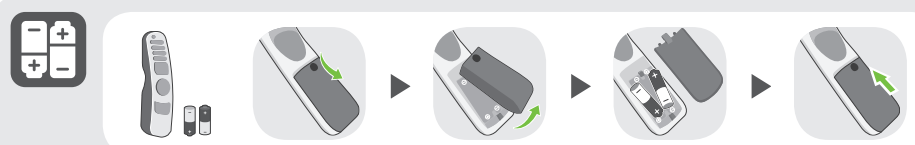

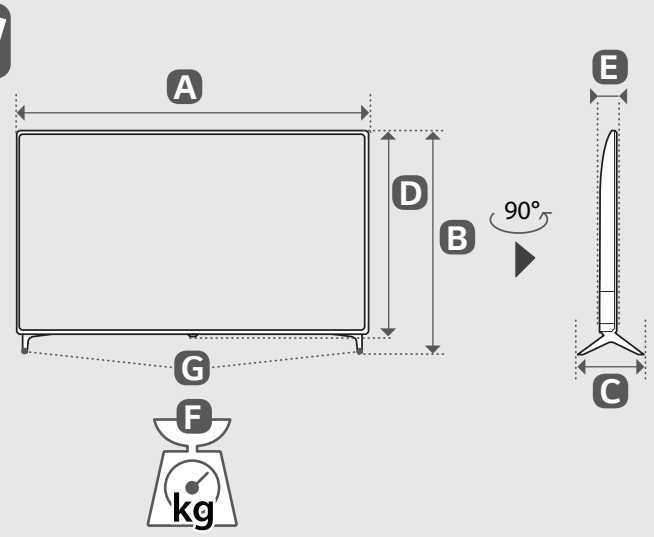

	A	B	C	D	E	F	F - G
	(mm)					(kg)	
43UR78006LL	967	621	200	564	57.1	8.9	8.8
50UR78006LL	1121	716	230	651	57.1	11.8	11.7
55UR78006LL	1235	780	230	715	57.5	14.1	14.0
65UR78006LL 65UR78066LK	1454	903	269	838	57.7	21.6	21.4

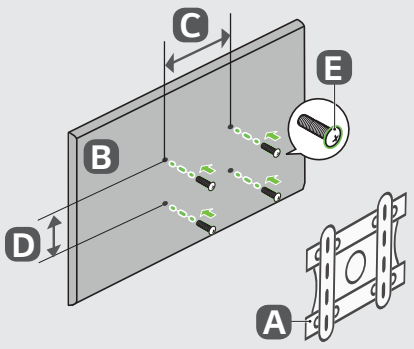

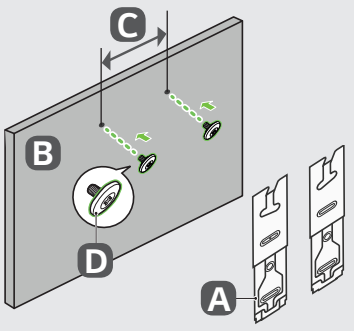

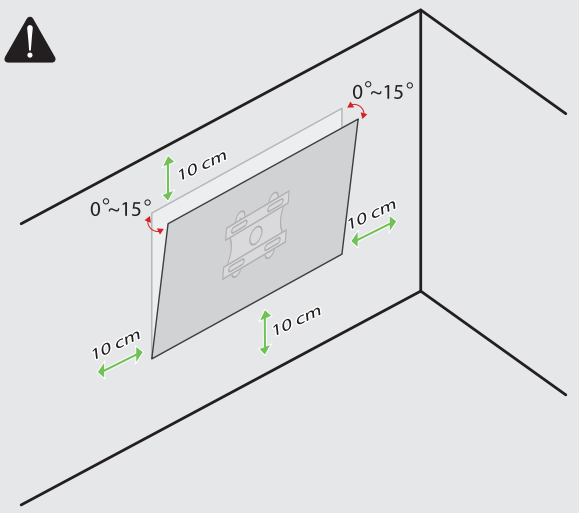

A	B	C x D (mm)	E
LSW240B MSW240	43/50UR78*	200 x 200	M6
OLW480B MSW240	55UR78*	300 x 300	M6
OLW480B	65UR78*	300 x 300	M6

A	B	C (mm)	D
WB21LMB	43/50UR78*	200	M6
	55/65UR78*	300	