LG
Life's Good

OWNER'S MANUAL

Mini Hi-Fi System

Please read this manual carefully before operating your set and retain it for future reference.

CM4540 (CM4540, CMS4540F, CMS4540W)
CM4440 (CM4440, CMS4540F)
CM4340 (CM4340, CMS4340F)

MFL69146721

ENGLISH
DEUTSCH
FRANÇAIS
NEDERLANDS
SLOVENŠČINA
ITALIANO
ESPAÑOL
ΕΛΛΗΝΙΚΑ
PORTUGUÊS

Safety Information

CAUTION: TO REDUCE THE RISK OF ELECTRIC SHOCK DO NOT REMOVE COVER (OR BACK) NO USER-SERVICEABLE PARTS INSIDE REFER SERVICING TO QUALIFIED SERVICE PERSONNEL.

This lightning flash with arrowhead symbol within an equilateral triangle is intended to alert the user to the presence of uninsulated dangerous voltage within the product's enclosure that may be of sufficient magnitude to constitute a risk of electric shock to persons.

The exclamation point within an equilateral triangle is intended to alert the user to the presence of important operating and maintenance (servicing) instructions in the literature accompanying the product.

WARNING: TO PREVENT FIRE OR ELECTRIC SHOCK HAZARD, DO NOT EXPOSE THIS PRODUCT TO RAIN OR MOISTURE.

WARNING: Do not install this equipment in a confined space such as a book case or similar unit.

CAUTION: Do not block any ventilation openings. Install in accordance with the manufacturer's instructions.
Slots and openings in the cabinet are provided for ventilation and to ensure reliable operation of the product and to protect it from over heating. The openings shall be never be blocked by placing the product on a bed, sofa, rug or other similar surface. This product shall not be placed in a built-in installation such as a bookcase or rack unless proper ventilation is provided or the manufacturer's instruction has been adhered to.

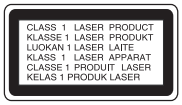

CAUTION: This product employs a Laser System.
To ensure proper use of this product, please read this owner's manual carefully and retain it for future reference. Shall the unit require maintenance, contact an authorized service center.
Use of controls, adjustments or the performance of procedures other than those specified herein may result in hazardous radiation exposure.
To prevent direct exposure to laser beam, do not try to open the enclosure.

CAUTION concerning the Power cord

Most appliances recommend they be placed upon a dedicated circuit;

That is, a single outlet circuit which powers only that appliance and has no additional outlets or branch circuits. Check the specification page of this owner's manual to be certain. Do not overload wall outlets. Overloaded wall outlets, loose or damaged wall outlets, extension cords, frayed power cords, or damaged or cracked wire insulation are dangerous. Any of these conditions could result in electric shock or fire. Periodically examine the cord of your appliance, and if its appearance indicates damage or deterioration, unplug it, discontinue use of the appliance, and have the cord replaced with an exact replacement part by an authorized service center. Protect the power cord from physical or mechanical abuse, such as being twisted, kinked, pinched, closed in a door, or walked upon. Pay particular attention to plugs, wall outlets, and the point where the cord exits the appliance. To disconnect power from the mains, pull out the mains cord plug. When installing the product, ensure that the plug is easily accessible.

This device is equipped with a portable battery or accumulator.

Safety way to remove the battery or the battery from the equipment: Remove the old battery or battery pack, follow the steps in reverse order than the assembly. To prevent contamination of the environment and bring on possible threat to human and animal health, the old battery or the battery put it in the appropriate container at designated collection points. Do not dispose of batteries or battery together with other waste. It is recommended that you use local, free reimbursement systems batteries and accumulators. The battery shall not be exposed to excessive heat such as sunshine, fire or the like.

CAUTION: The apparatus shall not be exposed to water (dripping or splashing) and no objects filled with liquids, such as vases, shall be placed on the apparatus.

Disposal of your old appliance

1. All electrical and electronic products should be disposed of separately from the municipal waste stream via designated collection facilities appointed by the government or the local authorities.
2. The correct disposal of your old appliance will help prevent potential negative consequences for the environment and human health.
3. For more detailed information about disposal of your old appliance, please contact your city office, waste disposal service or the shop where you purchased the product.

Disposal of waste batteries/accumulators

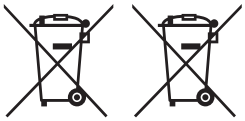

Pb

1. This symbol may be combined with chemical symbols for mercury(Hg), cadmium(Cd) or lead(Pb) if the battery Contains more that 0.0005% of mercury,0.002% of cadmium or 0.004% of lead.
2. All batteries/accumulators should be disposed separately from the municipal waste stream via designated collection facilities appointed by the government or the local authorities.
3. The correct disposal of Your old batteries/accumulators will help to prevent potential negative consequences for the environment, animal and human health.
4. For more detailed information about disposal of Your old batteries/accumulators, please contact Your city office, waste disposal service or the shop where You purchased the product.

CE

LG Electronics hereby declares that this/these product(s) is/are in compliance with the essential requirements and other relevant provisions of Directive 2004/108/EC, 2006/95/EC, 2009/125/EC and 2011/65/EU.

Please contact to the following address for obtaining a copy of the DoC (Declaration of Conformity).

Contact office for compliance of this product:

LG Electronics Inc.
EU Representative, Krijgsman 1,
1186 DM Amstelveen, The Netherlands

- Please note that this is NOT a Customer Service contact point. For Customer Service Information, see Warranty Card or contact the dealer that you purchased this product.

Table of Contents

1 Getting Started

2 Safety Information
7 Unique Features
7 Accesories
8 Playable file Requirement
8 – Music file requirement
8 – Compatible USB Devices
8 – USB device requirement
9 Remote Control
10 Front Panel
12 Rear Panel (CM4540)
13 Rear Panel (CM4440, CM4340)

2 Connecting

14 Connecting to speakers
14 – Attaching the speakers to the unit
14 – Attaching the subwoofer to the unit. (CM4540)
15 Antenna Connection
15 Optional Equipment Connection
15 – USB Connection
16 – AUX IN Connection
16 – PORT. IN Connection

3 Operating

17 Basic Operations
17 – CD/USB Operations
17 – Auto Play
18 Other Operations
18 – Programmed Playback
18 – Deleting Programmed list
18 – Searching for a folder
19 – Deleting an MP3/WMA file
19 – Turn off the sound temporarily
19 – Displaying file information
19 – DEMO
19 – AUTO DJ playback
20 Radio Operations
20 – Listening to the radio
20 – Presetting the Radio Stations
20 – Deleting all the saved stations
20 – Improving poor FM reception
20 – Seeing information about a Radio station
21 Sound adjustment
21 – Setting the surround mode
22 Setting the Clock
22 – Using your player as an alarm clock
22 – Sleep Timer Setting
22 – Dimmer
22 Auto power down
23 Advanced Operations
23 – Listening to the sound from your external device
23 – Recording to USB
23 – To select recording bit rate and speed
23 – Dubbing USB to USB

4 Troubleshooting

25 Troubleshooting

5 Appendix

26 Specifications
27 Speaker specifications
28 Maintenance
28 – Handling the Unit
28 – Notes on Discs

Unique Features

USB Direct Recording

Records music to your USB device.

AUTO DJ

Blends the end of one song into the beginning of another for seamless playback.

Accesories

Please check and identify the supplied accessories.

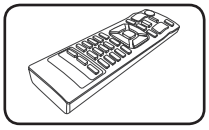

Remote Control (1)

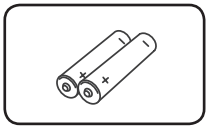

Batteries (2)

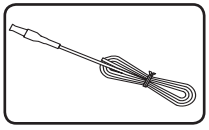

FM Antenna (1)

Playable file Requirement

Music file requirement

MP3/WMA file compatibility with this unit is limited as follows.

- Sampling frequency : within 32 to 48 kHz (MP3), within 32 to 48 kHz (WMA)
- Bit rate : within 32 to 320 kbps (MP3), 40 to 192 kbps (WMA)
- Maximum files : Under 999
- File extensions : ".mp3"/".wma"
- CD-ROM file format : ISO 9660/JOLIET
- We recommend that you use Easy-CD Creator, which creates an ISO 9660 file system.
- You have to set the disc format option to [Mastered] in order to make the discs compatible with the LG players when formatting rewritable discs. When setting the option to Live File System, you cannot use it on LG players. (Mastered/Live File System : Disc format system for Windows Vista)

The DTS is not supported. In case of DTS audio format, audio is not output.

Compatible USB Devices

- MP3 Player : Flash type MP3 player.
- USB Flash Drive :
  Devices that support USB2.0 or USB1.1.
- The USB function of this unit does not support all USB devices.

USB device requirement

- Devices which require additional program installation when you have connected it to a computer, are not supported.
- Do not extract the USB device while in operation.
- For a large capacity USB, it may take longer than a few minute to be searched.
- To prevent data loss, back up all data.
- If you use a USB extension cable or USB hub, the USB device is not recognized.
- Using NTFS file system is not supported. (Only FAT(16/32) file system is supported.)
- This unit is not supported when the total number of files is 1,000 or more.
- External HDD, Card readers, Locked devices, or hard type USB devices are not supported.
- USB port of the unit cannot be connected to PC. The unit cannot be used as a storage device.
- Some USB may not work with this unit.

Remote Control

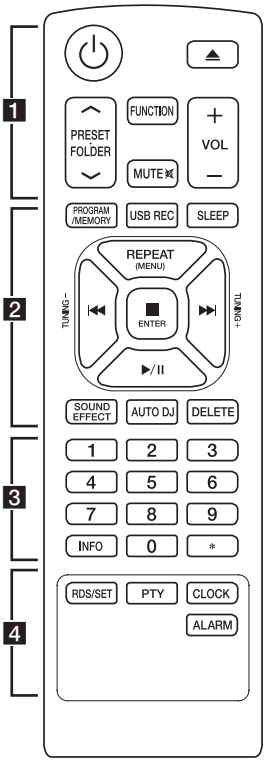

Replacement of battery

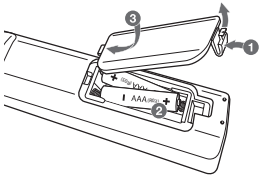

Remove the battery cover on the rear of the Remote Control, and insert two (size AAA) batteries with ⊕ and ⊖ matched correctly.

• • • • • • **1** • • • • • •

⏻ (Power) : Switches the unit ON or OFF.

⏏ (Open/Close) : Opens and closes the disc tray.

PRESET·FOLDER ∧/∨ :
- Searches for a folder of MP3/WMA files. When a CD/USB containing MP3/WMA files in several folders is being played, press **PRESET·FOLDER ∧/∨** to select the folder you want to play.
- Chooses a preset number for a radio station.

FUNCTION : Selects the function and input source.

MUTE 🔇 : Mutes the sound.

VOL +/- : Adjusts speaker volume.

• • • • • • **2** • • • • • •

PROGRAM/MEMORY :
- Stores radio stations.
- Creates a playlist you want to listen to.

USB REC : USB direct recording.

SLEEP : Sets the system to turn off automatically at a specified time. (Dimmer : The display window will be darkened by half.)

REPEAT(MENU) : Listens to your tracks/files repeatedly or randomly.

⏮/⏭ (Skip/Search) :
- Skips Fast backward or Forward.
- Searches for a section within a track/file.

TUNING-/+ : Selects the radio station.

■ **ENTER** :
- Stops playback or recording.
- Cancels DELETE function.

▶/II (Play/Pause) :
- Starts or pauses playback.
- Selects STEREO/MONO.

SOUND EFFECT : Chooses sound impressions.

AUTO DJ : Selects the AUTO DJ mode. (For more information refer to page 19)

DELETE : Deletes MP3/WMA files.

• • • • • • **3** • • • • • •

0 to **9** numerical buttons : Selects numbered tracks/files, or preset number.

INFO : Sees informations about your music. An MP3 file often come with ID3 tag. The tag gives the Title, Artist, Album or Time information.

✱ : The button is not available for any function.

• • • • • • **4** • • • • • •

RDS/SET :
- RDS (Radio Data System).
- Confirms the clock and the alarm setting.

PTY : Searches radio stations by radio type.

CLOCK : Sets a clock and checks a time.

ALARM : Uses your player as an alarm clock.

Front Panel

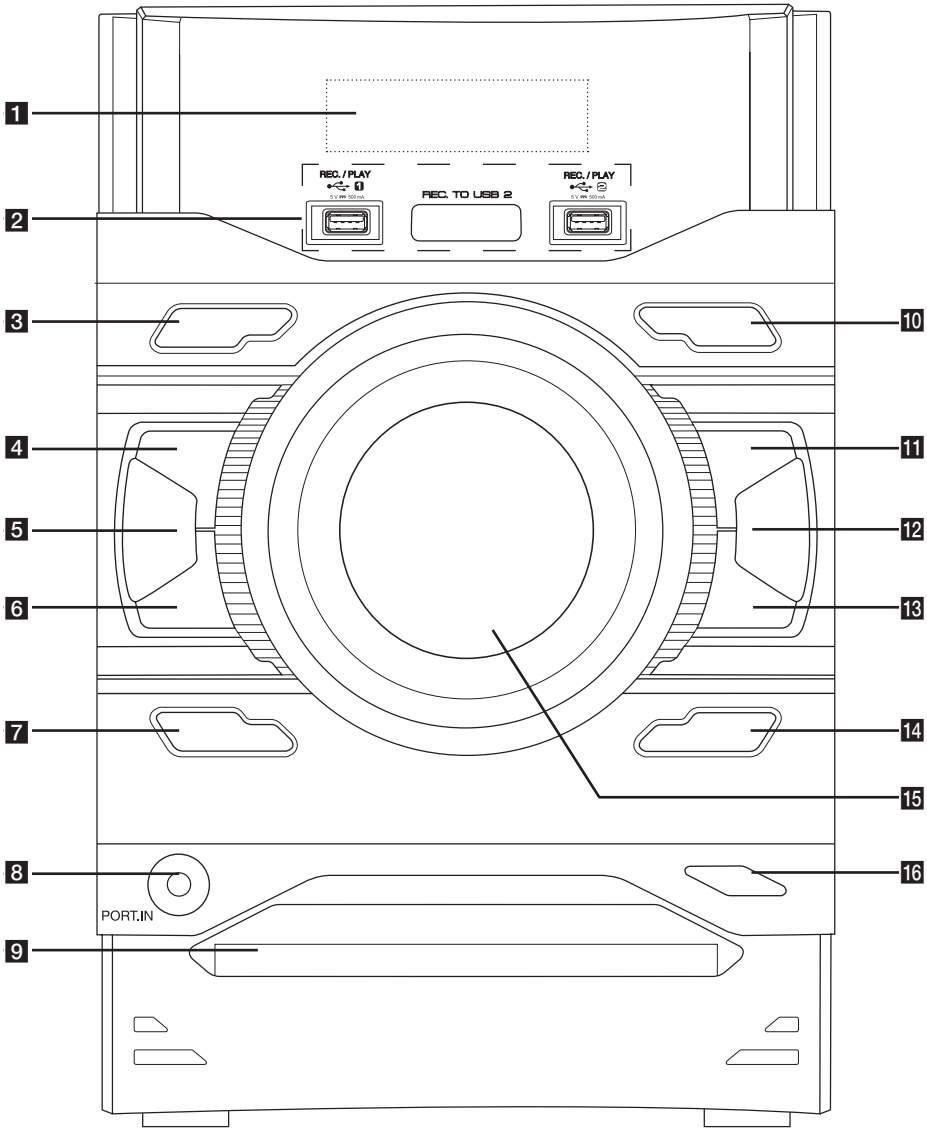
1
2
3
4
5
6
7
8
9
10
11
12
13
14
15
16
REC. / PLAY
REC. TO USB 2
REC. / PLAY
PORT.IN

1 Display window

2 USB 1/ USB 2
Plays the audio files by connecting the USB device.

USB REC.
Records to USB.

3 ⏻/I (Power)
Switches the unit ON or OFF.

4 ☐(Stop)
Stops playback or recording.

5 **AUTO DJ**
Selects the AUTO DJ mode.
(For more informaion refer to page 19)

6 I<< (Skip/Search)
- Searches backward.
- Skips to the previous track/file.

7 **DEMO/RDS**
- Demonstrates each of functions.
- RDS (Radio Data System).

8 **PORT. IN**

9 Disc tray

10 **FUNCTION**
Selects the function or input source.

11 **>II**
ST./MO.
- Starts or pauses playback.
- Selects Stereo/Mono.

12 **LG EQ**
You can choose sound impressions.

13 >>I (Skip/Search)
- Searches forward.
- Skips to the next track/file.

14 **BASS BLAST**
Selects the BASS BLAST or BYPASS sound directly.

15 Master Volume
Adjusts volume of speaker.

16 ⏏ (Open/Close)
Opens or closes the disc tray.

Rear Panel (CM4540)

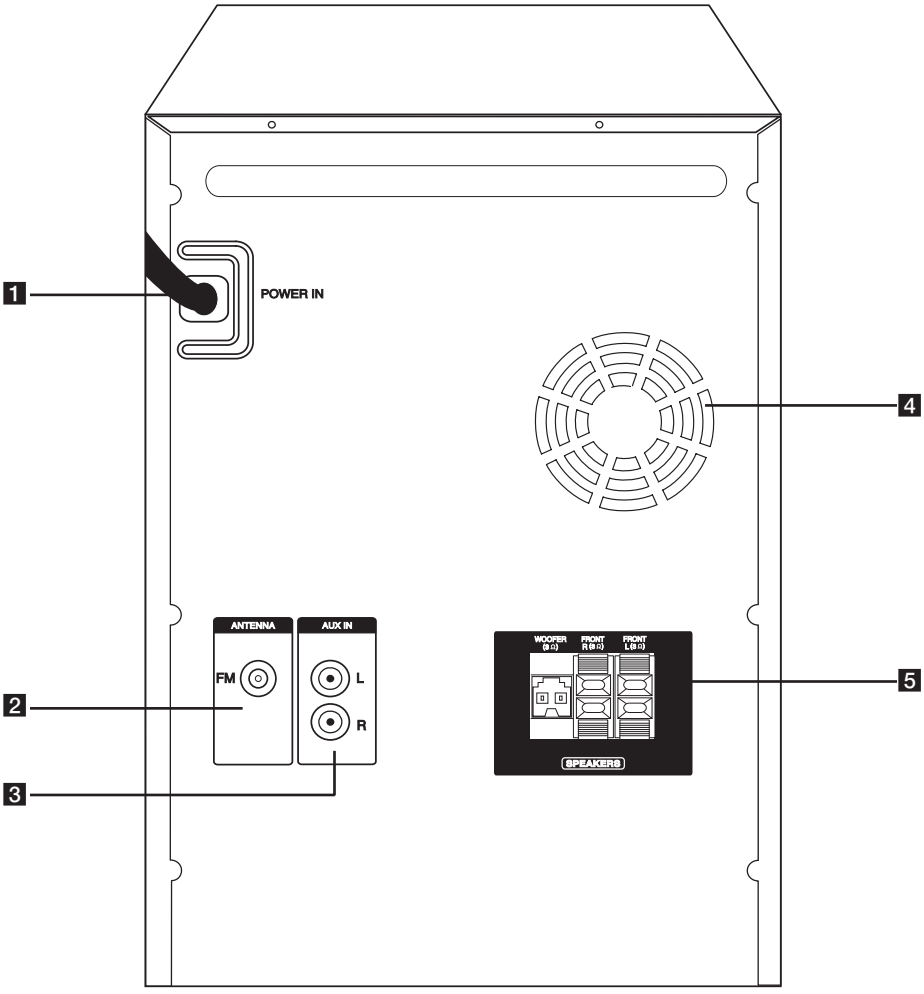

1 **POWER IN**
2 **ANTENNA (FM)**
3 **AUX IN (L/R)** connectors
4 Cooling fan
5 **SPEAKERS** terminal/cord

Rear Panel (CM4440, CM4340)

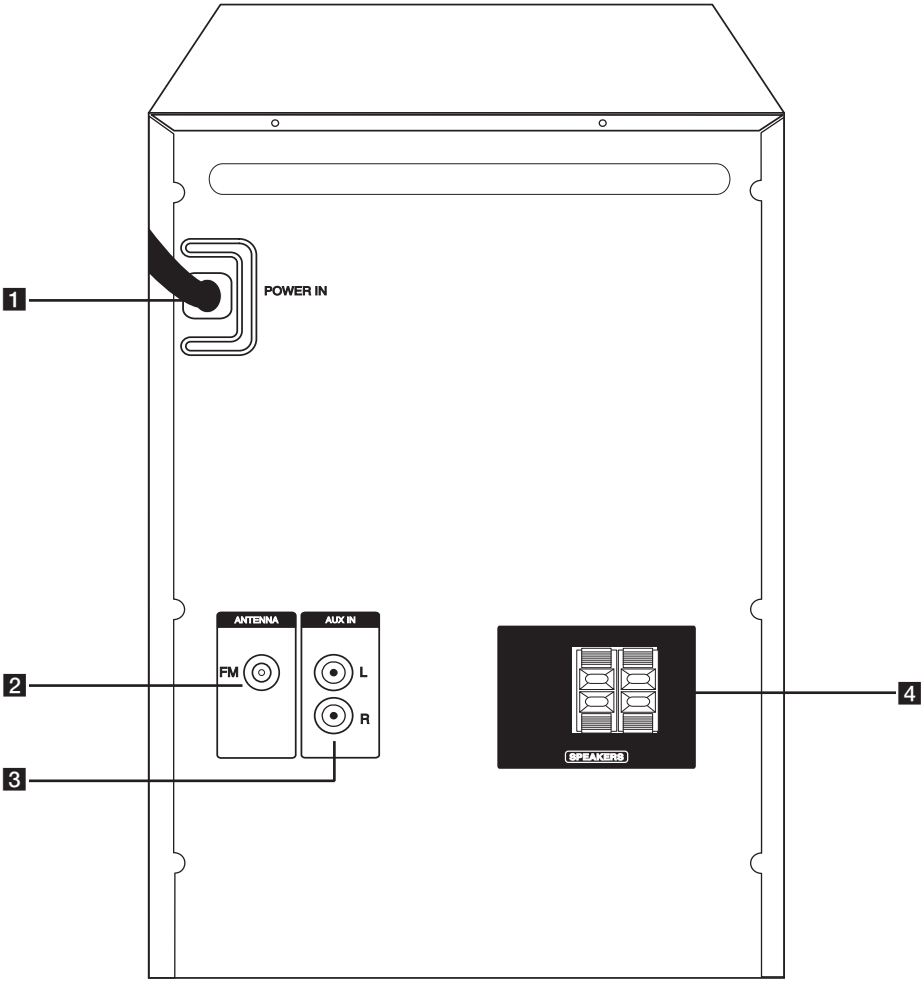

1 **POWER IN**
2 **ANTENNA (FM)**
3 **AUX IN (L/R)** connectors
4 **SPEAKERS** terminal

Connecting to speakers

Attaching the speakers to the unit

To connect the cable to the unit, press each plastic finger pad to open the connection terminals on the unit. Insert the wire and release the finger pad.

Connect the black stripe of each wire to the terminals marked - (minus) and the other end to the terminals marked + (plus).

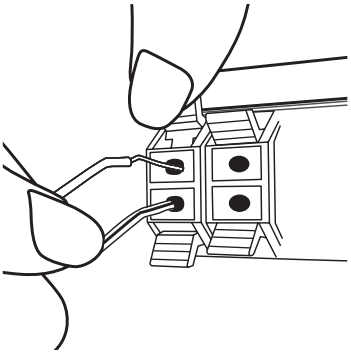

Attaching the subwoofer to the unit. (CM4540)

Connect a woofer cord to the player.
When connecting a woofer cord to the player, insert the connector until it clicks.

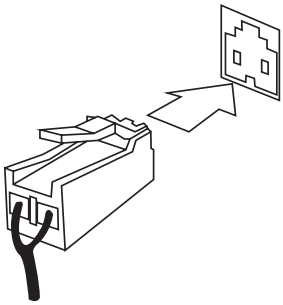

Color	Speaker
Orange	Sub woofer
Red	Front R
White	Front L

Caution

- Be careful to make sure children do not put their hands or any objects into the *speaker duct.
  *Speaker duct: A hall for plentiful bass sound on speaker cabinet (enclosure)
- The speakers contain magnet parts, so color irregularity may occur on the TV screen or PC monitor screen. Please use the speakers far away from either TV screen or PC monitor.
- Do not connect any other speaker except sub woofer speaker to the sub woofer connection terminal on the rear of the unit.

Antenna Connection

Connect the antenna to the antenna port on the back of the unit. Be sure to extend the FM wire antenna fully.

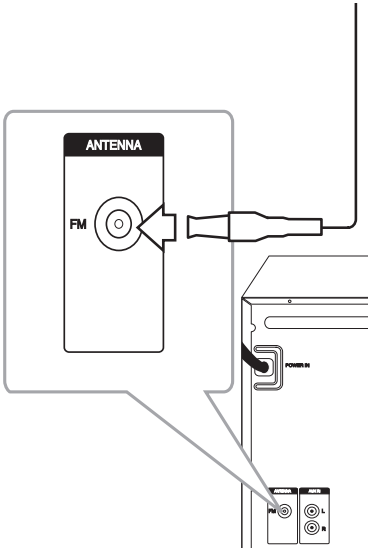

Optional Equipment Connection

USB Connection

Connect the USB device (or MP3 player, etc.) to the USB port on the unit.

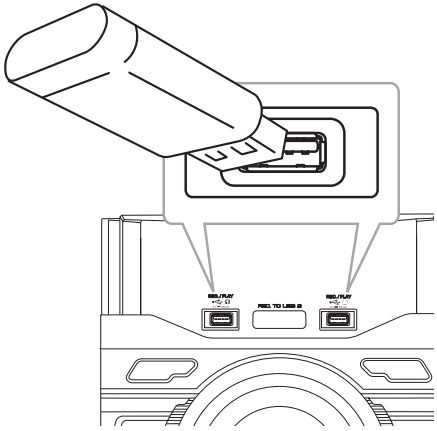

Note

Removing the USB Device from the unit.

1. Choose a different function/mode or press ■ **ENTER** on the remote control or ☐ on the unit twice in a row.
2. Remove the USB device from the unit.

AUX IN Connection

Connect an output of auxiliary device (Camcoder, TV, Player, etc) to the **AUX IN(L/R)** connector.

If your device has only one output for audio(mono), connect it to the left (white) audio jack on the unit.

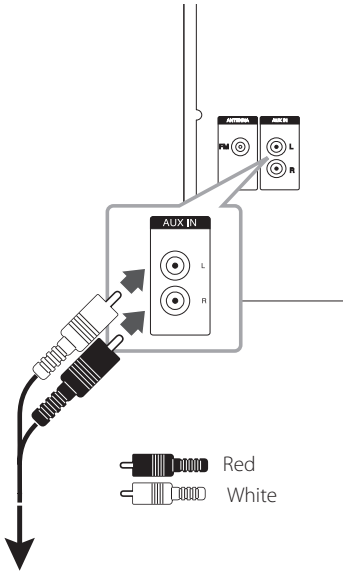

To the audio output jacks of your component
(Camcorder, TV, Players,etc)

PORT. IN Connection

Connect an output (earphone or line out) of portable device (MP3 or PMP etc) to the **PORT. IN** connector.

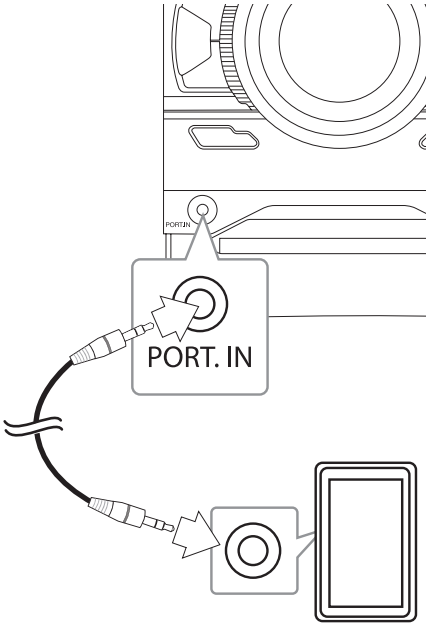

Basic Operations

CD/USB Operations

1. Insert the disc by pressing ⏏ on the remote control or ⏏ on the unit.
   Connect the USB device to the USB 1/2 port.
2. Select the CD or USB function by pressing **FUNCTION**.
3. Select a track/file you want to play by pressing ⏮/⏭ on the remote control or ⏮ / ⏭ on the unit.

To	Do this
Stop	Press ■**ENTER** on the remote control or ☐ on the unit.
Playback	Press ▶/II on the remote control or >II on the unit.
Pause	During playback, press ▶/II on the remote control or >II on the unit.
Skipping to the next/ previous track/file	Press ⏮/⏭ on the remote control or ⏮ / ⏭ on the unit to skip the track/file in stop status. During playback, press ⏭ on the remote control or ⏭ on the unit to go to the next track/file. Playing less than 2 seconds, press ⏮ on the remote control or ⏮ on the unit to go to the previous track/file. Playing after 3 seconds, press ⏮ on the remote control or ⏮ on the unit to go to the beginning of the track/file.
Selecting a track/file directly	Press **0** to **9** numerical buttons on the remote control to go to the desired file or track directly.
Searching for a section within a track/file	Press and hold ⏮/⏭ on the remote control or ⏮ / ⏭ on the unit during playback and release it at the point you want to listen to.
Playing repeatedly or randomly	Press **REPEAT(MENU)** on the remote control repeatedly. Refer to the note for details about the display change.

Auto Play

AUDIO/MP3/WMA CD is played automatically after tray is open & closed.

Automatically switches to the CD function if tray is open & closed when there is no disc in tray.

Note

- The display changes in the following order.

USB	MP3/WMA/CD	AUDIO CD
RPT 1	RPT 1	RPT 1
RPT*DIR	RPT DIR	-
RPT ALL	RPT ALL	RPT ALL
RANDOM	RANDOM	RANDOM
OFF	OFF	OFF

*DIR : Directory

- When you play Program list, only RPT 1 and RPT ALL are available.
- Even after restarting the unit or switching one function to another, you can listen to music from the point where it's last been played.
- If you leave the disc tray open for 5minutes, it will close automatically.

Other Operations

Programmed Playback

The program function enables you to make a playlist of your favourite tracks/files from a disc or USB device. A program can contain 20 tracks/files for each media (CD, USB1,USB2). Possible to save a total of 60 tracks/files.

1. Press **PROGRAM/MEMORY** on the remote control in stop status.
2. Press **⏮/⏭** on the remote control to select a track/file.
3. Press **PROGRAM/MEMORY** to save and select a next track/file.
4. Repeat steps 2-3 to store other tracks/files. (You can modify the list by pressing **PRESET·FOLDER ∧/∨** to select the program number.)
5. Press **PROGRAM/MEMORY** once again.

To play the programmed list, press **►/❚❚** after you make the list.

Note

When making or modifying the programmed list, REPEAT mode is off.

Deleting Programmed list

Deleting function is worked only on the edit mode.

1. Press **PROGRAM/MEMORY** on the remote control in stop status.
2. Select a song by pressing **PROGRAM/MEMORY** or **PRESET·FOLDER ∧/∨** repeatedly.
3. Press **DELETE** while a song is selected.

Note

- Programmed list is cleared in the case below.
  - Removing the disc or the USB device.
  - Deleting or recording music files in the USB device.
- Program is switched off in the case below.
  - Changing the function to the others.
  - Turning off and on the unit.
  - Operating the numeric buttons on the remote control.

Searching for a folder

1. Press **PRESET·FOLDER ∧/∨** on the remote control repeatedly until a desired folder appears in the display window.
2. Press **►/❚❚** to play it. The first file of the folder will be played.

Note

- CD / USB Folders/Files are recognized as below.

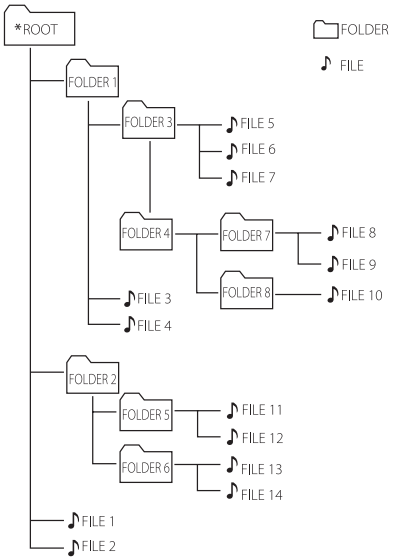

- If there is no file in a folder, the folder will not appear.
- Folders will be presented as the following order;
  ROOT → FOLDER 1 → FOLDER 3 → FOLDER 7 → FOLDER 8 → FOLDER 5 → FOLDER 6
- File will be played from ♪ file No.1 to ♪ file No.14 one by one.
- Files and folders will be presented in order recorded and may be presented differently according to the record circumstances.
- *ROOT : The first screen you can see when a computer recognize the CD/USB is "ROOT".

Deleting an MP3/WMA file

You can delete a file, folder or format by pressing **DELETE**. (USB only)

1. Press **DELETE** repeatedly while selecting the MP3/WMA file. This function is supported only in stop status. The display changes in the following order.

   - DEL FILE : Deletes file.
   - DEL DIR : Deletes folder.
   - FORMAT : Formats USB.

2. To delete file/folder or format, press **►/II** on the remote control or **>II** on the unit.
3. If you want to exit the current mode, press **■ ENTER** on the remote control or press **□** on the unit.

Caution

- Do not extract the USB device during operation.(play, delete, etc.)
- Regular back up is recommended to prevent data loss.
- The delete function may not be supported according to the USB status.

Turn off the sound temporarily

Press **MUTE** on the remote control to mute your sound.

You can mute your unit, for example, to answer the telephone, the "MUTE" will appear in the display window.

To cancel it, press **MUTE** again or change the volume level.

Displaying file information

While playing an MP3 file containing file information, you can display the information by pressing **INFO**.

DEMO

In power off state, press **DEMO/RDS** on the unit once. The unit will power on and display the each of functions in the display window. To cancel the DEMO function, press **DEMO/RDS** once more.

Note

You can enjoy other functions during the DEMO. Then the DEMO will pause to temporary.
- Without input key in 10 sec, the DEMO will play back automatically.

AUTO DJ playback

Auto DJ blends the end of one song into the beginning of another for seamless playback. It equalizes volume across tracks for uninterrupted playback.

Press **AUTO DJ** on the remote control or unit repeatedly, the display changes as followings. RANDOM (AUTO DJ RANDOM) -> RPT (AUTO DJ SEQUENTIAL) -> (AUTO DJ OFF)

Mode	Display Window	Description
OFF	- (AUTO DJ OFF)	-
RANDOM	RANDOM (AUTO DJ RANDOM)	The music is played randomly on this mode.
REPEAT	RPT (AUTO DJ SEQUENTIAL)	The music is played repeatedly on this mode.

Note

- Searching for a section within a track/file or playing repeatedly or randomly is not supported on the AUTO DJ mode.
- During AUTO DJ mode, it is not available to search file by pressing **PRESET·FOLDER** **∧/∨** on the remote control.
- If you move to other functions or stop the music using **□** on the unit (or **■ ENTER** on the remote control) on AUTO DJ mode, AUTO DJ will be disable.
- AUTO DJ is not supported in the music file whose length is less than 60 seconds.
- During recording, AUTO DJ is not available.
- Only AUTO DJ SEQUENTIAL is selected when played Program list.

Radio Operations

Be sure that FM antenna is connected.
(Refer to page 15)

Listening to the radio

1. Press **FUNCTION** until FM appears in the display window.
   The last received station is tuned in.
2. Auto tuning : Press **TUNING -/+** on the remote control or **|<< / >>|** on the unit for about 2 seconds until the frequency indication starts changing, then release. scanning stops when the unit tunes in a station.

   Manual tuning: Press **TUNING -/+** on the remote control or **|<< / >>|** on the unit repeatedly.
3. Adjust the volume by pressing **VOL +/-** on the remote control or by rotating volume knob on the unit repeatedly.

Presetting the Radio Stations

You can preset 50 stations for FM.
Before tuning, make sure to turn down the volume.

1. Press **FUNCTION** until FM appears in the display window.
2. Select the desired frequency by pressing **TUNING-/+** on the remote control or **|<< / >>|** on the unit.
3. Press **PROGRAM/MEMORY**. A preset number will blink in the display window.
4. Press **PRESET·FOLDER ∧/∨** to select the preset number you want.
5. Press **PROGRAM/MEMORY** on the remote control . The station is stored.
6. Repeat steps 2 to 5 to store other stations.
7. To listen to a preset station, press **PRESET·FOLDER ∧/∨** or **0** to **9** numerical buttons.

Deleting all the saved stations

1. Press and hold **PROGRAM/MEMORY** for two seconds. "ERASEALL" will blink in the unit display.
2. Press **PROGRAM/MEMORY** to erase all saved radio stations.

Improving poor FM reception

Press **▶/II** on the remote control or **>II** on the unit. This will change the tuner from stereo to mono. Then the reception will be better than before.

Seeing information about a Radio station

The FM tuner is supplied with the RDS (Radio Data System) facility. This shows information about the radio station being listened to. Press **RDS/SET** on the remote control or **DEMO/RDS** on the unit repeatedly to cycle through the various data types:

PS	(Programme Service Name) The name of the channel will appear in the display.
PTY	(Programme Type Recognition) The programme type (e.g. Jazz or News) will appear in the display.
RT	(Radio Text) A text message contains special information from the broadcast station. This text may scroll across the display.
CT	(Time controlled by the channel) This shows the time as broadcast by the station.

You can search the radio stations by programme type by pressing **RDS/SET** on the remote control or **DEMO/RDS** on the unit. The display will show the last PTY in use. Press **PTY** one or more times to select your preferred programme type. Press and hold **TUNING -/+**. The tuner will search automatically. When a station is found, the search will stop.

Sound adjustment

Setting the surround mode

This system has a number of pre-set surround sound fields. You can select a desired sound mode by using **SOUND EFFECT** on the remote control.

The displayed items for the Equalizer may be different depending on sound sources and effects.

On Display	Description
NATURAL	You can enjoy comfortable and natural sound.
AUTO EQ	Realizes the sound equalizer that is the most similar to the genre of which is included in the MP3 ID3 tag of song files.
POP CLASSIC JAZZ ROCK	This program lends an enthusiastic atmosphere to the sound, giving you the feeling you are at an actual rock, pop, jazz or classic concert.
MP3 -- OPT	This function is optimized for compressible MP3 file. It improves the treble sound.
BASS	Reinforces the treble, bass and surround sound effect.
LOUDNESS	Improves the bass and treble sound.
FOOT BALL	You can enjoy the sound effect FOOTBALL STADIUM.
BYPASS	You can enjoy the sound without equalizer effect.

Note

- On some speakers, sound may not be heard or heard in low sound depending on the sound mode.
- Maybe you need to reset the surround mode, after switching the input, sometimes even after the sound track changed.
- By pressing **BASS BLAST** on the unit you can directly select the BYPASS or BASS BLAST sound.

Setting the Clock

1. Turn the unit on.
2. Press and hold **CLOCK**.
3. Select time mode by pressing **⏮ / ⏭** on the remote control.
   - AM 12:00 (for an AM and PM display) or 0:00 (for a 24 hour display)
4. Press **RDS/SET** to confirm your selection.
5. Select the hours by pressing **⏮ / ⏭** on the remote control.
6. Press **RDS/SET**.
7. Select the minutes by pressing **⏮ / ⏭** on the remote control.
8. Press **RDS/SET**.

Using your player as an alarm clock

1. Turn the unit on.
2. Press and hold **ALARM**.
3. Press **⏮ / ⏭** on the remote control to change the hours and minutes and press **SET** to save.
4. Press **⏮ / ⏭** on the remote control to select function and press **SET** to save.
5. Press **⏮ / ⏭** on the remote control to change the volume and press **SET** to save. The clock icon "◷" shows that the alarm

Note

- If you set the clock time, you can check the time by pressing **CLOCK** even when the player is turned off.
- If you set the clock time and alarm, you can check the alarm icon "◷" by pressing **CLOCK** even when the player is turned off.
- If you set the clock time and alarm, you can check the alarm icon "◷" and setting informaiton by pressing **ALARM** even when the unit is turned off.
- Press **ALARM**, you can selects a **ALARM** on / off mode.

Sleep Timer Setting

Press **SLEEP** repeatedly to select delay time between 10 and 180 minutes. After the delay time, the unit will be turned off.

To cancel the sleep function, press **SLEEP** repeatedly until "SLEEP 10" appears, and then press **SLEEP** once again while "SLEEP 10" is displayed.

Note

- You can check the remaining time before the unit is turned off.
- Press **SLEEP**. The remaining time appears in the display window.

Dimmer

Press **SLEEP** once. The display window will be darkened by half. To cancel it, press **SLEEP** repeatedly until dim off.

Auto power down

This unit will turn off itself to save electric consumption in the case were main unit is not connected to external device and is not used for 20 minutes.
So does this unit after six hours since Main unit has been connected to other device using analogue input.

Advanced Operations

Listening to the sound from your external device

The unit can be used to play the sound from many types of external device. (Refer to page 16)

1. Connect the external device to the **AUX IN(L/R)** or **PORT. IN** connector of the unit.
2. Turn the power on by pressing ⏻ on the remote control or ⏻/I on the unit.
3. Select the AUX or PORTABLE function by pressing **FUNCTION**.
4. Turn the external device and start playing it

Recording to USB

You can record a various sound source to USB. (CD, USB, AUX, PORTABLE, FM)

1. Connect the USB device to the unit.
2. Select a function by pressing **FUNCTION**.

   One track/file recording - You can record to USB after playing a track/file you want.

   All tracks/files recording - You can record to USB after stop.

   Program list recording - After showing the programmed list, you can record it to USB. (Refer to page 18)

3. Start the recording by pressing **USB REC** on the remote control or **USB REC.** on the unit.

   -If you connect both USB1 and USB2, press **USB REC** on the remote control or **USB REC.** on the unit when USB1 or USB2 which you want to record blinks in the display window.
4. To stop recording, press ■ **ENTER** on the remote control or □ on the unit.

Pausing recording

During recording, press ►/II on the remote control or >II on the unit to pause recording. Press it again to restart recording.
(Only TUNER, AUX, PORTABLE)

To select recording bit rate and speed

1. Press **USB REC** on the remote control or **USB REC.** on the unit for longer than 3 seconds.
2. Use I◄◄/►►I on the remote control or I<< / >>I on the unit to select the bit rate.
3. Press **USB REC** on the remote control or **USB REC.** on the unit again to select the recording speed.
4. Press I◄◄/►►I on the remote control or I<< / >>I on the unit to select a desired recording speed : (AUDIO CD only)

   X1 SPEED
   - You can listen to music while recording it.

   X2 SPEED
   - You can just record the music file.
5. Press **USB REC** on the remote control or **USB REC.** on the unit to finish the setting.

Dubbing USB to USB

You can do dubbing various sound sources in USB1 to USB2 on USB function.

1. Connect a USB device including desired sound files to USB1.
2. Connect another USB device to USB2.
3. Start the recording by pressing **USB REC** on the remote control or **USB REC.** on the unit.
4. To stop recording, press ■ **ENTER** on the remote control or □ on the unit.

The making of unauthorized copies of copy-protected material, including computer programs, files, broadcasts and sound recordings, may be an infringement of copyrights and constitute a criminal offense. This equipment should not be used for such purposes.
Be responsible
Respect copyrights

Note

- It is not supported to record music stored on bluetooth device.
- You can check the recording percentage rate for the USB record on the display window during the recording. (MP3/WMA CD Only)
- During recording MP3/WMA, there is no sound.
- When you stop recording during playback, the file that has been recorded at that time will be stored. (Except MP3/WMA files)
- Do not remove the USB device or turn off the unit during USB recording. If not, an incomplete file may be made and not deleted on PC.
- If USB recording does not work, the message like "NO USB", "ERROR", "FULL" or "NO REC" is displayed on the display window.
- Multi card reader device or External HDD can not be used for USB recording.
- A file is recorded by about 512 Mbyte when you record for a long term.
- You may not store more than 999 files.
- You can not record in AUTO DJ mode.
- It'll be stored as follows.

AUDIO CD	MP3/WMA
CD_REC TRK_001 TRK_002 ⋮	FILE_REC ABC(File name) DEF(File name) ⋮
The other source*	**TUNER**
OTHERS _REC AUDIO_001 AUDIO_002 ⋮	TUNER_REC AUDIO _001 _87-5FM AUDIO _002 _88-2FM ⋮

TUNER : The current recording frequency is shown.

* : AUX and the like.

Troubleshooting

Problem	Cause & Correction
No Power.	• The power cord is not plugged in. Plug in the power cord. • Check whether electricity failed. Check the condition by operating other electronic devices.
No sound.	• Check whether you select right function. Press **FUNCTION** and check the selected function. • Speaker cables are not connected correctly. Connect speaker cables correctly.
The unit does not start playback.	• An unplayable disc is inserted. Insert a playable disc. • No disc is inserted. Insert a disc. • The disc is dirty. Clean the disc. (Refer to 28 page) • The disc is inserted upside down. Place the disc with the label or printed side facing upwards.
Radio stations cannot be tuned in properly.	• The antenna is positioned or connected poorly. Connect the antenna securely. • The signal strength of the radio station is too weak. Tune to the station manually. • No stations have been preset or preset stations have been cleared (when being tuned by scanning preset channels). Preset some radio stations, see page 20 for details.
The remote control does not work properly.	• The remote control is too far from the unit. Operate the remote control within about 23 ft (7 m). • There is an obstacle in the path of the remote control and the unit. Remove the obstacle. • The batteries in the remote control are exhausted. Replace the batteries with new ones.

Specifications

General			
Model	CM4540	CM4440	CM4340
Power requirements	Refer to the main label.		
Power consumption	Refer to the main label.		
Dimensions (W x H x D)	(206 x 308 x 284) mm		
Net Weight (Approx.)	3.0 kg	3.0 kg	3.0 kg
Operating temperature	5 °C to 35 °C (41 °F to 95 °F)		
Operating humidity	5 % to 90 %		
Bus Power Supply	5 V ⎓ 500 mA		

Inputs	
AUX IN	2.0 Vrms (1 kHz, 0 dB), 75 Ω, RCA jack (L, R)
Port In	1.2 Vrms (3.5 mm stereo jack)

Tuner	
FM Tuning Range	87.5 to 108.0 MHz or 87.50 to 108.00 MHz

Amplifier				
Model		CM4540	CM4440	CM4340
Stereo mode		200 W + 200 W (3 Ω at 1 kHz, THD 20 %)	200 W + 200 W (3 Ω at 1 kHz, THD 20 %)	110 W + 110 W (4 Ω at 1 kHz, THD 20 %)
Surround mode	Front	200 W + 200 W (3 Ω at 1 kHz, THD 20 %)	200 W + 200 W (3 Ω at 1 kHz, THD 20 %)	110 W + 110 W (4 Ω at 1 kHz, THD 20 %)
	Subwoofer	200 W (3 Ω at 60 Hz, THD 20 %)		

CD	
Frequency Response	100 to 20,000 Hz
Signal-to-noise ratio	75 dB
Dynamic range	75 dB

Speaker specifications

Front speaker		
Model	CMS4540F	CMS4340F
Type	2 Way 2 Speaker	
Impedance	3 Ω	4 Ω
Rated Input Power	200 W	110 W
Max. Input power	400 W	220 W
Net Dimensions (W x H x D)	(266 x 306 x 263) mm	(200 x 306 x 200) mm
Net Weight	3.1 kg	2.2 kg

Subwoofer speaker	
Model	CMS4540W
Type	1 Way 1 Speaker
Impedance	3 Ω
Rated Input Power	200 W
Max. Input power	400 W
Net Dimensions (W x H x D)	(266 x 306 x 324) mm
Net Weight	4.7 kg

- Design and specifications are subject to change without notice.

Maintenance

Handling the Unit

When shipping the unit

Please save the original shipping carton and packing materials. If you need to ship the unit, for maximum protection, re-pack the unit as it was originally packed at the factory.

Keeping the exterior surfaces clean

Do not use volatile liquids such as insecticide spray near the unit.

Wiping with strong pressure may damage the surface.

Do not leave rubber or plastic products in contact with the unit for a long period of time.

Cleaning the unit

To clean the player, use a soft, dry cloth. If the surfaces are extremely dirty, use a soft cloth lightly moistened with a mild detergent solution. Do not use strong solvents such as alcohol, benzine, or thinner, as these might damage the surface of the unit.

Maintaining the Unit

The unit is a high-tech, precision device. If the optical pick-up lens and disc drive parts are dirty or worn, the picture quality could be diminished. For details, please contact your nearest authorized service center.

Notes on Discs

Handling Discs

Never stick paper or tape on the disc.

Storing Discs

After playing, store the disc in its case. Do not expose the disc to direct sunlight or sources of heat and never leave it in a parked car exposed to direct sunlight.

Cleaning Discs

Do not use strong solvents such as alcohol, benzine, thinner, commercially available cleaners, or anti-static spray intended for old vinyl records.

LG
Life's Good