LG
Life's Good

LED TV
LV54**

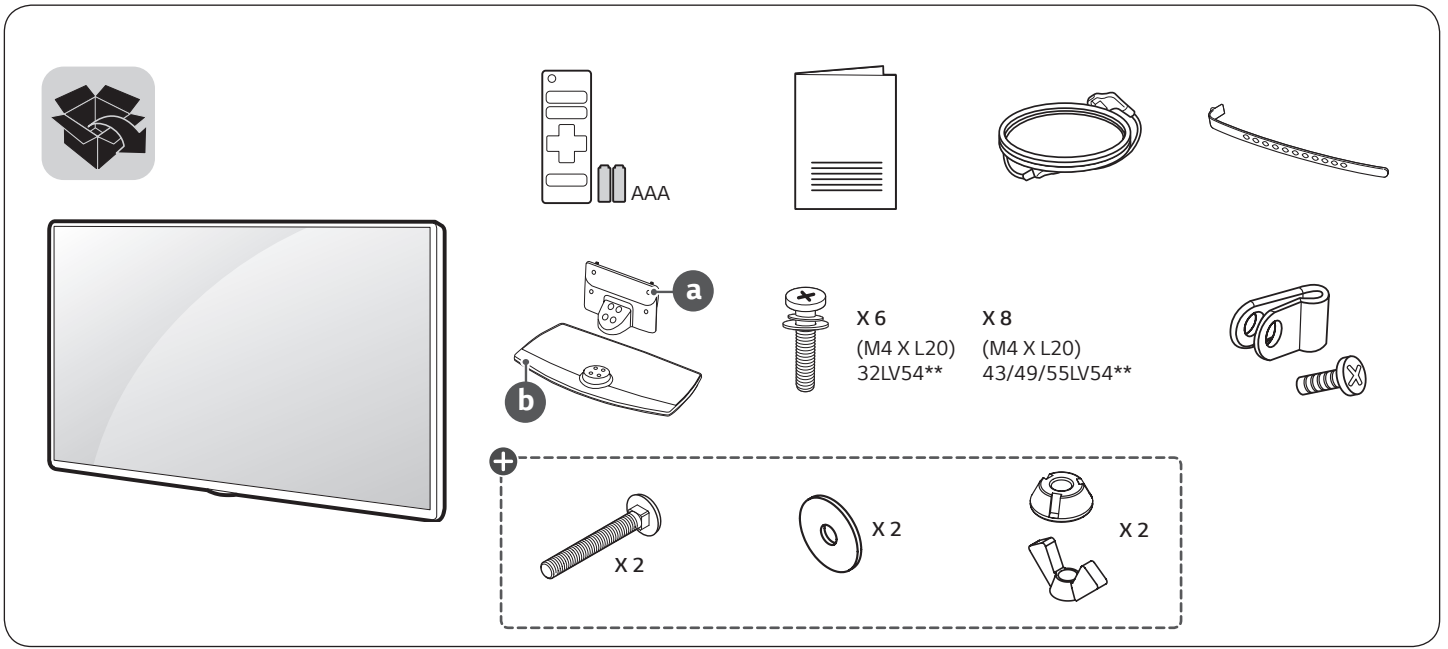

: Depending on model / Tergantung pada modelnya / حسب الطراز

www.lg.com

English

- Read **Safety and Reference.**
- For the power supply and power consumption, refer to the label attached to the product.

Bahasa Indonesia

- Baca **Keselamatan dan Referensi.**
- Untuk informasi catu daya dan konsumsi daya, baca label yang disertakan pada produk.

العربية

- قراءة **الأمان والمرجع.**
- لمعرفة المزيد حول مصدر الإمداد بالطاقة المطلوب ومعايير استهلاك الطاقة، راجع الملصق الموجود على المنتج.

1

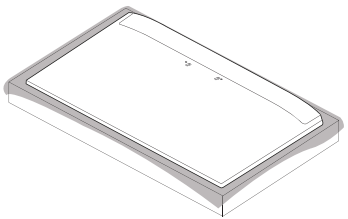

2

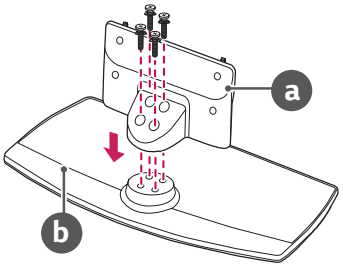

3-A 32LV54**

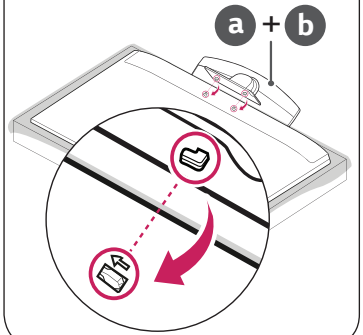

3-B 43/49/55LV54**

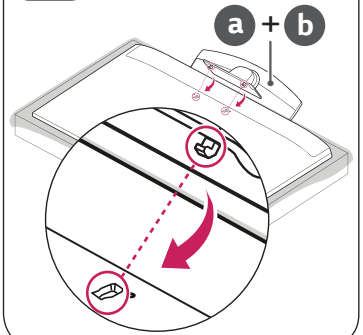

4-A 32LV54**

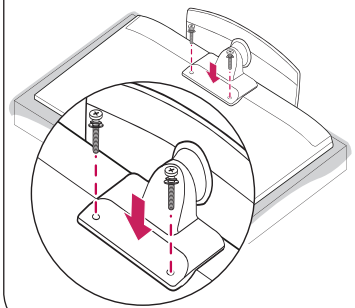

4-B 43/49/55LV54**

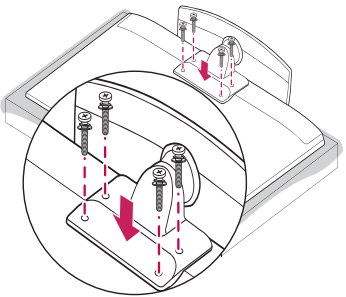

5

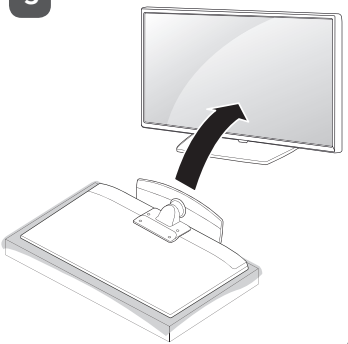

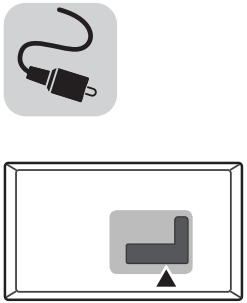

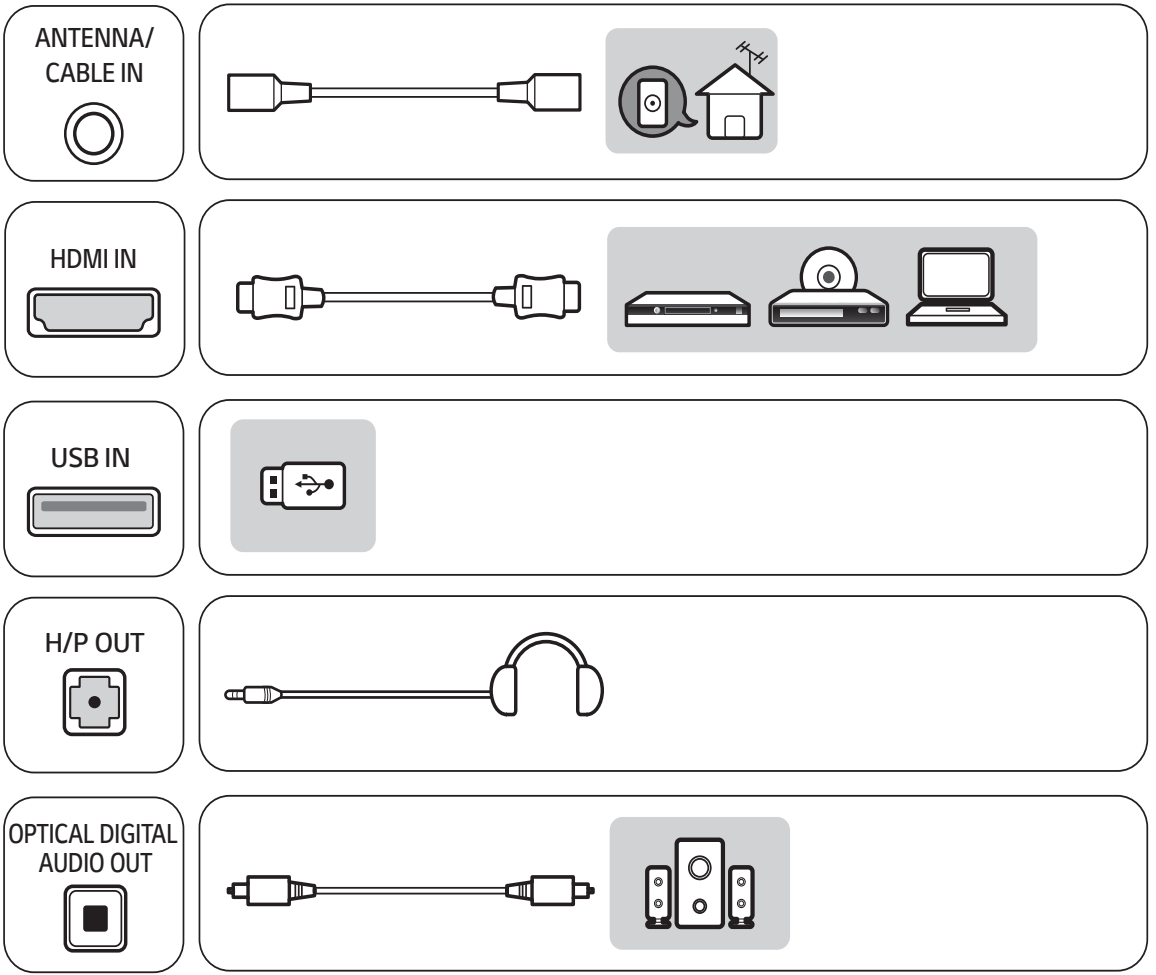
ANTENNA/
CABLE IN
HDMI IN
USB IN
H/P OUT
OPTICAL DIGITAL
AUDIO OUT

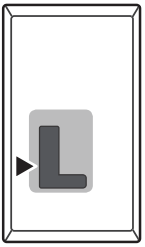
L

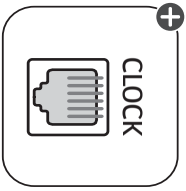
CLOCK

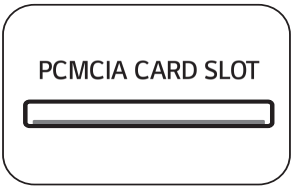
PCMCIA CARD SLOT

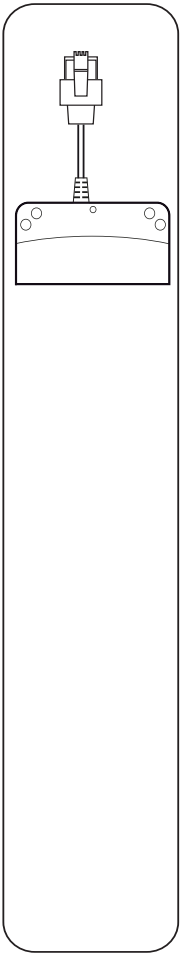

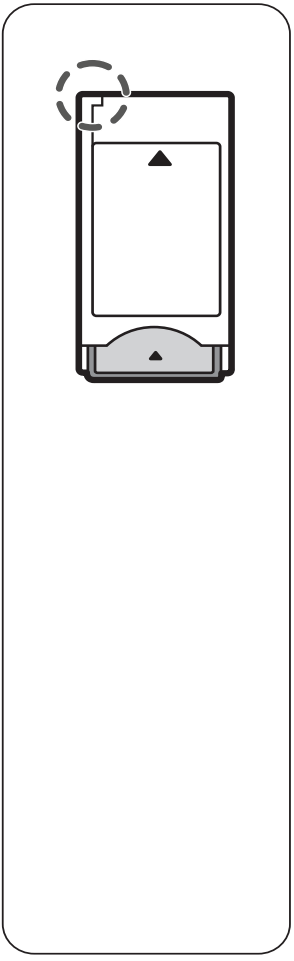

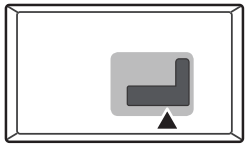

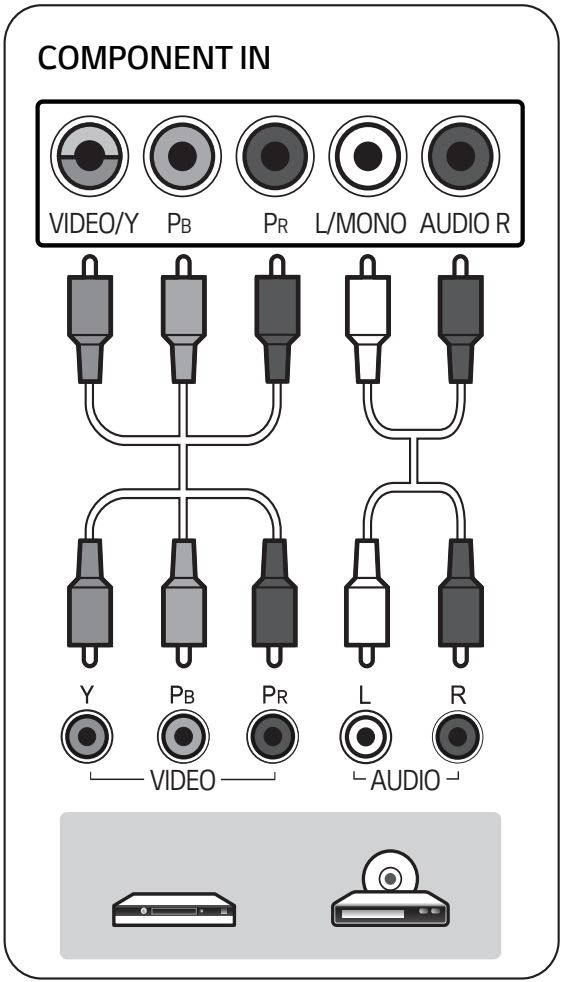
COMPONENT IN
VIDEO/Y
PB
PR
L/MONO
AUDIO R
Y
PB
PR
L
R
VIDEO
AUDIO

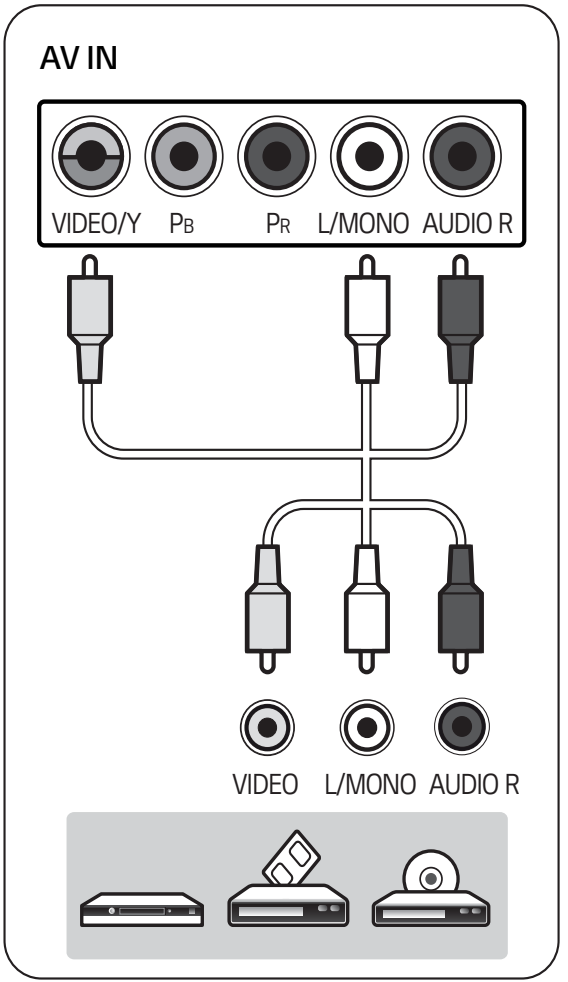
AV IN
VIDEO/Y
PB
PR
L/MONO
AUDIO R
VIDEO
L/MONO
AUDIO R

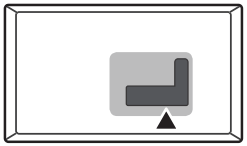

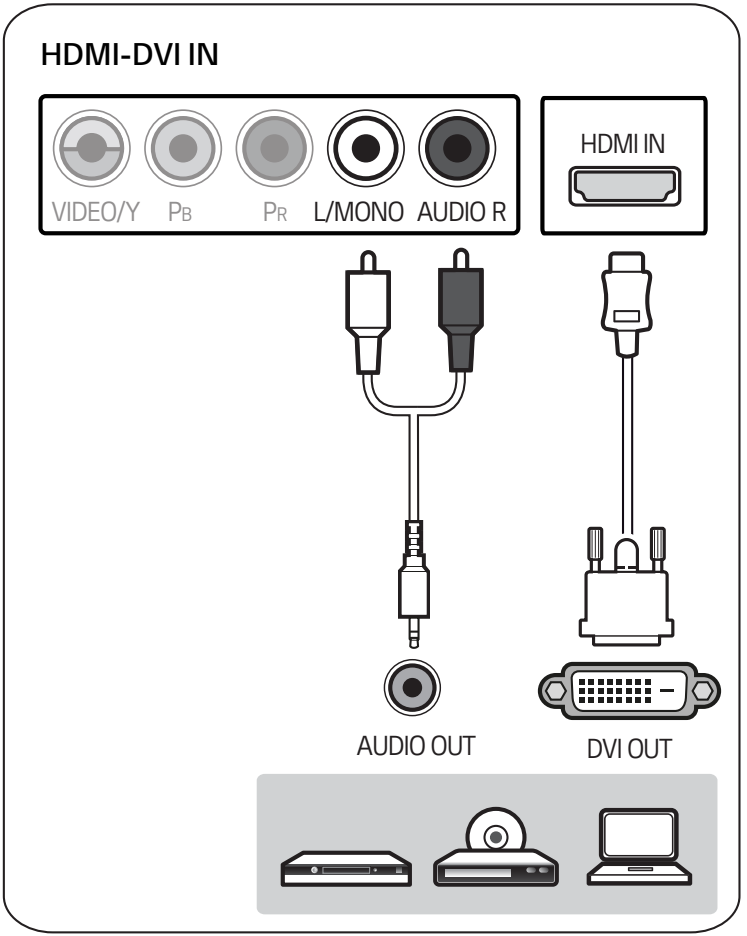
HDMI-DVI IN
VIDEO/Y
PB
PR
L/MONO
AUDIO R
HDMI IN
AUDIO OUT
DVI OUT

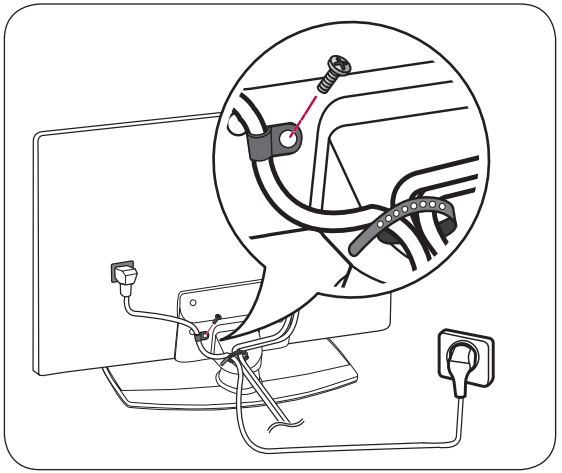

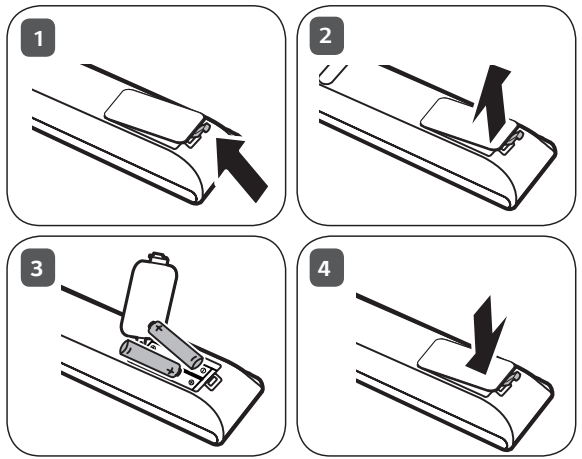
1
2
3
4

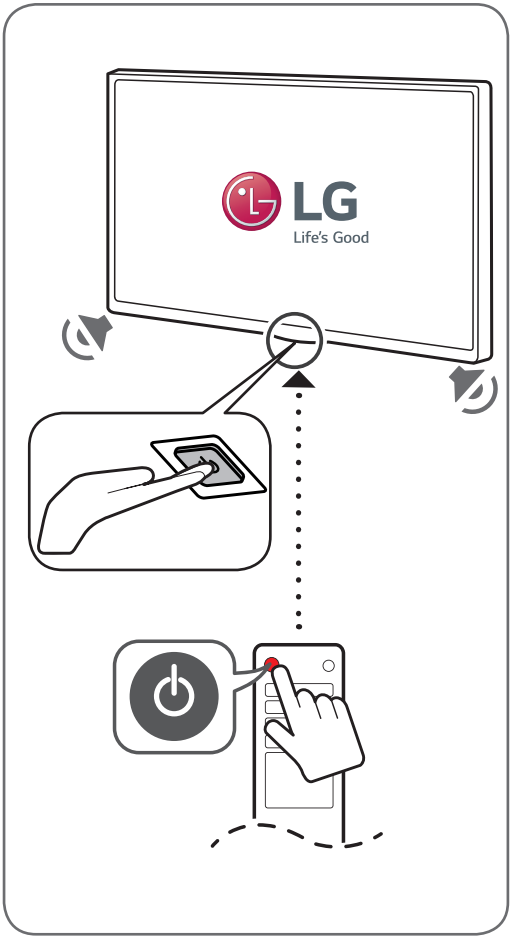
LG
Life's Good

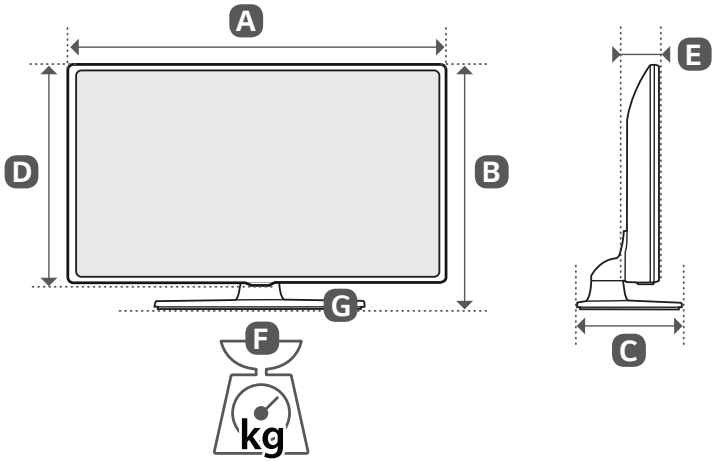

	A (mm)	B (mm)	C (mm)	D (mm)	E (mm)	F (kg)	F - G (kg)
32LV541H-TA	739	495	241	441	84	6.05	4.85
43LV541H-TA	974	625	303	571	79.4	12.45	9.2
49LV541H-TA	1107	702	303	645	79.4	14.55	11.3
55LV541H-TA	1241	770	303	720	63.0	19.5	16.3
Power requirement / Persyaratan daya / متطلبات الطاقة					AC 100-240 V ~ 50 / 60 Hz تيار متردد 100 - 240 فولت ~ 50 / 60 هرتز		

MFL71699213
(2001-REV00)

OWNER'S MANUAL

Safety and Reference

LED TV*

* Disclaimer
  LG LED TV applies LCD screen with LED backlights.

Please read this manual carefully before operating your set and retain it for future reference.

MFL71699103

(2001-REV00)

www.lg.com

Copyright © 2020 LG Electronics Inc. All Rights Reserved.

Warning! Safety instructions

ENGLISH

CAUTION

RISK OF ELECTRIC SHOCK
DO NOT OPEN

CAUTION : TO REDUCE THE RISK OF ELECTRIC SHOCK, DO NOT REMOVE COVER (OR BACK). NO USER-SERVICEABLE PARTS INSIDE. REFER TO QUALIFIED SERVICE PERSONNEL.

This symbol is intended to alert the user to the presence of uninsulated "dangerous voltage" within the product's enclosure that may be of sufficient magnitude to constitute a risk of electric shock to persons.

This symbol is intended to alert the user to the presence of important operating and maintenance (servicing) instructions in the literature accompanying the appliance.

WARNING : TO REDUCE THE RISK OF FIRE AND ELECTRIC SHOCK, DO NOT EXPOSE THIS PRODUCT TO RAIN OR MOISTURE.

- Do not place the TV and/or remote control in the following environments:
  - A location exposed to direct sunlight
  - An area with high humidity such as a bathroom
  - Near any heat source such as stoves and other devices that produce heat
  - Near kitchen counters or humidifiers where they can easily be exposed to steam or oil
  - An area exposed to rain or wind
  - Near containers of water such as vases

  Otherwise, this may result in fire, electric shock, malfunction or product deformation.
- Do not place the product where it might be exposed to dust. This may cause a fire hazard.
- Mains Plug is the TV connecting/disconnecting device to AC mains electric supply. This plug must remain readily attached and operable when TV is in use.
- Do not touch the power plug with wet hands. Additionally, if the cord pin is wet or covered with dust, dry the power plug completely or wipe dust off. You may be electrocuted due to excess moisture.
- Make sure to connect Mains cable to compliant AC mains socket with Grounded earth pin. (Except for devices which are not grounded on earth.) Otherwise possibility you may be electrocuted or injured.
- Insert power cable plug completely into wall socket otherwise if not secured completely into socket, fire ignition may break out.
- Ensure the power cord does not come into contact with hot objects such as a heater. This may cause a fire or an electric shock hazard.
- Do not place a heavy object, or the product itself, on power cables. Otherwise, this may result in fire or electric shock.
- Bend antenna cable between inside and outside building to prevent rain from flowing in. This may cause water damaged inside the Product and could give an electric shock.
- When mounting TV onto wall make sure to neatly install and isolate cabling from rear of TV as to not create possibility of electric shock /fire hazard.
- Do not plug too many electrical devices into a single multiple electrical outlet. Otherwise, this may result in fire due to over-heating.
- Do not drop the product or let it fall over when connecting external devices. Otherwise, this may result in injury or damage to the product.
- Keep the anti-moisture packing material or vinyl packing out of the reach of children. Anti-moisture material is harmful if swallowed. If swallowed by mistake, force the patient to vomit and visit the nearest hospital. Additionally, vinyl packing can cause suffocation. Keep it out of the reach of children.
- Do not let your children climb or cling onto the TV. Otherwise, the TV may fall over, which may cause serious injury.
- Dispose of used batteries carefully to ensure that a small child does not consume them. Please seek Doctor- Medical Attention immediately if child consumes batteries.
- Do not insert any metal objects/conductors (like a metal chopstick/cutlery/screwdriver) into the end of power cable while the power plug is plugged into wall socket. Additionally, do not touch the power plug right after unplugging from the wall socket. You may be electrocuted.
- Do not put or store inflammable substances near the product. There is a danger of combustion/explosion or fire due to careless handling of the inflammable substances.
- Do not drop metallic objects such as coins, hair pins, chopsticks or wire into the product, or inflammable objects such as paper and matches. Children must pay particular attention. Electrical shock, fire or injury can occur. If a foreign object is dropped into the product, unplug the power cord and contact the service centre.
- Do not spray water on the product or scrub with an inflammable substance (thinner or benzene). Fire or electric shock accident can occur.
- Do not allow any impact, shock or any objects to fall into the unit, and do not drop anything onto the screen. You may be injured or the product can be damaged.

- Never touch this product or antenna during a thunder or lighting storm.
  You may be electrocuted.
- Never touch the wall outlet when there is leakage of gas, open the windows and ventilate. It may cause a fire or a burn by a spark.
- Do not disassemble, repair or modify the product at your own discretion. Fire or electric shock accident can occur.
  Contact the service centre for check, calibration or repair.
- If any of the following occur, unplug the product immediately and contact your local service centre.
  - The product has been damaged
  - Foreign objects have entered the product
  - The product produced smoke or a strange smell

  This may result in fire or electric shock.
- Unplug the TV from AC mains wall socket if you do not intend to use the TV for a long period of time. Accumulated dust can cause fire hazard and insulation deterioration can cause electric leakage/ shock/fire.
- Apparatus shall not be exposed to dripping or splashing and no objects filled with liquids, such as vases, shall be placed on the apparatus.
- Do not install this product on a wall if it could be exposed to oil or oil mist. This may damage the product and cause it to fall.
- If water enters or comes into contact with TV, AC adapter or power cord please disconnect the power cord and contact service centre immediately. Otherwise, this may result in electric shock or fire.
- Only use an authorized AC adapter and power cord approved by LG Electronics. Otherwise, this may result in fire, electric shock, malfunction or product deformation.
- Never Disassemble the AC adapter or power cord. This may result in fire or electric shock.
- Be careful in handling the adapter to prevent any external shocks to it. An external shock may cause damage to the adapter.
- Make sure the power cord is connected securely to the power plug on the TV.
- Install the product where no radio wave occurs.
- There should be enough distance between an outside antenna and power lines to keep the former from touching the latter even when the antenna falls. This may cause an electric shock.
- Do not install the product on places such as unstable shelves or inclined surfaces. Also avoid places where there is vibration or where the product cannot be fully supported. Otherwise, the product may fall or flip over, which may cause injury or damage to the product.
- If you install the TV on a stand, you need to take actions to prevent the product from overturning. Otherwise, the product may fall over, which may cause injury.
- If you intend to mount the product to a wall, attach VESA standard mounting interface (optional parts) to the back of the product. When you install the set to use the wall mounting bracket (optional parts), fix it carefully so as not to drop.
- Only use the attachments / accessories specified by the manufacturer.
- When installing the antenna, consult with a qualified service technician. If not installed by a qualified technician, this may create a fire hazard or an electric shock hazard.
- We recommend that you maintain a distance of at least 2 to 7 times the diagonal screen size when watching TV. If you watch TV for a long period of time, this may cause blurred vision.
- Only use the specified type of battery. This could cause damage to the remote control.
- Do not mix new batteries with old batteries. This may cause the batteries to overheat and leak.
- Batteries should not be exposed to excessive heat. For example, keep away from direct Sunlight, open fireplace and electric heaters.
- Signal from Remote Control can be interrupted due to external/ internal lighting eg Sunlight, fluorescent lighting. If this occurs turn off lighting or darken viewing area.
- When connecting external devices such as video game consoles, make sure the connecting cables are long enough. Otherwise, the product may fall over, which may cause injury or damage the product.
- Do not turn the product On/Off by plugging-in or unplugging the power plug to the wall outlet. (Do not use the power plug for switch.) It may cause mechanical failure or could give an electric shock.
- Please follow the installation instructions below to prevent the product from overheating.
  - The distance between the product and the wall should be more than 10 cm.
  - Do not install the product in a place with no ventilation (e.g., on a bookshelf or in a cupboard).
  - Do not install the product on a carpet or cushion.
  - Make sure the air vent is not blocked by a tablecloth or curtain.

  This may result in fire.
- Take care not to touch the ventilation openings when watching the TV for long periods as the ventilation openings may become hot. This does not affect the operation or performance of the product.
- Periodically examine the cord of your appliance, and if its appearance indicates damage or deterioration, unplug it, discontinue use of the appliance, and have the cord replaced with an exact replacement part by an authorized servicer.

- Prevent dust collecting on the power plug pins or outlet. This may cause a fire hazard.
- Protect the power cord from physical or mechanical abuse, such as being twisted, kinked, pinched, closed in a door, or walked upon. Pay particular attention to plugs, wall outlets, and the point where the cord exits the appliance.
- Do not press strongly upon the panel with a hand or sharp object such as nail, pencil or pen, or make a scratch on it, as it may cause damage to screen.
- Avoid touching the screen or holding your finger(s) against it for long periods of time. Doing so may produce some temporary or permanent distortion/damage to screen.
- As long as this unit is connected to the AC wall outlet, it is not disconnected from the AC power source even if you turn off this unit by SWITCH.
- When unplugging the cable, grab the plug and unplug it, by pulling at the plug. Don't pull at the cord to unplug the power cord from the power board, as this could be hazardous.
- When moving the product, make sure you turn the power off first. Then, unplug the power cables, antenna cables and all connecting cables.
  The TV set or power cord may be damaged, which may create a fire hazard or cause electric shock.
- When moving or unpacking the product, work in pairs because the product is heavy. Otherwise, this may result in injury.
- Refer all servicing to qualified service personnel. Servicing is required when the apparatus has been damaged in any way, such as power supply cord or plug is damaged, liquid has been spilled or objects have fallen into the apparatus, the apparatus has been exposed to rain or moisture, does not operate normally, or has been dropped.
- Do not use high voltage electrical goods near the TV (e.g. electric mosquito-swatter). This may result in product malfunction.
- When cleaning the product and its components, unplug the power first and wipe it with a soft cloth. Applying excessive force may cause scratches or discolouration. Do not spray with water or wipe with a wet cloth. Do not clean your TV with chemicals including glass cleaner, any type of air freshener, insecticide, lubricants, wax (car, industrial), abrasive, thinner, benzene, alcohol etc., which can damage the product and/ or its panel. Otherwise, this may result in fire, electric shock or product damage (Deformation, corrosion or breakage).

Preparing

- Image shown may differ from your TV.
- Your TV's OSD (On Screen Display) may differ slightly from that shown in this manual.
- The available menus and options may differ from the input source or product model that you are using.
- New features may be added to this TV in the future.
- The items supplied with your product may vary depending on the model.
- Product specifications or contents of this manual may be changed without prior notice due to upgrade of product functions.
- For an optimal connection, HDMI cables and USB devices should have bezels less than 10 mm thick and 18 mm width. Use an extension cable that supports USB 2.0 if the USB cable or USB memory stick does not fit into your TV's USB port.

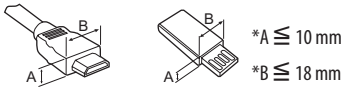

- Use a certified cable with the HDMI logo attached.
- If you do not use a certified HDMI cable, the screen may not display or a connection error may occur. (Recommended HDMI Cable Types)
  - High-Speed HDMI®/™ cable (3 m or less)
  - High-Speed HDMI®/™ cable with Ethernet (3 m or less)

- Do not use any unapproved items to ensure the safety and product life span.
- Any damage or injuries caused by using unapproved items are not covered by the manufacturer's warranty.
- When attaching the stand to the TV set, place the screen facing down on a cushioned table or flat surface to protect the screen from scratches.
- Make sure that the screws are fastened completely. (If they are not fastened securely enough, the TV may tilt forward after being installed.) Do not use too much force and over tighten the screws; otherwise screw may be damaged and not tighten correctly.

Separate purchase

Separate purchase items can be changed or modified for quality improvement without any notification. Contact your dealer to buy these items. These devices only work with certain models. The model name or design may be changed depending on the upgrade of product functions, manufacturer's circumstances or policies.

(Depending on model)

LED Clock
LEC-005

Lifting and moving the TV

Please note the following advice to prevent the TV from being scratched or damaged and for safe transportation regardless of its type and size.

- It is recommended to move the TV in the box or packing material that the TV originally came in.
- Before moving or lifting the TV, disconnect the power cord and all cables.
- When holding the TV, the screen should face away from you to avoid damage.

- Hold the top and bottom of the TV frame firmly. Make sure not to hold the transparent part, speaker, or speaker grill area.

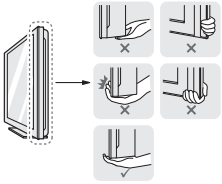

- When transporting a large TV, there should be at least 2 people.
- When transporting the TV by hand, hold the TV as shown in the following illustration.

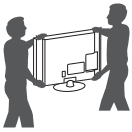

- When transporting the TV, do not expose the TV to jolts or excessive vibration.
- When transporting the TV, keep the TV upright, never turn the TV on its side or tilt towards the left or right.
- Do not apply excessive pressure to cause flexing / bending of frame chassis as it may damage screen.
- When handling the TV, be careful not to damage the protruding buttons.

- Avoid touching the screen at all times, as this may result in damage to the screen.
- Do not move the TV by holding the cable holders, as the cable holders may break, and injuries and damage to the TV may occur.

Using the button

(Depending on model)

You can simply operate the TV functions, using the button.

<A type>

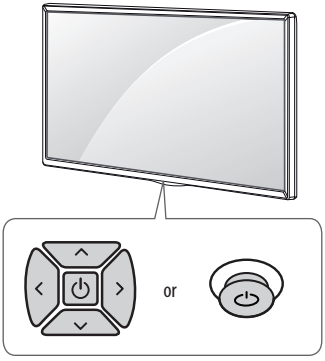

<B type>

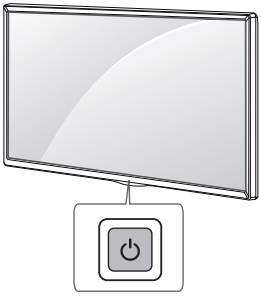

Basic functions

<A type>

		Power On (Press) Power Off [1] (Press and hold)
		Volume Control
		Programmes Control

<B type>

	Power On (Press) Power Off (Press and Hold) Menu Control (Press [2]) Menu Selection (Press and Hold [3])

1 If the Menu button is on the screen, pressing and holding the button will let you exit the Menu.

2 You can access and adjust the menu by pressing the button when TV is on.

3 You can use the function when you access menu control.

Adjusting the menu

(Depending on model)

When the TV is turned on, press the ⏻ button one time. You can adjust the Menu items using the button.

⏻	Turns the power off.
⚙	Accesses the settings menu.
✕	Clears on-screen displays and returns to TV viewing.
	Changes the input source.
∧∨	Scrolls through the saved programmes.
+ −	Adjusts the volume level.

Mounting on a table

1 Lift and tilt the TV into its upright position on a table.
- Leave a 10 cm (minimum) space from the wall for proper ventilation.

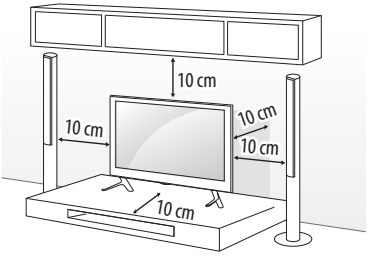

2 Connect the power cord to a wall outlet.

- Do not place the TV near or on sources of heat, as this may result in fire or other damage.
- Do not apply foreign substances (oils, lubricants, etc.) to the screw parts when assembling the product. (Doing so may damage the product.)
- If a television is not positioned in a sufficiently stable location, it can be potentially hazardous due to falling. Many injuries, particularly to children, can be avoided by taking simple precautions such as:
  - » Using cabinets or stands recommended by the manufacturer of the television.
  - » Only using furniture that can safely support the television.
  - » Ensuring the television is not overhanging the edge of the supporting furniture.
  - » Not placing the television on tall furniture (for example, cupboards or bookcases) without anchoring both the furniture and the television to a suitable support.
  - » Not standing the televisions on cloth or other materials placed between the television and supporting furniture.
  - » Educating children about the dangers of climbing on furniture to reach the television or its controls.

Attaching the TV to a desk

(This feature is not available for all models.)

The TV should be attached to a desk so it cannot be pulled in a forward/backward direction, potentially causing injury or damaging the product.

A type)

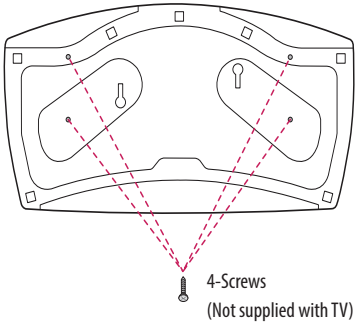

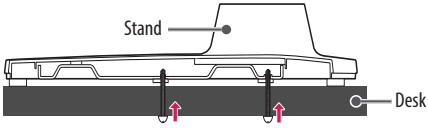

- Screw : M5 x L (*L: Table depth + 8~10 mm)
  ex) Table depth: 15 mm, Screw : M5 x L25

B type)

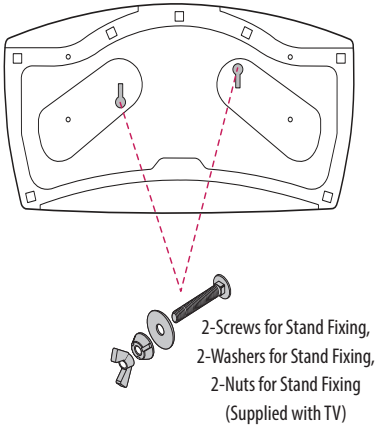

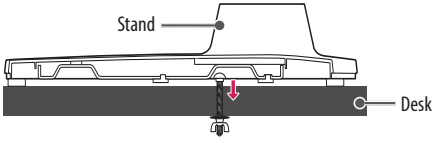

Using the kensington security system

(This feature is not available for all models.)

- Image shown may differ from your TV.

The Kensington security system connector is located at the rear of the TV. For more information of installation and using, refer to the manual provided with the Kensington security system or visit *http://www.kensington.com*. Connect the Kensington security system cable between the TV and a table.

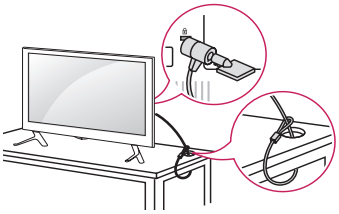

Securing the TV to a wall

(This feature is not available for all models.)

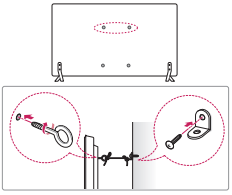

1 Insert and tighten the eye-bolts, or TV brackets and bolts on the back of the TV.
   - If there are bolts inserted at the eye-bolts position, remove the bolts first.
2 Mount the wall brackets with the bolts to the wall.
   Match the location of the wall bracket and the eye-bolts on the rear of the TV.
3 Connect the eye-bolts and wall brackets tightly with a sturdy rope.
   Make sure to keep the rope horizontal with the flat surface.

- Make sure that children do not climb on or hang on the TV.

- Use a platform or cabinet that is strong and large enough to support the TV securely.
- Brackets, bolts and ropes are not provided. You can obtain additional accessories from your local dealer.

Adjusting the angle of the TV to suit view

(This feature is not available for all models.)

Swivel 20 degrees to the left or right and adjust the angle of the TV to suit your view.

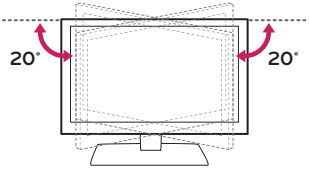

- When adjusting the angle of the product, watch out for your fingers.
  - Personal injury may occur if hands or fingers are pinched. If the product is tilted too much, it may fall, causing damage or injury.

Mounting on a wall

Attach an optional wall mount bracket at the rear of the TV carefully and install the wall mount bracket on a solid wall perpendicular to the floor. When you attach the TV to other building materials, please contact qualified personnel. LG recommends that wall mounting be performed by a qualified professional installer. We recommend the use of LG's wall mount bracket. LG's wall mount bracket is easy to move with cables connected. When you do not use LG's wall mount bracket, please use a wall mount bracket where the device is adequately secured to the wall with enough space to allow connectivity to external devices. It is advised to connect all the cables before installing fixed wall mounts.

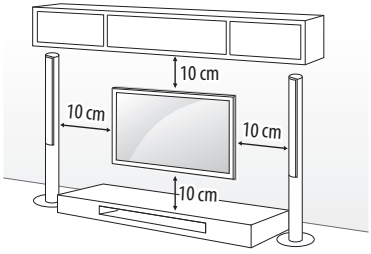

Make sure to use screws and wall mount bracket that meet the VESA standard. Standard dimensions for the wall mount kits are described in the following table.

Separate purchase(Wall Mounting Bracket)

Model	32/43LV34** 32/43LV54**	49LV30** 49/55LV34** 49/55LV54**
VESA (A x B) (mm)	200 x 200	300 x 300
Standard screw	M6	M6
Number of screws	4	4
Wall mount bracket	LSW240B MSW240	LSW350B MSW240

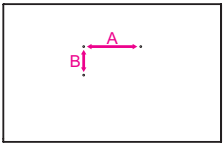

- Remove the stand before installing the TV on a wall mount by performing the stand attachment in reverse.

- When installing the wall mounting bracket, it is recommended to cover the stand hole using tape, in order to prevent the influx of dust and insects. (Depending on model)

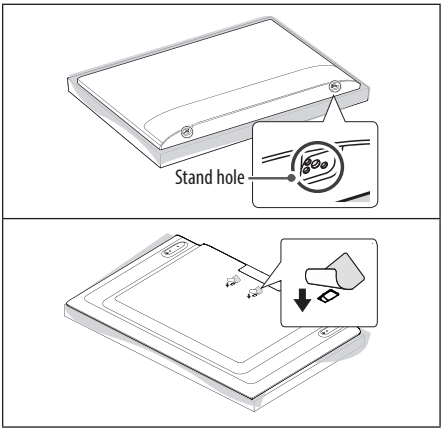

Connections (notifications)

Connect various external devices to the TV and switch input modes to select an external device. For more information of external device's connection, refer to the manual provided with each device.

Available external devices are: HD receivers, DVD players, VCRs, audio systems, USB storage devices, PC, gaming devices, and other external devices.

- The external device connection may differ from the model.
- Connect external devices to the TV regardless of the order of the TV port.
- If you record a TV program on a DVD recorder or VCR, make sure to connect the TV signal input cable to the TV through a DVD recorder or VCR. For more information of recording, refer to the manual provided with the connected device.
- Refer to the external equipment's manual for operating instructions.
- If you connect a gaming device to the TV, use the cable supplied with the gaming device.
- In PC mode, there may be noise associated with the resolution, vertical pattern, contrast or brightness. If noise is present, change the PC output to another resolution, change the refresh rate to another rate or adjust the brightness and contrast on the PICTURE menu until the picture is clear.
- In PC mode, some resolution settings may not work properly depending on the graphics card.
- When connecting via a wired LAN, it is recommended to use a CAT 7 cable.

Antenna connection

Connect the TV to a wall antenna socket with an RF cable (75 Ω).

- Use a signal splitter to use more than 2 TVs.
- If the image quality is poor, install a signal amplifier properly to improve the image quality.
- If the image quality is poor with an antenna connected, try to realign the antenna in the correct direction.
- An antenna cable and converter are not supplied.
- Supported DTV Audio: MPEG, Dolby Digital, Dolby Digital Plus, HE-AAC

CI module connection

(Depending on model)

View the encrypted (pay) services in digital TV mode.

- Check if the CI module is inserted into the PCMCIA card slot in the right direction. If the module is not inserted properly, this can cause damage to the TV and the PCMCIA card slot.
- If the TV does not display any video and audio when CI+ CAM is connected, please contact to the Terrestrial/Cable Operator.
- CI may not work as expected depending on the country settings of your TV.

Speaker Output Setup

(Depending on model)

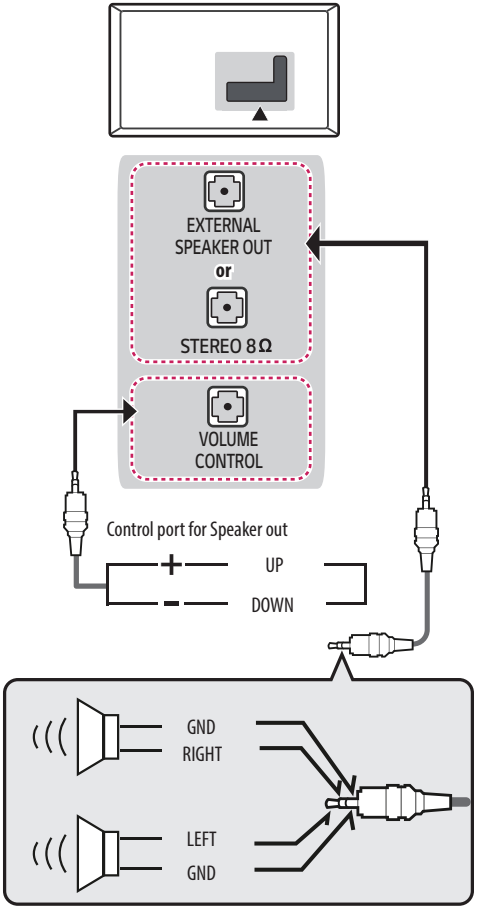

- Use only with the 3 Pole 3.5 mm Stereo Jack.
- Do not connect your headphones or earphones to the port for connecting an external speaker.

Method of Volume control port

(Depending on model)

- Cable Spec.

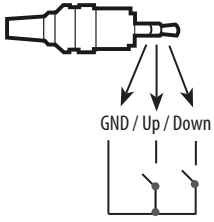	Each Up / Down pin is pulled to 3.3 V with CPU GPIO.
	CPU detects transition from 3.3 V to GND level for volume control.

Network setup

Wired network connection

(Depending on model)

This TV can be connected to a Pro:Centric server via the **LAN** port. After making the physical connection, the TV needs to be set up for network communication. Connect the **LAN** port of the Modem or Router from Pro:Centric server to the **LAN** port on the TV.

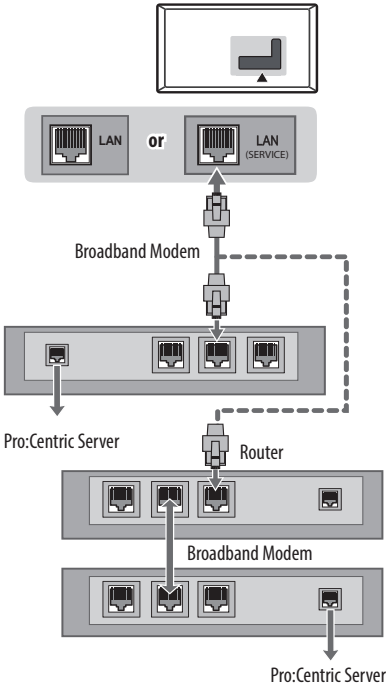

- Do not connect a modular phone cable to the **LAN** port.
- Since there are various connection methods, please follow the specifications of your telecommunication carrier or internet service provider.

Other connections

Connect your TV to external devices. For the best picture and audio quality, connect the external device and the TV with the HDMI cable. Some separate cable is not provided.

Remote control

The descriptions in this manual are based on the buttons on the remote control. Please read this manual carefully and use the TV correctly.

To replace batteries, open the battery cover, replace batteries (1.5 V AAA) matching the ⊕ and ⊖ ends to the label inside the compartment, and close the battery cover. To remove the batteries, perform the installation actions in reverse.

- In Analogue TV and some countries, some remote control buttons may not work.

Make sure to point the remote control toward the remote control sensor on the TV.

(Depending on model)

(POWER) Turns the TV on or off.
TV/RAD Selects Radio, TV and DTV programme.
SUBTITLE Recalls your preferred subtitle in digital mode.
AD Audio descriptions function will be enabled.
RATIO Resizes an image.
(INPUT) Changes the input source.
Number buttons Enters numbers.
LIST Accesses the saved programme list.
Q.VIEW Returns to the previously viewed programme.
+ ◿ − Adjusts the volume level.
FAV Accesses your favourite programme list.
GUIDE Shows programme guide.
(MUTE) Mutes all sounds.
∧ P ∨ Scrolls through the saved programmes.
∧ PAGE ∨ Moves to the previous or next screen.
Teletext buttons (TEXT, T.OPT) These buttons are used for teletext.
(HOME) Accesses the Home menu.
(Settings) Accesses the Settings menu.
Q.MENU Accesses the Quick menus.
Navigation buttons (up/down/left/right) Scrolls through menus or options.
OK Selects menus or options and confirms your input.
BACK Returns to the previous level.
EXIT Clears on-screen displays and returns to TV viewing.
INFO Views the information of the current programme and screen.
●REC/✳ Starts to record and displays record menu. (Only Time Machine[Ready] supported model) (Depending on model)
Control buttons (■, ▶, ❚❚, ◀◀, ▶▶) Controls media contents.
These access special functions in some menus.

ENGLISH

(Depending on model)

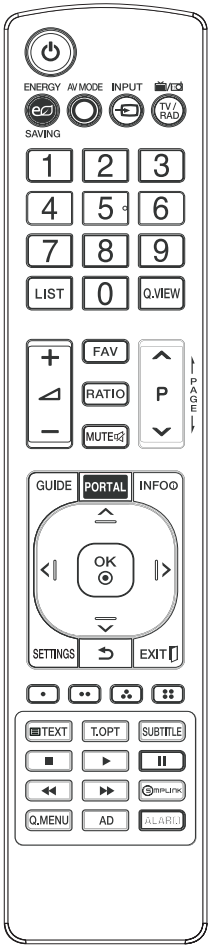

(POWER) Turns the TV on or off.

ENERGY SAVING Adjusts the brightness of the screen to reduce energy consumption.

AV MODE Selects an AV mode.

INPUT Changes the input source.

TV/RAD Selects Radio, TV and DTV programme.

Number buttons Enters numbers.

LIST Accesses the saved programme list.

Q.VIEW Returns to the previously viewed programme.

+ − Adjusts the volume level.

FAV Accesses your favourite programme list.

RATIO Resizes an image.

MUTE Mutes all sounds.

P Scrolls through the saved programmes.

PAGE Moves to the previous or next screen.

GUIDE Shows programme guide.

PORTAL Displays and removes hotel interactive menu.

INFO Views the information of the current programme and screen.

Navigation buttons (up/down/left/right) Scrolls through menus or options.

OK Selects menus or options and confirms your input.

SETTINGS Accesses the main menus.

(BACK) Returns to the previous level.

EXIT Clears on-screen displays and returns to TV viewing.

These access special functions in some menus.

Teletext buttons (TEXT, T.OPT) These buttons are used for teletext.

SUBTITLE Recalls your preferred subtitle in digital mode.

Control buttons (■, ▶, ❚❚, ◀◀, ▶▶) Controls media contents.

SIMPLINK Accesses the AV devices connected with the HDMI cable through HDMI-CEC. Opens the SIMPLINK menu.

Q.MENU Accesses the Quick menus.

AD Audio descriptions function will be enabled.

ALARM Sets the alarm function.

Licenses

Supported licenses may differ by model. For more information about licenses, visit *www.lg.com*.

DOLBY AUDIO™

Manufactured under license from Dolby Laboratories. Dolby, Dolby Vision, Dolby Audio, and the double-D symbol are trademarks of Dolby Laboratories.

HDMI™
HIGH-DEFINITION MULTIMEDIA INTERFACE

The terms HDMI and HDMI High-Definition Multimedia interface, and the HDMI logo are trademarks or registered trademarks of HDMI Licensing LLC in the United States and other countries.

DIVX HD

This DivX Certified® device has passed rigorous testing to ensure it plays DivX® video.

To play purchased DivX movies, first register your device at vod.divx.com. Find your registration code in the DivX VOD section of your device setup menu.

DivX Certified® to play DivX® video up to HD 1080p, including premium content.

DivX®, DivX Certified® and associated logos are trademarks of DivX, LLC and are used under license.

Covered by DivX Patents 7,295,673; 7,515,710; RE45,052; and others available at [*www.divx.com/patents*].

(Depending on model)

CRESTRON connected

HEVC Advance™
Covered by Patents at patentlist.hevcadvance.com

Open Source Software Notice Information

To obtain the source code under GPL, LGPL, MPL, and other open source licenses, that is contained in this product, please visit *http://opensource.lge.com*. In addition to the source code, all referred license terms, warranty disclaimers and copyright notices are available for download. LG Electronics will also provide open source code to you on CD-ROM for a charge covering the cost of performing such distribution (such as the cost of media, shipping, and handling) upon email request to *opensource@lge.com*. This offer is valid for a period of three years after our last shipment of this product. This offer is valid to anyone in receipt of this information.

Troubleshooting

The software version can be updated for improvement in performance. Customer needs to ensure the compatibility of customer's equipment with LGE software. If needed, please consult with LGE and upload revised software version according to the guidance provided by LGE.

Cannot control the TV with the remote control.

- Check the remote control sensor on the product and try again.
- Check if there is any obstacle between the product and the remote control.Y
- Check if the batteries are still working and properly installed (⊕ to ⊕, ⊖ to ⊖).

No image display and no sound is produced.

- Check if the product is turned on.
- Check if the power cord is connected to a wall outlet.
- Check if there is a problem in the wall outlet by connecting other products.

The TV turns off suddenly.

- Check the power control settings. The power supply may be interrupted.
- Check if the **Auto Power Off** / **Sleep Timer** / **Timer Power Off** is activated in the **Timers** settings.
- If there is no signal while the TV is on, the TV will turn off automatically after 15 minutes of inactivity.

When connecting to the PC (RGB/HDMI/DVI), '**No Signal**' or '**Invalid Format**' is displayed.

- Turn the TV off/on using the remote control.
- Reconnect the RGB/HDMI cable.
- Restart the PC with the TV on.

Abnormal Display

- If the product feels cold to the touch, there may be a small "flicker" when it is turned on. This is normal, there is nothing wrong with product.
- This panel is an advanced product that contains millions of pixels. You may see tiny black dots and/or brightly coloured dots (red, blue or green) at a size of 1 ppm on the panel. This does not indicate a malfunction and does not affect the performance and reliability of the product.
  This phenomenon also occurs in third-party products and is not subject to exchange or refund.
- You may find different brightness and color of the panel depending on your viewing position(left/right/top/down).
  This phenomenon occurs due to the characteristic of the panel. It is not related with the product performance, and it is not malfunction.
- Displaying a still image for a prolonged period of time may cause image sticking. Avoid displaying a fixed image on the TV screen for a long period of time.

Generated Sound

- "Cracking" noise: A cracking noise that occurs when watching or turning off the TV is generated by plastic thermal contraction due to temperature and humidity. This noise is common for products where thermal deformation is required.
- Electrical circuit humming/panel buzzing: A low level noise is generated from a high-speed switching circuit, which supplies a large amount of current to operate a product. It varies depending on the product.
  This generated sound does not affect the performance and reliability of the product.

Specifications

CI Module (W x H x D)		100.0 mm x 55.0 mm x 5.0 mm
Environment condition	**Operating Temperature**	0 ℃ to 40 ℃
	Operating Humidity	Less than 80 %
	Storage Temperature	-20 ℃ to 60 ℃
	Storage Humidity	Less than 85 %

	Digital TV (Depending on Country & model)	**Analogue TV** (Depending on Country)
Television system	DVB-C, DVB-T/T2	PAL B/B, PAL B/G, PAL D/K, PAL-I, SECAM B/G, SECAM D/K, NTSC-M
Programme coverage	VHF, UHF	VHF, UHF, CATV
Maximum number of storable programmes	2,000	
External antenna impedance	75 Ω	

HDMI/DVI-DTV supported mode

Resolution	Horizontal Frequency (kHz)	Vertical Frequency (Hz)
640 x 480	31.46 31.50	59.94 60.00
720 x 480	31.469 31.50	59.94 60.00
720 x 576	31.250	50.00
1280 x 720	37.50 45.00 44.96	50.00 60.00 59.94
1920 x 1080	28.125 33.75 33.72 56.250 67.50 67.432 27.00 26.973 33.75 33.716	50.00 60.00 59.94 50.00 60.00 59.94 24.00 23.976 30.00 29.976

RGB-PC supported mode

(Only LV34**)

Resolution	Horizontal Frequency (kHz)	Vertical Frequency (Hz)
640 x 350	31.468	70.09
720 x 400	31.469	70.08
640 x 480	31.469	59.94
800 x 600	37.879	60.31
1024 x 768	48.363	60.00
1152 x 864	54.348	60.053
1360 x 768	47.712	60.015
1280 x 1024[1] (FHD only)	63.981	60.020
1920 x 1080[1] (FHD only)	66.587 67.50	59.934 60.00

1 Except for 32LV34**

HDMI/DVI-PC supported mode

(Use HDMI IN 1 for PC mode)

Resolution	Horizontal Frequency (kHz)	Vertical Frequency (Hz)
640 x 350	31.468	70.09
720 x 400	31.469	70.08
640 x 480	31.469	59.94
800 x 600	37.879	60.31
1024 x 768	48.363	60.00
1152 x 864	54.348	60.053
1360 x 768	47.712	60.015
1280 x 1024[1] (FHD only)	63.981	60.020
1920 x 1080[1] (FHD only)	67.50	60.00

1 Except for 32LV34**, 32LV54**

Component port connecting information

Component ports on the TV	Y	P_B	P_R

Video output ports on DVD player	Y	P_B	P_R
	Y	B-Y	R-Y
	Y	Cb	Cr
	Y	Pb	Pr

Signal	Component
480i / 576i	O
480p / 576p	O
720p / 1080i	O
1080p	O (Only 50 Hz / 60 Hz)

Supported video formats

- Maximum: 1920 x 1080 @ 30p (only Motion JPEG 640 x 480 @ 30p)
- .asf, .wmv
  [Video] MPEG-4 Part2, XViD, H.264/AVC, VC1(WMV3, WVC1), MP43
  [Audio] WMA Standard, WMA9(Pro), MP3, AAC, AC3
- .divx, .avi
  [Video] MPEG-2, MPEG-4 Part2, DivX3.11, DivX4, DivX5, DivX6, XViD, H.264/AVC
  [Audio] HE-AAC, LPCM, ADPCM, MPEG- 1 Layer I, MPEG-1 Layer II, Dolby Digital, MPEG-1 Layer III (MP3)
- .ts, .trp, .tp, .mts, .m2ts
  [Video] H.264/AVC, MPEG-2, H.265/HEVC
  [Audio] MPEG-1 Layer I, MPEG-1 Layer II, MPEG-1 Layer III (MP3), Dolby Digital, Dolby Digital Plus, AAC, HE-AAC
- .vob
  [Video] MPEG-1, MPEG-2
  [Audio] Dolby Digital, MPEG-1 Layer I, MPEG- 1 Layer II, DVD-LPCM
- .mp4, .m4v, .mov
  [Video] MPEG-2, MPEG-4 Part2, DivX3.11, DivX4, DivX5, XVID, H.264/AVC
  [Audio] AAC, MPEG-1 Layer III (MP3)
- .mkv
  [Video] MPEG-2, MPEG-4 Part2, XVID, H.264/AVC
  [Audio] HE-AAC, Dolby Digital, MPEG-1 Layer III (MP3), LPCM
- motion JPEG
  [Video] MJPEG
  [Audio] LPCM, ADPCM
- .mpg, .mpeg, .mpe
  [Video] MPEG-1, MPEG-2
  [Audio] MPEG-1 Layer I, MPEG-1 Layer II, Dolby Digital, LPCM
- .dat
  [Video] MPEG-1, MPEG-2
  [Audio] MP2
- .flv
  [Video] Sorenson H.263, H.264/AVC
  [Audio] MP3, AAC, HE-AAC
- .3gp
  [Video] H.264/AVC, MPEG-4 Part2
  [Audio] AAC, AMR(NB/WB)
- *.rm, *.rmvb
  [Video] RV30, RV40
  [Audio] Dolby Digital, AAC, HE-AAC, RA6(Cook)
- *.rm / *.rmvb : Depending on model

Supported audio formats

- File type : mp3
  [Bit rate] 32 Kbps - 320 Kbps
  [Sample freq.] 16 kHz - 48 kHz
  [Support] MPEG1, MPEG2, Layer2, Layer3
- File Type : AAC
  [Bit rate] Free Format
  [Sample freq.] 8 kHz ~ 48 kHz
  [Support] ADIF, ADTS
- File Type : M4A
  [Bit rate] Free Format
  [Sample freq.] 8 kHz ~ 48 kHz
  [Support] MPEG-4
- File Type : WMA
  [Bit rate] 128 Kbps ~ 320 Kbps
  [Sample freq.] 8 kHz ~ 48 kHz
  [Support] WMA7, WMA8, WMA9 Standard
- File Type : WMA 10 Pro
  [Bit rate] ~ 768 Kbps
  [Sample freq.]
  M0 : Up to 2 / 48 kHz (Except LBR mode),
  M1 : Up to 5.1 / 48 kHz,
  M2 : Up to 5.1 /96 kHz
  [Support] WMA 10 Pro
- File Type : OGG
  [Bit rate] Free Format
  [Sample freq.] 8 kHz~ 48 kHz
  [Support] OGG Vorbis
- File Type : WAV
  [Bit rate] 64 Kbps ~ 1.5 Mbps
  [Sample freq.] 8 kHz ~ 48 kHz
  [Support] LPCM
  [Bit depth] 8 bit / 16 bit / 24 bit

Supported photo formats

- Category : 2D (jpeg, jpg, jpe)
  [Available file type]
  SOF0 : Baseline,
  SOF1 : Extend Sequential,
  SOF2 : Progressive
  [Photo size]
  Minimum : 64 x 64,
  Maximum (Normal Type) : 15360 (W) x 8640 (H),
  Maximum (Progressive Type) : 1920 (W) x 1440 (H)
- Category : BMP
  [Available file type] .bmp
  [Photo size] Minimum : 64 x 64, Maximum : 9600 x 6400
- Category : PNG
  [Available file type] Interlace, Non-Interlace
  [Photo size]
  Minimum : 64 x 64,
  Maximum (Interlace) : 1200 x 800,
  Maximum (Non-Interlace) : 9600 x 6400
- BMP and PNG format files may be slower to display than JPEG.
- Non-standard photo/image file may not be displayed.

IR CODES

- This feature is not available for all models.

Code (Hexa)	Function	Note
08	⏻ (POWER)	Remote control Button (Power On/Off)
F0	**TV/RAD**	Remote control Button
39	**SUBTITLE**	Remote control Button
91	**AD**	Remote control Button
79	**RATIO / RATIO**	Remote control Button
0B	(INPUT) / **INPUT**	Remote control Button
10-19	Number Key 0-9	Remote control Button
53	**LIST**	Remote control Button
1A	**Q.VIEW**	Remote control Button
02	+	Remote control Button
03	−	Remote control Button
1E	**FAV**	Remote control Button
AB	**GUIDE**	Remote control Button
09	(MUTE) / **MUTE**	Remote control Button
00	**P** ∧ / **PAGE** ∧ / **PAGE**	Remote control Button
01	**P** ∨ / **PAGE** ∨ / **PAGE**	Remote control Button
20	TEXT	Remote control Button
21	T.OPT	Remote control Button
43	(SETTINGS) / **SETTINGS**	Remote control Button
45	**Q.MENU**	Remote control Button
AA	**INFO / INFO**	Remote control Button
5B	**EXIT**	Remote control Button
28	**BACK** / (BACK)	Remote control Button
44	**OK / OK**	Remote control Button
40	▲ /	Remote control Button
41	▼ /	Remote control Button
07	◀ /	Remote control Button
06	▶ /	Remote control Button

Code (Hexa)	Function	Note
72		Remote control Button
71		Remote control Button
63		Remote control Button
61		Remote control Button
B1	■	Remote control Button
B0	▶	Remote control Button
BA	❚❚	Remote control Button
8E	▶▶	Remote control Button
8F	◀◀	Remote control Button
7C	(HOME) / **SMART**	Remote control Button
BD	● **REC/** ✳	Remote control Button
95	**ENERGY SAVING**	Remote control Button
30	○ **AV MODE**	Remote control Button
0C	**PORTAL**	Remote control Button
7E	**SIMPLINK**	Remote control Button
E8	**ALARM**	Remote control Button

EXTERNAL CONTROL DEVICE SETUP

RS-232C Setup

- Image shown may differ from your TV.

Connect the RS-232C (serial port) input jack to an external control device (such as a computer or an A/V control system) to control the product's functions externally.

Connect the serial port of the control device to the RS-232C jack on the product back panel.

- RS-232C connection cables are not supplied with the product.

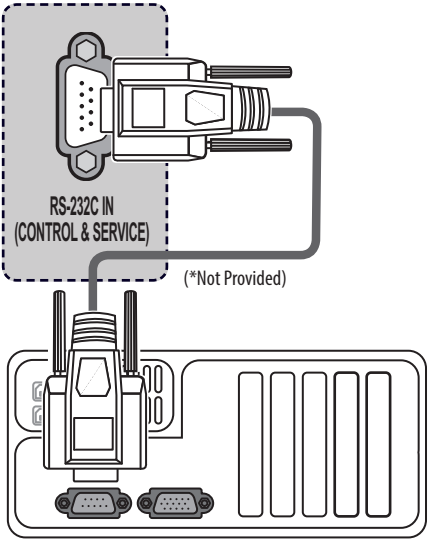

Type of Connector : D-Sub 9-Pin Male

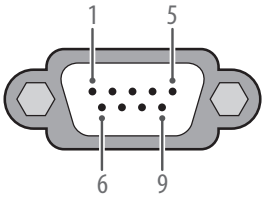

No.	Pin name
1	3.5 V
2	RXD (Receive data)
3	TXD (Transmit data)
4	IR OUT from TV
5	GND
6	No Connection
7	No Connection (5 V available in some models)
8	No Connection
9	No Connection (12 V available in some models)

RS-232C Configurations

7-Wire Configurations (Standard RS-232C cable)

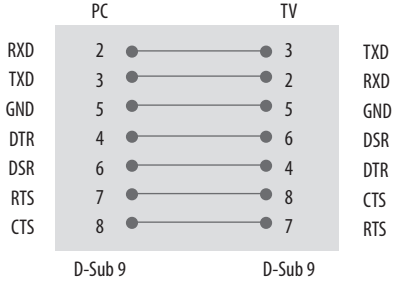

3-Wire Configurations (Not standard)

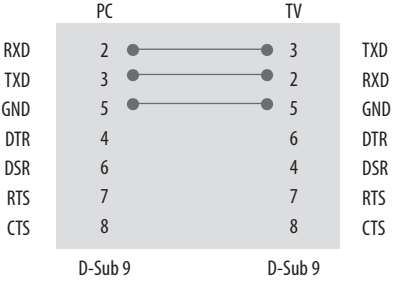

Communication Parameters

- Baud rate: 9600 bps (UART)
- Data length: 8 bits
- Parity : None
- Stop bit: 1 bit
- Communication code: ASCII code
- Use a crossed (reverse) cable.

Command Reference List

(Depending on model)

	COMMAND1	COMMAND2	DATA (Hexadecimal)
01. Power	k	a	00 to 01
02. Aspect Ratio	k	c	(See p. 22)
03. Screen Mute	k	d	(See p. 23)
04. Volume Mute	k	e	00 to 01
05. Volume Control	k	f	00 to 64
06. Contrast	k	g	00 to 64
07. Brightness	k	h	00 to 64
08. Colour	k	i	00 to 64
09. Tint	k	j	00 to 64
10. Sharpness	k	k	00 to 32
11. OSD Select	k	l	00 to 01
12. Remote Control Lock Mode	k	m	00 to 01
13. Balance	k	t	00 to 64
14. Colour Temperature	x	u	00 to 64
15. Energy Saving	j	q	(See p. 25)
16. Auto Configuration	j	u	01
17. Equalize	j	v	(See p. 25)
18. Tune Command	m	a	(See p. 25)
19. Programme Add/Skip	m	b	00 to 01
20. Key	m	c	(See p. 26)
21. Control Back Light	m	g	00 to 64
22. Input select (Main Picture Input)	x	b	(See p. 26)

- During USB operations such as DivX or EMF, all commands except Power(ka) and Key(mc) are not executed and treated as NG.

Transmission / Receiving Protocol

(Depending on Model)

Transmission

[Command1][Command2][ ][Set ID][ ][Data][Cr]

[Command 1] : First command to control the TV. (j, k, m or x)

[Command 2] : Second command to control the TV.

[Set ID] : You can adjust the set ID to choose desired monitor ID number in option menu. Adjustment range is 1 to 99. When selecting Set ID '0', every connected set is controlled. Set ID is indicated as decimal (1 to 99) on menu and as Hexa decimal (0 x 0 to 0 x 63) on transmission/ receiving protocol.

[Data] : To transmit command data. Transmit 'FF' data to read status of command.

[Cr] : Carriage Return
ASCII code '0 x 0D'

[ ] : ASCII code 'space (0 x 20)'

OK Acknowledgement

[Command2][ ][Set ID][ ][OK][Data][x]

* The set transmits ACK (acknowledgement) based on this format when receiving normal data. At this time, if the data is data read mode, it indicates present status data. If the data is data write mode, it returns the data of the PC computer.

Error Acknowledgement

[Command2][ ][Set ID][ ][NG][Data][x]

* The set transmits ACK (acknowledgement) based on this format when receiving abnormal data from non-viable functions or communication errors.

Data 00 : Illegal Code

01. Power (Command: k a)

► To control Power On/Off of the set.

Transmission
[k][a][ ][Set ID][ ][Data][Cr]

Data 00 : Power Off 01 : Power On

Ack
[a][ ][Set ID][ ][OK/NG][Data][x]

► To Show TV is Power On/Off.

Transmission
[k][a][ ][Set ID][ ][FF][Cr]

Ack
[a][ ][Set ID][ ][OK/NG][Data][x]

* Similarly, if other functions transmit '0 x FF' data based on this format, Acknowledgement data feed back presents status about each function.
* OK Ack., Error Ack. and other message may display on the screen when TV is power On.

02. Aspect Ratio (Command: k c) (Depending on model)
(Main Picture Size)

► To adjust the screen format. (Main picture format) You can also adjust the screen format using the Aspect Ratio in the Q.MENU. or PICTURE menu.

Transmission
[k][c][ ][Set ID][ ][Data][Cr]

Data 01 : Normal screen (4:3) (Just Scan Off)
02 : Wide screen (16:9) (Just Scan Off)
06 : Original (Just Scan Off)
09 : Just Scan

* Please make sure that the model doesn't support both Vertical Zoom and All-Direction Zoom mode.

Ack
[c][ ][Set ID][ ][OK/NG][Data][x]

* Using the PC input, you select either 16:9 or 4:3 screen aspect ratio.
* In DTV/HDMI (1080i 50 Hz / 60 Hz, 720p 50Hz / 60 Hz, 1080p 24 Hz / 30 Hz / 50 Hz / 60 Hz), Component(720p, 1080i, 1080p 50 Hz / 60 Hz) mode, Just Scan is available.
* Full Wide is supported only for Digital, Analogue, AV.

03. Screen Mute (Command: k d)

▶ To select screen mute on/off.

Transmission
[k][d][ ][Set ID][ ][Data][Cr]

Data 00 : Screen mute off (Picture on)
Video mute off
01 : Screen mute on (Picture off)
10 : Video mute on

Ack
[d][ ][Set ID][ ][OK/NG][Data][x]

* In case of video mute on only, TV will display On Screen Display(OSD). But, in case of Screen mute on, TV will not display OSD.

04. Volume Mute (Command: k e)

▶ To control volume mute on/off.
You can also adjust mute using the MUTE button on remote control.

Transmission
[k][e][ ][Set ID][ ][Data][Cr]

Data 00 : Volume mute on (Volume off)
01 : Volume mute off (Volume on)

Ack
[e][ ][Set ID][ ][OK/NG][Data][x]

05. Volume Control (Command: k f)

▶ To adjust volume.
You can also adjust volume with the volume buttons on remote control.

Transmission
[k][f][ ][Set ID][ ][Data][Cr]

Data Min : 00 to Max : 64

* Refer to Real data mapping.

Ack
[f][ ][Set ID][ ][OK/NG][Data][x]

06. Contrast (Command: k g)

▶ To adjust screen contrast.
You can also adjust contrast in the PICTURE menu.

Transmission
[k][g][ ][Set ID][ ][Data][Cr]

Data Min : 00 to Max : 64

* Refer to Real data mapping.

Ack
[g][ ][Set ID][ ][OK/NG][Data][x]

07. Brightness (Command: k h)

▶ To adjust screen brightness.
You can also adjust brightness in the PICTURE menu.

Transmission
[k][h][ ][Set ID][ ][Data][Cr]

Data Min : 00 to Max : 64

* Refer to Real data mapping.

Ack
[h][ ][Set ID][ ][OK/NG][Data][x]

08. Colour (Command: k i)

► To adjust the screen Colour.
You can also adjust colour in the PICTURE menu.

Transmission
[k][i][ ][Set ID][ ][Data][Cr]

Data Min : 00 to Max : 64

* Refer to Real data mapping.

Ack
[i][ ][Set ID][ ][OK/NG][Data][x]

09. Tint (Command: k j)

► To adjust the screen tint.
You can also adjust tint in the PICTURE menu.

Transmission
[k][j][ ][Set ID][ ][Data][Cr]

Data Red : 00 to Green : 64

* Refer to Real data mapping.

Ack
[j][ ][Set ID][ ][OK/NG][Data][x]

10. Sharpness (Command: k k)

► To adjust the screen sharpness.
You can also adjust sharpness in the PICTURE menu.

Transmission
[k][k][ ][Set ID][ ][Data][Cr]

Data Min : 00 to Max : 32

* Refer to Real data mapping.

Ack
[k][ ][Set ID][ ][OK/NG][Data][x]

11. OSD Select (Command: k l)

► To select OSD (On Screen Display) on/off when controlling remotely.

Transmission
[k][l][ ][Set ID][ ][Data][Cr]

Data 00 : OSD off 01 : OSD on

Ack
[l][ ][Set ID][ ][OK/NG][Data][x]

12. Remote control lock mode (Command: k m)

► To lock the front panel controls on the monitor and remote control.

Transmission
[k][m][ ][Set ID][ ][Data][Cr]

Data 00 : Lock off 01 : Lock on

Ack
[m][ ][Set ID][ ][OK/NG][Data][x]

* If you are not using the remote control, use this mode. When main power is on/off, external control lock is released.
* In the standby mode, if key lock is on, TV will not turn on by power on key of IR & Local Key.

13. Balance (Command: k t)

► To adjust balance.
You can also adjust balance in the AUDIO menu.

Transmission
[k][t][ ][Set ID][ ][Data][Cr]

Data L : 00 to R : 64

* Refer to Real data mapping.

Ack
[t][ ][Set ID][ ][OK/NG][Data][x]

14. Colour Temperature (Command: x u)

► To adjust colour temperature. You can also adjust Colour Temperature in the PICTURE menu.

Transmission
[x][u][ ][Set ID][ ][Data][Cr]

Data Warm: 00 to Cool:64

* Refer to Real data mapping.

Ack
[u][ ][Set ID][ ][OK/NG][Data][x]

15. Energy Saving (Command: j q)

► To reduce the power consumption of the TV. You can also adjust Energy Saving in PICTURE menu.

Transmission
[j][q][ ][Set ID][ ][Data][Cr]

Power Saving Function					Level				Description
7	6	5	4		3	2	1	0	
0	0	0	0	Low Power	0	0	0	0	Off
0	0	0	0	Low Power	0	0	0	1	Minimum
0	0	0	0	Low Power	0	0	1	0	Medium
0	0	0	0	Low Power	0	0	1	1	Maximum
0	0	0	0	Low Power	0	1	0	1	Screen Off
0	0	0	0	Low Power	0	1	0	0	Auto

► 'Auto' is available in TV that supports 'Intelligent Sensor'.

Ack
[q][ ][Set ID][ ][OK/NG][Data][x]

16. Auto Configuration (Command: j u) (Only RGB support model)

► To adjust picture position and minimize image shaking automatically. It works only in RGB (PC) mode.

Transmission
[j][u][ ][Set ID][ ][Data][Cr]

Data 01 : To set

Ack
[u][ ][Set ID][ ][OK/NG][Data][x]

17. Equalize (Command : j v)

► To adjust equalize.

Transmission
[j][v][ ][Set ID][ ][Data][Cr]

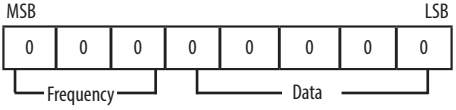

7	6	5	Frequency	4	3	2	1	0	Step
0	0	0	1st Band	0	0	0	0	0	0(decimal)
0	0	1	2nd Band	0	0	0	0	1	1(decimal)
0	1	0	3rd Band	...	...	...	...	...	...
0	1	1	4th Band	1	0	0	1	1	19(decimal)
1	0	0	5th Band	1	0	1	0	0	20(decimal)

Ack
[v][ ][Set ID][ ][OK/NG][Data][x]

18. Tune Command (Command: m a)

► Select channel to following physical number.

Transmission
[m][a][ ][Set ID][ ][Data 00][ ][Data 01][ ][Data 02][Cr]

Data 00 : High channel data

Data 01 : Low channel data
ex. No. 47 -> 00 2F (2FH)
No. 394 -> 01 8A (18AH),
DTV No. 0 -> Don't care

Data 02 : [Antenna]
0 x 00 : Analogue Main
0 x 10 : DTV Main
0 x 20 : Radio

[Cable]
0 x 80 : Analogue Main
0 x 90 : DTV Main
0 x A0 : Radio

[Satellite]
0 x 40 : DTV Main
0 x 50 : Radio Main

Channel data range
Min : 00 Max : 270F (0 to 9999)

Ack
[a][ ][Set ID][ ][OK/NG][Data][x]

19. Programme Add/Skip (Command: m b)

► To set skip status for the current Programme.

Transmission
[m][b][ ][Set ID][ ][Data][Cr]

Data 00 : Skip 01 : Add

Ack
[b][ ][Set ID][ ][OK/NG][Data][x]

20. Key (Command: m c)

► To send IR remote key code.

Transmission
[m][c][ ][Set ID][ ][Data][Cr]

Data IR CODES

Ack
[c][ ][Set ID][ ][OK/NG][Data][x]

21. Control Back Light (Command: m g)

► To control the backlight.

Transmission
[m][g][ ][Set ID][ ][Data][Cr]

Data Min : 00 to Max : 64

Ack
[g][ ][Set ID][ ][OK/NG][Data][x]

22. Input select (Command: x b)
(Main Picture Input)

► To select input source for main picture.

Transmission
[x][b][ ][Set ID][ ][Data][Cr]

Data Structure

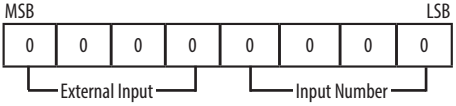

External Input				Data
0	0	0	0	DTV
0	0	0	1	Analogue
0	0	1	0	AV
0	1	0	0	Component
0	1	1	0	RGB
0	1	1	1	HDMI
1	0	0	0	
1	0	0	1	
1	0	1	0	

Input Number				Data
0	0	0	0	Input1
0	0	0	1	Input2
0	0	1	0	Input3
0	0	1	1	Input4

Ack
[b][ ][Set ID][ ][OK/NG][Data][x]

*** Real data mapping**

00 :	Step 0
⋮	
A :	Step 10 (Set ID 10)
⋮	
F :	Step 15 (Set ID 15)
10 :	Step 16 (Set ID 16)
⋮	
64 :	Step 100
⋮	
6E :	Step 110
⋮	
73 :	Step 115
74 :	Step 116
⋮	
CF :	Step 199
⋮	
FE :	Step 254
FF :	Step 255

Record the model number and serial number of the TV.
Refer to the label on the back cover and quote this information to your dealer when requiring any service.

MODEL _____

SERIAL _____