LG
Life's Good

OWNER'S MANUAL

Mini-PC for Signage (Hardware)

Please read this manual carefully before operating the product and retain it for future reference.

Mini-PC for Signage
PC500-A***
PC500-B***
PC500-F***

www.lgecommercial.com
www.lg.com

TABLE OF CONTENTS

Licenses 4

Replacing Flash Memory Battery 4
PC500-A*** / PC500-B***

Specifications 5

General Specifications 5

Multi I/O Port 5

Operational Specifications 6

Included in the Box 7

Basic Components 7

Optional Items 7

Connections 8

Front 8

Back Panel 8

How to Install on Monitor 9

**WS50, **LT55A Models 9

**WX50MF Model 10

In/Out Cable Connection 11

Connecting a Monitor with an HDMI Cable 12

Connecting/Disconnecting HDMI Audio Device in Windows 14

Connecting a Monitor with DP Cable 15

Connection to Multiple Monitors 18

PC500-F***

Specifications 20

General Specifications 20

Multi I/O Port 20

Operational Specifications 21

Included in the Box 22

Basic Components 22

Optional Items 23

Connections 24

Front Panel..... 24

Back Panel 24

How to Install on Monitor 25

**WS50, **LT55A Models 25

**WX50MF Model..... 26

How to Install the Guide Bracket 27

In/Out Cable Connection 29

Connecting a Monitor with DP Cable 30

Connecting a Monitor with DP to HDMI Adapter 33

Connecting/Disconnecting DP Audio Device in Windows 36

Connection to Multiple Monitors..... 37

Limitations of Microsoft Windows Embedded Standard 39

Frequently Asked Questions (FAQs) 39

Unified Codecs 40

Network Setting 40

Attention

- LG Electronics does not guarantee the service of the OS not included in the purchase of the product.

Licenses

Supported licenses may differ by model. For more information of the licenses, visit *www.lg.com*.

HDMI, the HDMI logo and High-Definition Multimedia Interface are trademarks or registered trademarks of HDMI Licensing LLC.

Note

- It may differ depending on the product.

Replacing Flash Memory Battery

The flash memory battery helps maintain the system (BIOS) settings when the computer is powered off.
The flash memory battery is a consumable part.

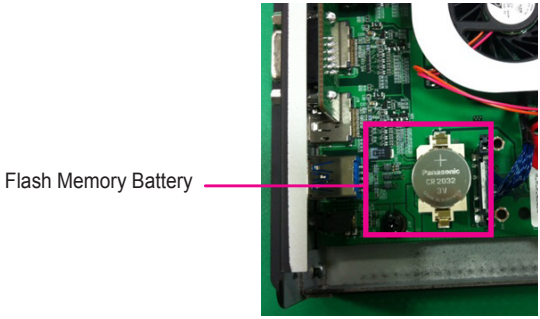

Attention

- When you change the flash memory battery, it is recommended that you seek assistance from the LG Electronics Service Center.
- Using a non-standard battery may cause a malfunction.
- If a malfunction is caused by trying to replace a part on your own, servicing will be charged.
- If the product is not connected to the AC power for an extended period of time, the flash memory battery may be discharged. In this case, servicing will be charged.
- When the battery is discharged, the message below will appear on the boot screen. In this case, you should replace the battery.

  => ERROR
  0271: Check data and time settings
  WARNING
  0251: System CMOS checksum bad - Default configuration used
  Press <F1> to resume, <F2> to Setup

Specifications

Attention

- Product specifications may change without prior notice to improve performance.

General Specifications

Dimensions	260 mm (W) x 40.1 mm (H) x 275.9 mm (D) (only Set)	
Weight	2.08 Kg (only Set)	
CPU	Intel® Celeron® Processor P4500 (2M Cache, 1.86 GHz)	
	Intel® Core™ i5-520M Processor (3M Cache, 2.40 GHz)	
Chip Set	Mobile Intel® QM57 Express Chipset	
Main Memory	DDR3 1333 SODIMM type 2 GB	
Secondary Storage Device	SSD	8 GB, 16 GB, 32 GB, 64 GB
O/S	Microsoft® Windows® Embedded Standard Microsoft® Windows® Embedded Standard 7 E Microsoft® Windows® Embedded Standard 7 P	
Embedded battery	Applied	

Note

Windows 7 is not supported in case of SSD 8 GB.

Multi I/O Port

Serial Port	One external RS-232 Serial port
USB Port	Hi-Speed USB 2.0 port 480 Mbps rate (x4)
LAN Port	Intel® 82577 Gigabit Ethernet PHY
HDMI / DP	Intel® HD Graphics Controller
Mini PCIe	Supported
LINE OUT	Supported

Operational Specifications

Resolution	Maximum Resolution	DP: 2560 x 1600 @ 60 Hz HDMI: 1920 x 1200 @ 60 Hz		
	Recommended Resolution	1920 x 1080 @ 60 Hz		
Power	Power Rating	100-240 V~ 50/60 Hz 1.3 A		
Operating Condition		Sync (H/V)	Video	LED
	Normal Mode	On/On	Active	On
	Deep Sleep Mode (Set = Off)	Off/Off	Off	Off
Operating Conditions	Operating Conditions	5 ℃ to 40 ℃	Humidity	10 % to 80 %
	Storage Conditions	-20 ℃ to 60 ℃	Humidity	5 % to 95 %

Note

- The resolution which is supported may differ depending on the monitors.
- Booting the PC500 using a device connected via a USB port may not work properly, depending on the device.

Included in the Box

Basic Components

The PC500 with the following components. Please check that these components have been included prior to installation.

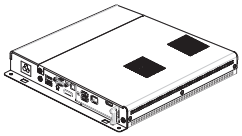

PC500

Owner's Manual / Cards

Power Cable

M 3.0 mm x Pitch 0.5 mm x Length 6.0 mm X 4ea

Attention

- These illustrations may differ from your product and are subject to change.
- In some countries, a Y-type cable may be provided instead of the power cord.
- Always use genuine components to ensure safety and product life. Any damages or injuries by misuse or using an improper accessory are not covered by the warranty.

Note

- SuperSign software and manual.
  - Downloading from the LG Electronics website.
  - Visit the LG Electronics website (*http://www.lgecommercial.com/supersign*) and download the latest software for your model.
    (Depending on the model, this feature may not be supported.)

Optional Items

The following items are supported by the PC500, but are not provided with the product.

Please purchase optional items as needed.

- HDMI cable, DP cable, LINE-OUT cable, LAN cable, mouse, keyboard.

Connections

Front

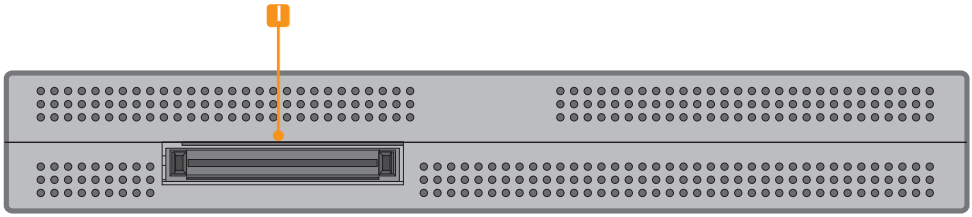

Back Panel

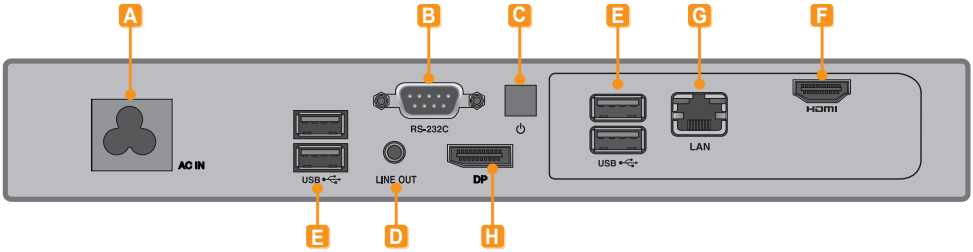

Number	Connection	Description
A	Power Cable In	For the power cable.
B	RS-232C Out	For the RS-232C cable.
C	Power Button	Turns PC500 on.
D	LINE-OUT Connector	For a LINE-OUT cable for analog audio transfer.
E	USB In	For USB-type devices, including memory, hard disk, CD-ROM, keyboard, and mouse.
F	HDMI Out	For an HDMI-compatible monitor.
G	LAN Connector	For a LAN cable.
H	DP Output Port	Connects the cable to the DP-supporting monitor.
I	Monitor Docking Port	Connects the PC500 to a monitor.

How to Install on Monitor

**WS50, **LT55A Models

We recommend you to use the items provided with your PC500 and follow our instructions for integrating the product with your monitor in order to ensure the correct results.

Attention

The illustrations shown are to guide your integration and may differ from your product.

1 Place a soft cloth on the table and put the product with the screen facing downward. Push the PC500 into the compartment to mount it.

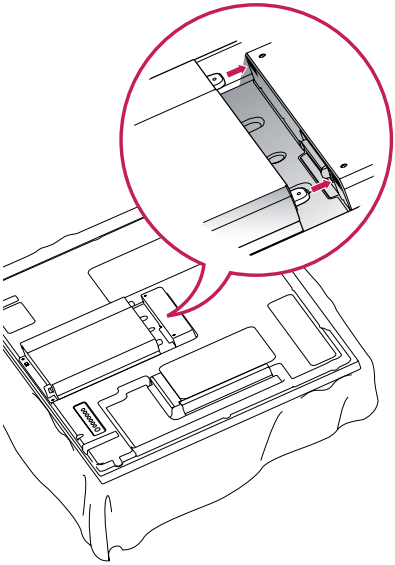

Attention

- Be careful of sharp edges on the rail and the handle.
- Fixing the product with non-standard screws may cause damage or the product to fall down. LG Electronics is not liable for any accidents relating to the use of non-standard screws.
- Do not over tighten the screws as this may cause damage to the product and void your warranty."

2 Attach the PC500 on the set using the four screws provided.

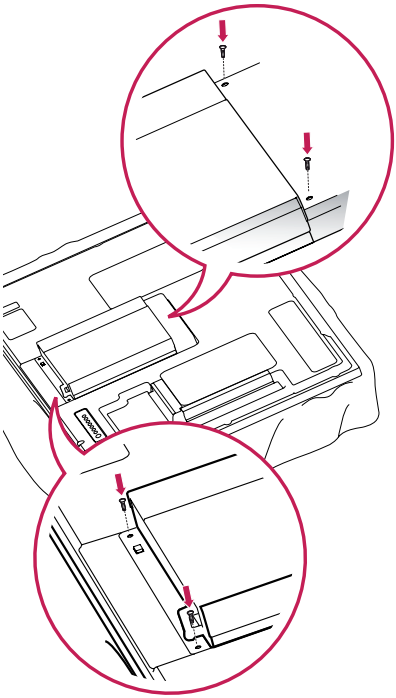

**WX50MF Model

For proper use, it is recommended to use the basic components provided with the PC500 to attach it to a monitor.

Attention

The illustrations shown are to guide your integration and may differ from your product.

1 Place a soft cloth on the table and put the product with the screen facing downward. Remove the opening cover by unfastening two screws as shown in the picture.

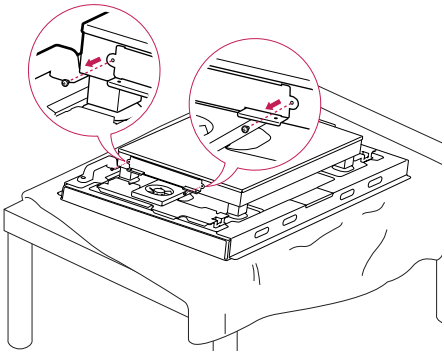

2 Push the PC500 into the compartment to mount it.

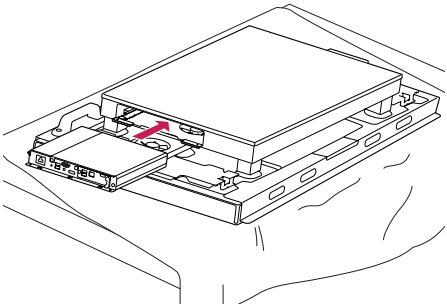

3 Attach the PC500 on the product using the two screws provided.

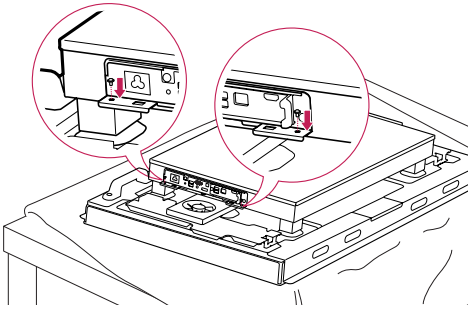

Attention

- Be careful of sharp edges on the rail and the handle.
- Attaching the product with non-standard screws may cause damage or the product to fall down. LG Electronics is not liable for any accidents relating to the use of non-standard screws.
- Do not over tighten the screws as this may cause damage to the product and void your warranty.

In/Out Cable Connection

To view images on the monitor that is not connected to the monitor docking port of PC500, you need to connect the PC500 to the monitor via an HDMI or DP cable.

Attention

- HDMI, DP, LINE-OUT, and LAN cables are not included in the basic components. You need to purchase a cable separately as it is not provided as an accessory.
- After cabling is complete, assign the SET ID of the monitor to be connected to PC500.
- To configure the SET ID, please refer to the owner's manual for your monitor.

Note

When using the SuperSign Manager software:

- The monitor's SET ID is a unique number used to identify the monitor. You can choose a number from 1 to 25. The SET ID allows the SuperSign Manager software to identify the monitor.
- In order to directly connect the monitor to the PC500, its SET ID must be set to 1.
- To use SuperSign Manager, the monitor that will be connected to a PC500 must support the LG RS232C protocol. A monitor supporting the LG RS232C protocol can be controlled the monitor functions, such as brightness and sound, using SuperSign Manager.

Connecting a Monitor with an HDMI Cable

HDMI connections allow digital video and audio signals to be transferred with one cable.
HDMI cable connections do not require an additional audio in cable.

Attention

- The monitor to connect with PC500 should have the HDMI in for the HDMI connection.
- To use an HDMI device, connection should be done on the Windows, the operating system of PC500. To connect and disconnect the HDMI audio device, see the Connecting/Disconnecting HDMI Audio Device in Windows section of this document.

1 Connect the appropriate power cables to a monitor and PC500 respectively.

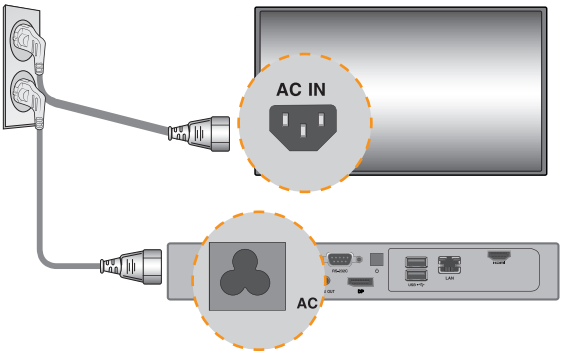

2 Connect PC500 to a monitor with an HDMI cable.

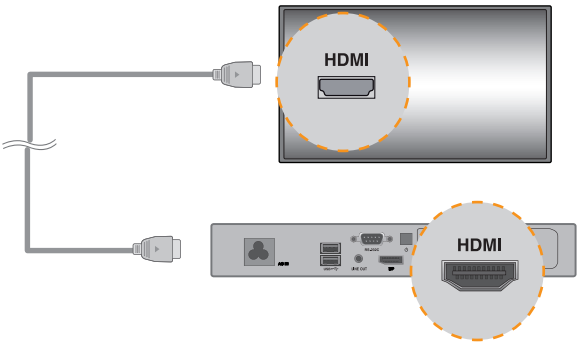

3 Connect PC500 (OUT) to the monitor (IN) with an RS-232C cable.

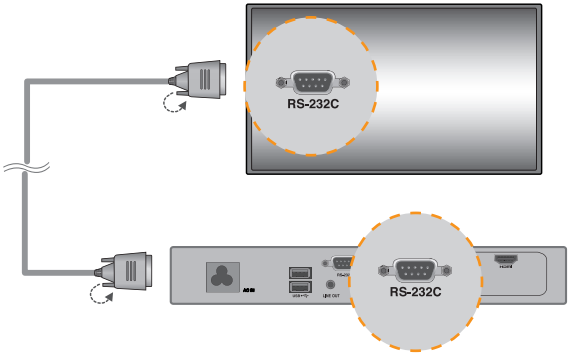

4 Connect a LAN cable to PC500.

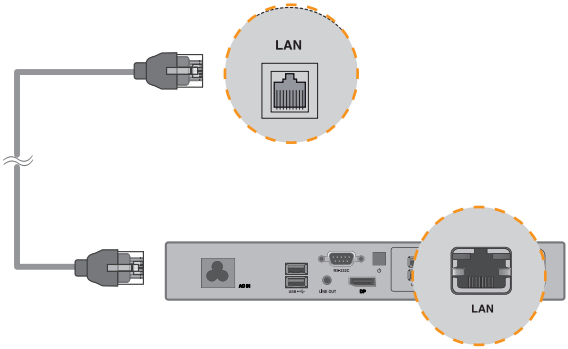

Connecting/Disconnecting HDMI Audio Device in Windows

Connecting HDMI Audio Device

Move to the desktop of the monitor connected to the PC500.

1	Click the start button in the lower left of the screen.
2	Select **Start > Control Panel > Sounds and Audio Devices > Audio.**
3	Select **Play Sounds > Intel(R) Display Audio Output 1** from the list and click **OK**.

Disconnecting HDMI Audio Device

Move to the desktop of the monitor connected to the PC500.

1	Click the start button in the lower left of the screen.
2	Select **Start > Control Panel > Sounds and Audio Devices > Audio.**
3	Select **Play Sounds > Realtek HD Audio output from the list** and click **OK**.

Connecting/Disconnecting HDMI Audio Device in Windows Embedded Standard 7 E,P

1	Select **Start > Control Panel > Hardware and Sound > Sound**.
2	Click the **Play** tap first. Right-click on the **HDMI device** or **speakers** you want and select **Set as Default Device** then click **OK** to connect the HDMI audio device or select Disable to disconnect it. ※ In order to change the audio devices, you may restart the computer.

Attention

- If an audio device is connected or removed while media content is played, you need to stop the content and play again.
- If an HDMI cable is removed from the PC500, sound does not play. In addition, when the cable is reconnected, it may take time before sound plays again.

Connecting a Monitor with DP Cable

Attention

- To enable DP connection, the monitor that will be connected to PC500 must support the DP input port.
- When connecting the DP (DisplayPort) cable, use the standard cable. Using a non-standard cable may cause a malfunction.

1 Connect the appropriate power cables to a monitor and PC500 respectively.

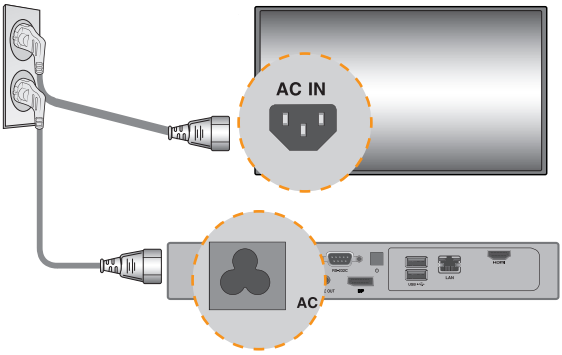

2 Connect PC500 to the monitor via a DP cable.

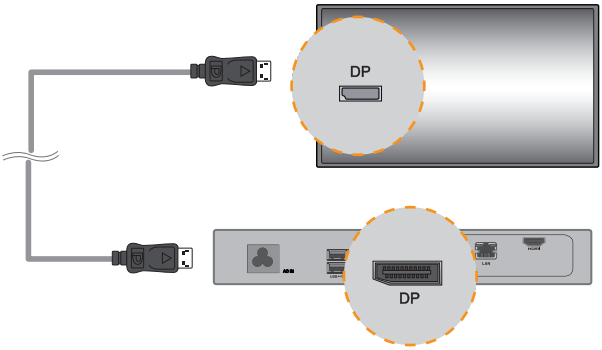

3 Connect PC500 to the monitor (IN) with an RS-232C cable.

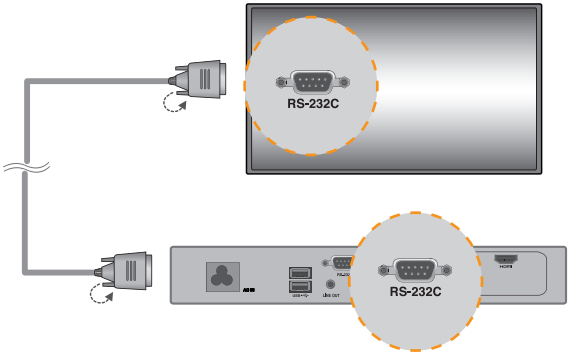

4 Connect the PC500 to the monitor with a LINE-OUT cable.

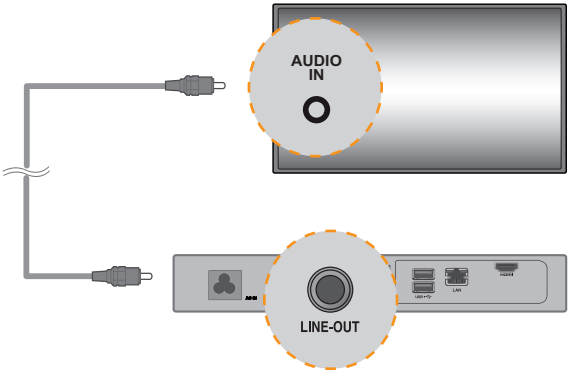

5 Connect a LAN cable to PC500.

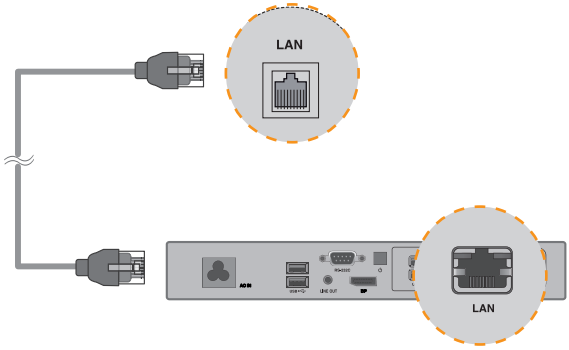

Attention

- PC500 prioritizes video output in the following order: DP → HDMI. If you connect multiple cables simultaneously and turn the product on, video output is prioritized accordingly.
- When the product is turned on after cable connection or the operating system is completely booted, DP and HDMI video output start operating.
- The product does not support a dual mode where DP can be switched either to HDMI or DVI. It is only for DP output.
- The DisplayPort (DP) of the PC500 does not support digital audio output. It is recommended to use it with a line-out cable for analog audio output.

Connection to Multiple Monitors

Multiple monitors can be connected to a single PC500. (The maximum number of monitors connected varies depending on the monitor type.) You can set the tile mode by connecting multiple monitors.

1	Connect the RS-232C Out port of the PC500 to the RS-232C In port of the first monitor (SET ID 1).
2	Connect rest of the monitors using a RS-232C cable. (Be careful about input and output ports.)

**WS50, **LT55A

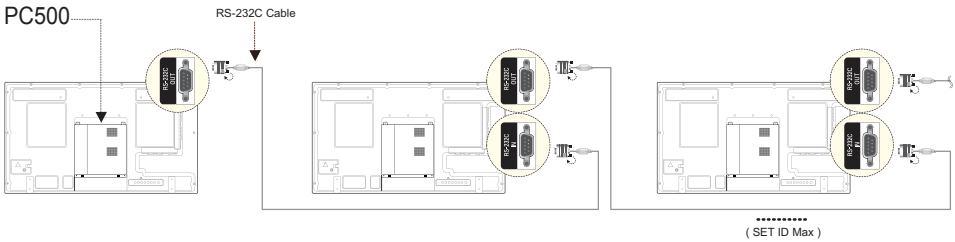

**WX50MF

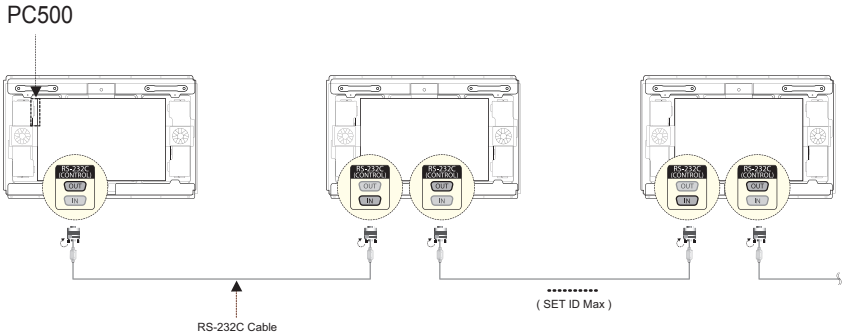

Attention

- You may want to purchase additional RS-232C cables to use several monitors together.
- You cannot connect multiple monitors using an HDMI cable or DP cable.
- Refer to the owner's manual of the monitor for the SET ID Max. value.

Attention

- Shut down the system properly using the Windows Start menu. Otherwise, this may cause errors such as data loss, which will lead damage to the product.
- Keep the air inlet/outlet at the top of the product from getting clogged by dust or foreign matter and prevent debris from attaching to the fan. Otherwise, this may cause malfunction.
- Avoid using the product in a closed environment which could prevent the flow of the air. Otherwise, this may increase the product temperature, which will prevent it from operating normally and affect the product life.
- Using converting devices, such as DP to HDMI adapter and HDMI to DVI cable, may cause compatibility issues.
- When connecting the PC500 into **WS50, **LT55A or **WX50MF through the monitor docking port, set the monitor input to SuperSign.
- When connecting/removing the PC500 into/from the monitor through the monitor docking port, make sure to unplug the power cord connected to monitor and PC500 respectively.
- The following monitors support the connection through the monitor docking port.
  **WS50, **LT55A (LG Electronics)
  **WX50MF (LG Electronics)
- Disconnect the power cord first before moving or installing the product. Otherwise, this may result in electric shock.
- 'Make sure to reboot the PC500, when connecting the PC500 through the monitor docking port and using the Factory Reset function.
- Do not touch the air inlet/outlet while it is operating. It may cause burns.
- Using wireless devices may cause a malfunction.

Specifications

Attention

- Product specifications may change without prior notice to improve performance.

General Specifications

Dimensions	260 mm (W) x 40.1 mm (H) x 276.75 mm (D) (only Set)	
Weight	2.0 Kg (only Set)	
CPU	Intel® Celeron™ N2920 Processor (2M Cache, 1.86/2 GHz) Intel® Celeron™ N2930 Processor (2M Cache, 1.83/2.16 GHz)	
Chip Set	Intel® Bay Trail-M Chipset	
Main Memory	DDR3L 1066MHz 4096MB/2048MB SO-DIMM type	
Secondary Storage Device	SSD	16 GB, 32 GB, 64 GB
O/S	Windows® Embedded Standard 7 P	
Embedded battery	Applied	

Note

- The OS may not be provided, depending on the product.

Multi I/O Port

Serial Port	One external RS-232 Serial port
USB Port	USB Port x 4
LAN Port	Gigabit Ethernet PHY
DP	Intel® HD Graphics Controller
Mini PCIe	Supported
LINE OUT	Supported

Operational Specifications

Resolution	Maximum Resolution	DP: 1920 x 1080 @ 60 Hz		
	Recommended Resolution	1920 x 1080 @ 60 Hz		
Power	Power Rating	100-240 V~ 50/60 Hz 1.3 A		
Operating Condition		Video	LED	Wattage
	Max Mode	Active	On	≤15W
	Deep Sleep Mode (Set = Off)	Off	Off	≤1W
Environmental Conditions	Operating Conditions	5 ℃ to 40 ℃	Humidity	10 % to 80 %
	Storage Conditions	-20 ℃ to 60 ℃	Humidity	5 % to 95 %

Note

- The resolution which is supported may differ depending on the monitors.
- Booting the PC500-F*** using a device connected via a USB port may not work properly, depending on the device.

Included in the Box

Basic Components

The PC500-F*** with the following components. Please check that these components have been included prior to installation.

< Basic Components >

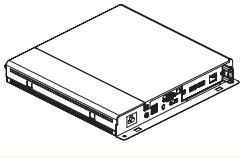

PC500-F***

Owner's Manual / Cards

Power Cable

< Optional Components >

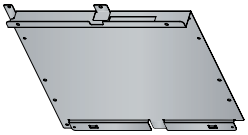

Guide Bracket

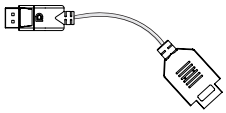

DP to HDMI Adapter

M3 L6 x 4 EA (fixing screws for PC500-F***)

M3 L8 x 4 EA (fixing screws for metal back cover)

M3 L12 x 4 EA (fixing screws for plastic back cover)

Optional Items

The following items are supported by the PC500-F***, but are not provided with the product.

Please purchase optional items as needed.

- HDMI kit, HDMI cable, DP cable, LINE-OUT cable, LAN cable, mouse, keyboard.

Attention

- These illustrations may differ from your product and are subject to change.
- In some countries, a Y-type cable may be provided instead of the power cord.
- Always use genuine components to ensure safety and product life. Any damages or injuries by misuse or using an improper accessory are not covered by the warranty.
- The guide bracket and The DP to HDMI adapter may not be provided depending on your region or model.
- The DP to HDMI adapter may not be compatible with products other than PC500-F***.
- The DP to HDMI adapter does not provide the function of converting HDMI to DP.

Note

- SuperSign software and manual.
  - Downloading from the LG Electronics website.
  - Visit the LG Electronics website (*http://www.lgecommercial.com/supersign*) and download the latest software for your model.
    (Depending on the model, this feature may not be supported.)

Connections

Front Panel

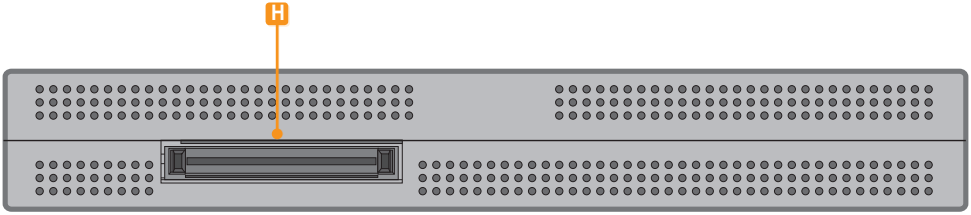

Back Panel

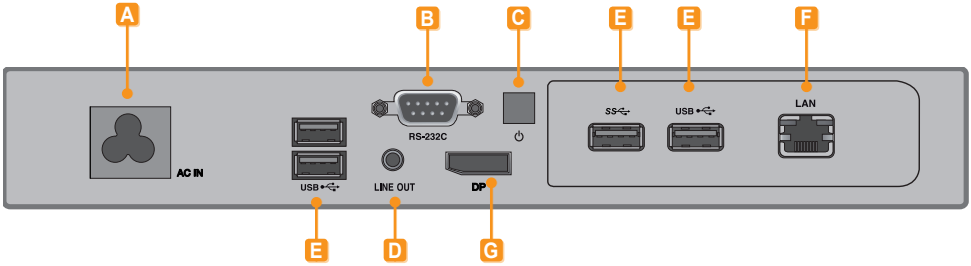

Number	Connection	Description
A	Power Cable In	For the power cable.
B	RS-232C Out	For the RS-232C cable.
C	Power Button	Turns PC500-F*** on.
D	LINE-OUT Connector	For a LINE-OUT cable for analog audio transfer.
E	USB In	For USB-type devices, including memory, hard disk, CD-ROM, keyboard, and mouse.
F	LAN Connector	For a LAN cable.
G	DP Output Port	Connects the cable to the DP-supporting monitor.
H	Monitor Docking Port	Connects the PC500-F*** to a monitor.

How to Install on Monitor

**WS50, **LT55A Models

We recommend you to use the items provided with your PC500-F*** and follow our instructions for integrating the product with your monitor in order to ensure the correct results.

Attention

- The illustrations shown are to guide your integration and may differ from your product.

1 Place a soft cloth on the table and put the product with the screen facing downward. Push the PC500-F*** into the compartment to mount it.

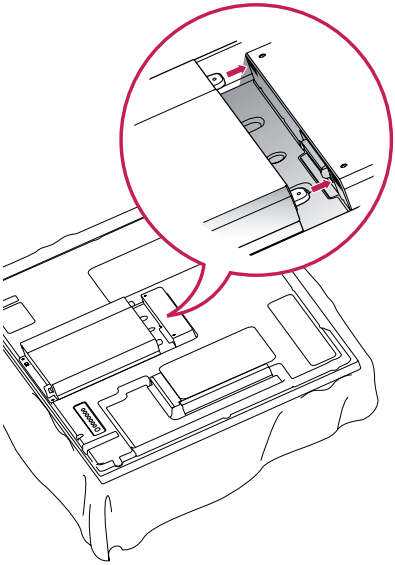

Attention

- Be careful of sharp edges on the rail and the handle.
- Fixing the product with non-standard screws may cause damage or the product to fall down. LG Electronics is not liable for any accidents relating to the use of non-standard screws.
- Do not over tighten the screws as this may cause damage to the product and void your warranty.

2 Attach the PC500-F*** on the set using the four screws provided.

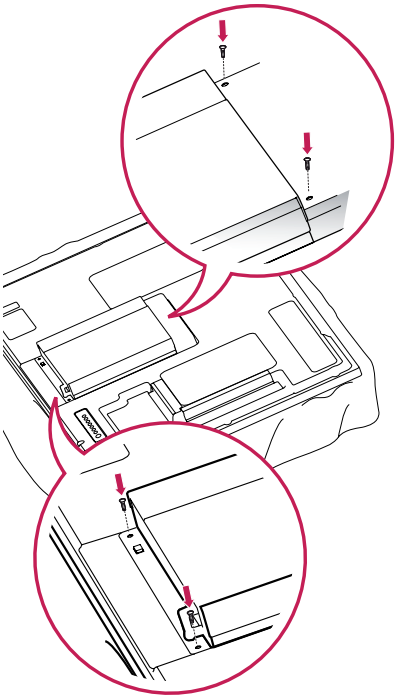

**WX50MF Model

For proper use, it is recommended to use the basic components provided with the PC500-F*** to attach it to a monitor.

Attention

- The illustrations shown are to guide your integration and may differ from your product.

1 Place a soft cloth on the table and put the product with the screen facing downward. Remove the opening cover by unfastening two screws as shown in the picture.

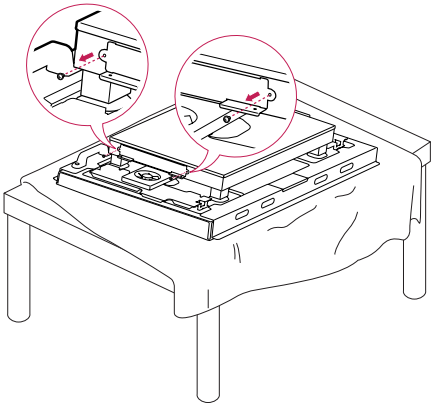

2 Push the PC500-F*** into the compartment to mount it.

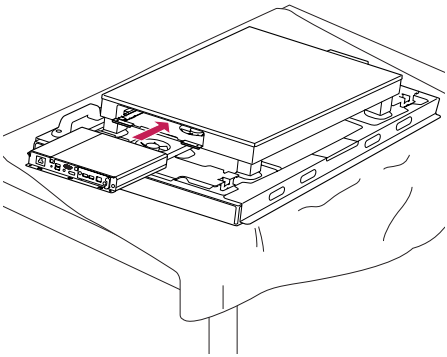

3 Attach the PC500-F*** on the product using the two screws provided.

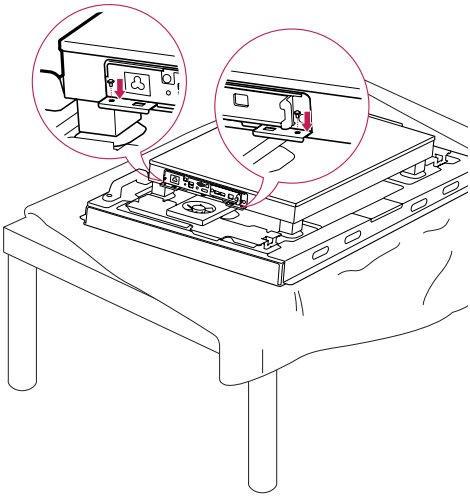

Attention

- Be careful of sharp edges on the rail and the handle.
- Attaching the product with non-standard screws may cause damage or the product to fall down. LG Electronics is not liable for any accidents relating to the use of non-standard screws.
- Do not over tighten the screws as this may cause damage to the product and void your warranty.

How to Install the Guide Bracket

1 Make sure to match the numbers carved on the guide bracket and the numbers on the back cover when assembling the guide bracket.

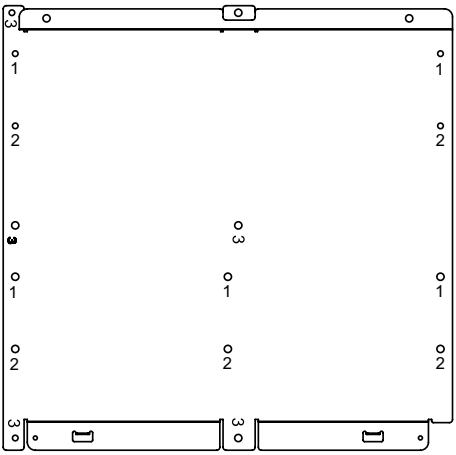

2 Attach the guide bracket to the back of your monitor. (3 or 4 screws are required depending on the model.)

<Model that requires 3 fixing screws for assembling the guide bracket>

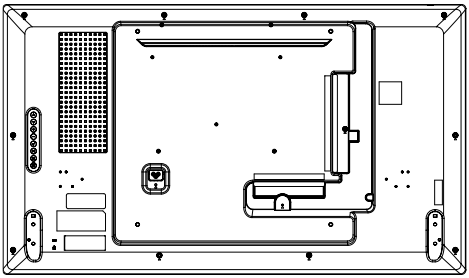

<Model that requires 4 fixing screws for assembling the guide bracket>

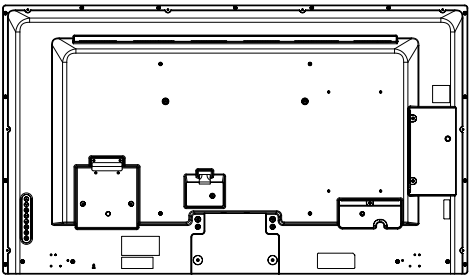

3 Assemble the PC500-F*** to the guide bracket with the fixing screws.

<Model that requires 3 fixing screws for assembling the guide bracket>

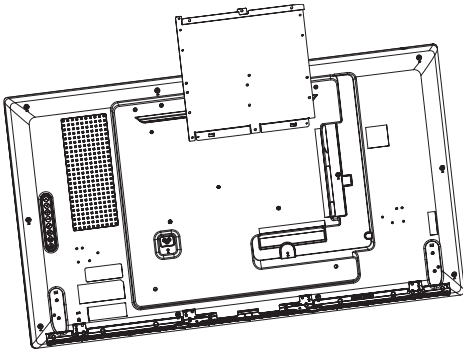

<Model that requires 3 fixing screws for assembling the guide bracket>
Attach the PC500-F*** to the guide bracket with 4 fixing screws.

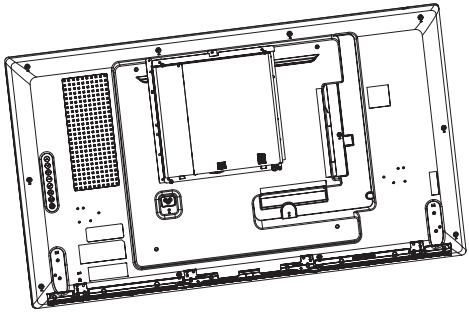

<Model that requires 4 fixing screws for assembling the guide bracket>

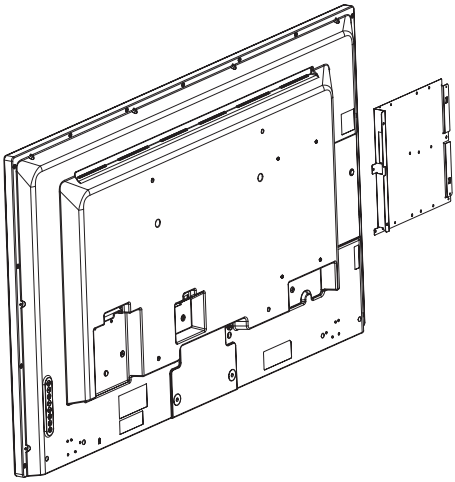

<Model that requires 4 fixing screws for assembling the guide bracket>
Attach the PC500-F*** to the guide bracket with 4 fixing screws.

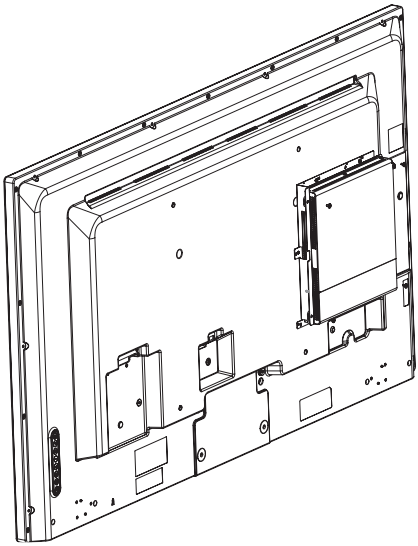

In/Out Cable Connection

To view images on the monitor that is not connected to the monitor docking port of PC500-F***, you need to connect the PC500-F*** to the monitor via a DP cable.

Attention

- HDMI kit, HDMI, DP, LINE-OUT, and LAN cables are not included in the basic components. You need to purchase a cable separately as it is not provided as an accessory.
- After cabling is complete, assign the SET ID of the monitor to be connected to PC500-F***.
- To configure the SET ID, please refer to the owner's manual for your monitor.

Note

When using the SuperSign Manager software:

- The monitor's SET ID is a unique number used to identify the monitor. You can choose a number from 1 to 25. The SET ID allows the SuperSign Manager software to identify the monitor.
- In order to directly connect the monitor to the PC500-F***, its SET ID must be set to 1.
- To use SuperSign Manager, the monitor that will be connected to a PC500-F*** must support the LG RS232C protocol. A monitor supporting the LG RS232C protocol can be controlled the monitor functions, such as brightness and sound, using SuperSign Manager.

Connecting a Monitor with DP Cable

Attention

- To enable DP connection, the monitor that will be connected to PC500-F*** must support the DP input port.
- When connecting the DP (DisplayPort) cable, use the standard cable. Using a non-standard cable may cause a malfunction.

1 Connect the appropriate power cables to a monitor and PC500-F*** respectively.

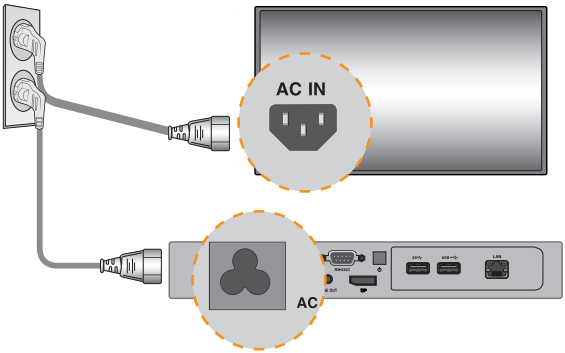

2 Connect PC500-F*** to the monitor via a DP cable.

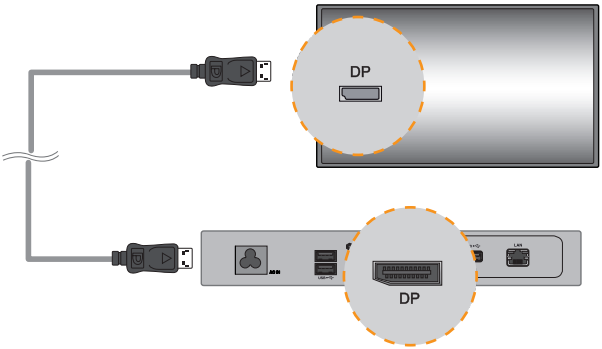

3 Connect PC500-F*** to the monitor (IN) with an RS-232C cable.

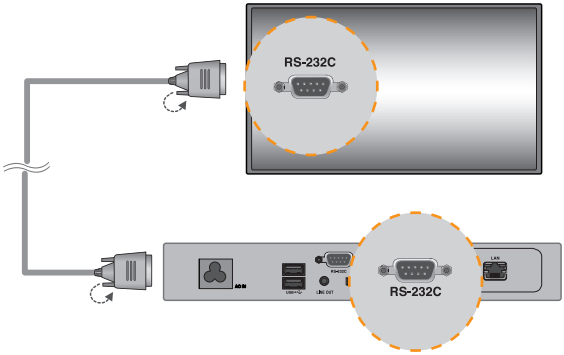

4 Connect a LAN cable to PC500-F***.

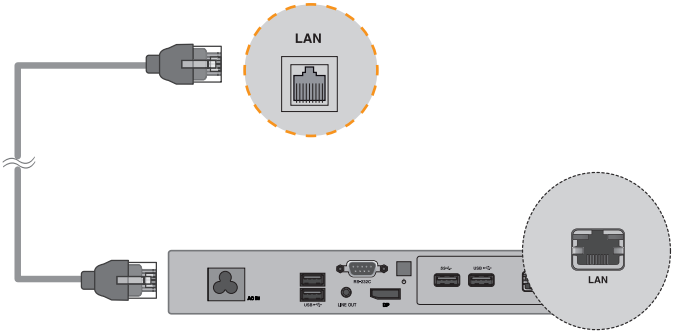

Attention

- When the product is turned on after cable connection or the operating system is completely booted, DP video output starts operating.
- The product does not support a dual mode where DP can be switched either to HDMI or DVI. It is only for DP output.

Connecting a Monitor with DP to HDMI Adapter

Note

- Use a certified cable with the HDMI logo attached. If you do not use a certified HDMI cable, the screen may not display or a connection error may occur.
- Recommended HDMI cable types
  -High-Speed HDMI®/™ Cable
  -High-Speed HDMI®/™ Cable with Ethernet

Attention

- To enable DP to HDMI Adapter connection, the monitor that will be connected to PC500-F*** must support the DP input port.
- When connecting the DP (DisplayPort) to HDMI Adapter cable, use the standard cable. Using a non-standard cable may cause a malfunction.

1 Connect the power cables to the monitor and to the PC500-F***.

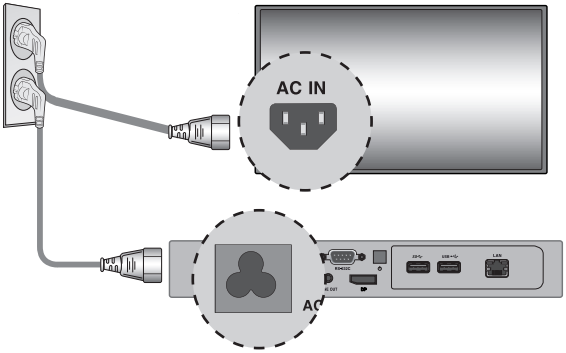

2 Connect the PC500-F*** to the monitor using the DP to HDMI adapter and the HDMI cable.

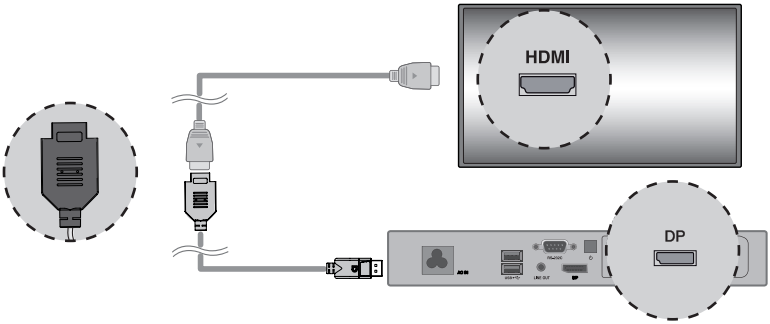

3 Connect PC500-F*** (OUT) to the monitor (IN) with an RS-232C cable.

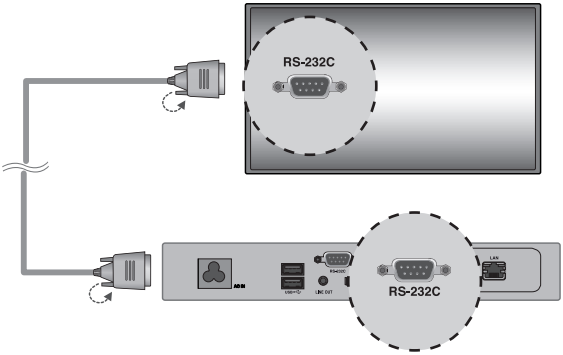

4 Connect a LAN cable to PC500-F***.

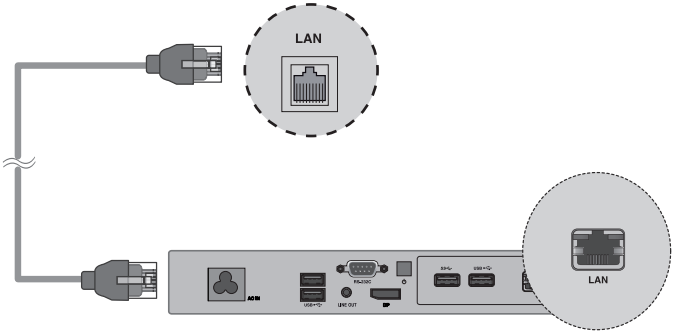

Attention

- The DP to HDMI adapter must be connected before the product is turned on or after the operating system has completely loaded.

Connecting/Disconnecting DP Audio Device in Windows

Connecting/Disconnecting DP Audio Device in Windows Embedded Standard 7 P

1	Select **Start > Control Panel > Hardware and Sound > Sound**.
2	Click the **Play** tap first. Right-click on the **Intel® Display Audio** or **2 - Realtek High Definition Audio** and select **Set as Default Device**, then click **OK** to connect the DP audio device or select Disable to disconnect it. ※ In order to change the audio devices, you may restart the computer.

Attention

- If an audio device is connected or removed while media content is played, you need to stop the content and play again.
- If a DP cable is removed from the PC500-F***, sound does not play. In addition, when the cable is reconnected, it may take time before sound plays again.

Connection to Multiple Monitors

Multiple monitors can be connected to a single PC500-F***. (The maximum number of monitors connected varies depending on the monitor type.) You can set the tile mode by connecting multiple monitors.

1. Connect the RS-232C Out port of the PC500-F*** to the RS-232C In port of the first monitor (SET ID 1).
2. Connect rest of the monitors using a RS-232C cable. (Be careful about input and output ports.)

**WS50, **LT55A

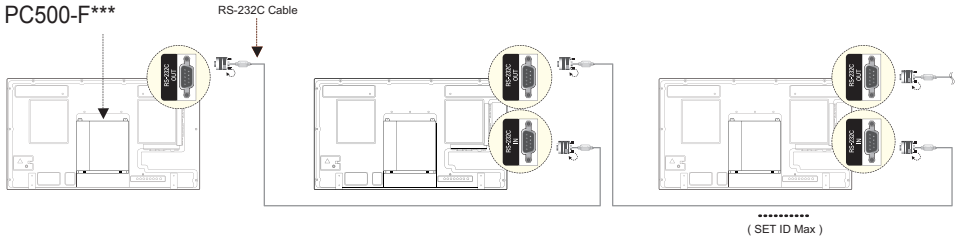

**WX50MF

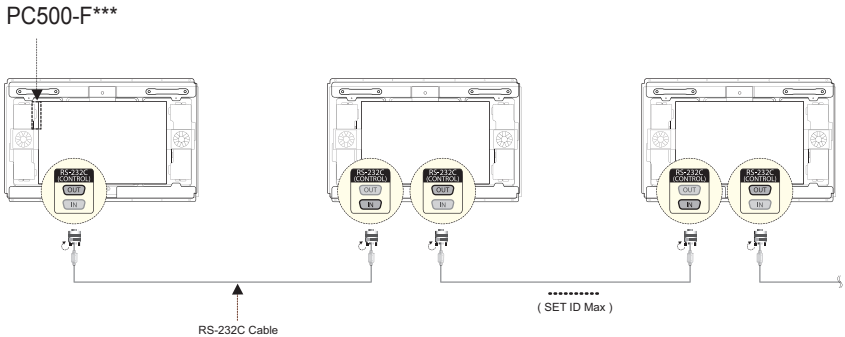

Attention

- You may want to purchase additional RS-232C cables to use several monitors together.
- You cannot connect multiple monitors using a DP cable.
- Refer to the owner's manual of the monitor for the SET ID Max. value.

Attention

- Shut down the system properly using the Windows Start menu. Otherwise, this may cause errors such as data loss, which will lead damage to the product.
- Avoid using the product in a closed environment which could prevent the flow of the air. Otherwise, this may increase the product temperature, which will prevent it from operating normally and affect the product life.
- Using converting devices, such as DP to HDMI adapter and HDMI to DVI cable, may cause compatibility issues.
- When connecting the PC500-F*** into **WS50, **LT55A or **WX50MF through the monitor docking port, set the monitor input to SuperSign.
- When connecting/removing the PC500-F*** into/from the monitor through the monitor docking port, make sure to unplug the power cord connected to monitor and PC500-F*** respectively.
- The following monitors support the connection through the monitor docking port.
  **WS50, **LT55A (LG Electronics)
  **WX50MF (LG Electronics)
- Disconnect the power cord first before moving or installing the product. Otherwise, this may result in electric shock.
- Make sure to reboot the PC500-F***, when connecting the PC500-F*** through the monitor docking port and using the Factory Reset function.
- Using wireless devices may cause a malfunction.

Limitations of Microsoft Windows Embedded Standard

The following are potential errors that may occur due to internal limitations of Microsoft Windows Embedded Standard, which is the OS of Mini-PC for Signage.

- If you press **Alt + Enter** on the DOS window, text other than English may be shown corrupted.
- If you use **Save As** function in the **Print** window, the menu window name will be displayed in English.
- When you move to submenu items (such as in the Control Panel), some may appear in English. (e.g., HyperTerminal, Regional and Language Options, Device Manager)

Frequently Asked Questions (FAQs)

Question	Answer
Where can I get a vaccine program?	This Mini PC comes packaged with the Windows program only. Please purchase a vaccine program separately for use.
The screen resolution is not adequate.	Check whether the screen resolution of Windows is set properly.
The edges of the image are cropped off.	For some models, you need to set the monitor input to PC mode. For more information, please refer to the owner's manual of your monitor.
I want to use MST (Multi Stream Transport) in the PC500.	- To use MST, you need the latest BIOS and video driver. (Supported versions: BIOS Version PC500F05 or later and video driver v13.302 or later) - PC500 has two DP with HBR2 ports. MST does not support these two ports simultaneously. - To use MST, you need a monitor that supports MST and cables certified for DisplayPort that support HBR2 or later. - When four or more FHD videos are being played simultaneously, video performance may be reduced depending on the operating environment of MST (i.e., bit rate, encoding method, video player, etc.).

Unified Codecs

You need to install codecs required to play videos. Video files may require different codecs for playing. Websites to download unified codecs are listed below:

- *http://www.codecguide.com*
- *http://shark007.net*
- *http://www.free-codecs.com*

Note

- The websites above are not related to LG Electronics, and are subject to change.
- Visit their websites for details about the codec license.
- Make sure that a codec required to play the content you require is included in the download package before you install it.
- Avoid duplicate installations of a codec package.
- If you want to install a different code package, uninstall the previous codec first.

Network Setting

There are various network connection methods depending upon the specifications of your carrier or Internet service provider.

Attention

- Use a standard LAN cable (CAT5 or higher with a RJ45 connector). LG Electronics is not responsible for the Internet disconnection due to problems with or malfunctions of other connected devices. LG Electronics is not liable for any problems related to the Internet connection.

Make sure to read the Important Precautions before using the product.
Keep the Owner's Manual(CD) in an accessible place for furture reference.
The model and serial number of the SET is located on the back and one side of the SET. Record it below should you ever need service.

MODEL _____

SERIAL _____

WARNING - This is a class A product. In a domestic environment this product may cause radio interference in which case the user may be required to take adequate measures.

Temporary noise is normal when powering ON or OFF this device.