LG

*MFL05813106260 5REV01*

**OLED48B6***
**OLED55B6*** **OLED77B6***
**OLED65B6*** **OLED83B6***





x 1

www.lg.com

PDF

**48/55/65”**

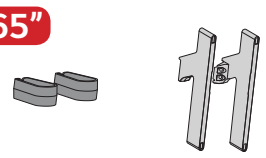

a x 4 (M4 x L20)

**77”**

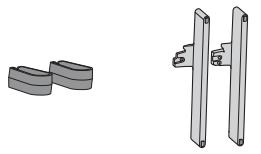

a x 6 (M4 x L20)

**83”**

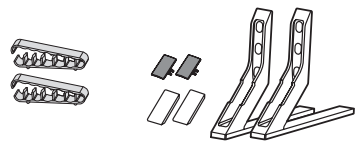

b x 4 (M4 x L10.5)

**48”**

1

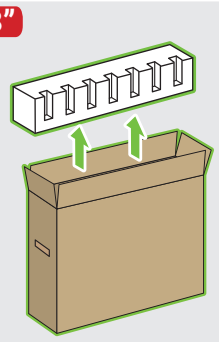

**55/65/77”**

1

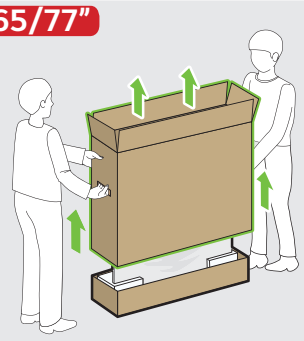

**83”**

1

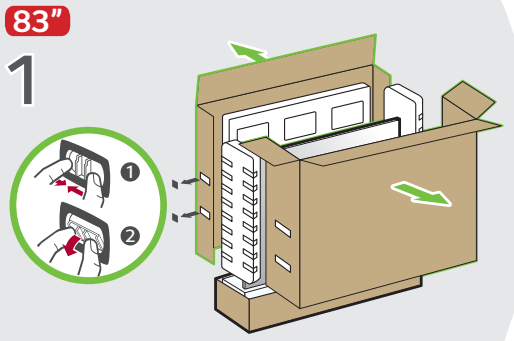

**48/55/65/77/83”**

2

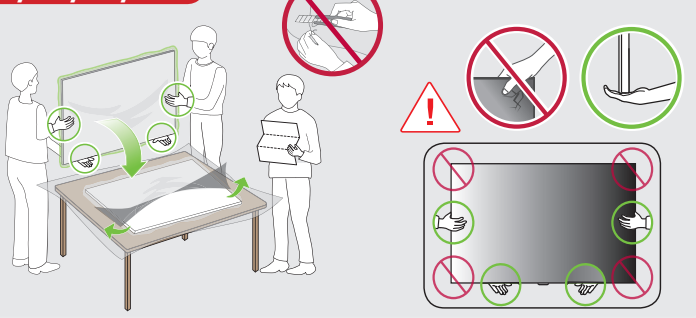

**48/55/65”**

1

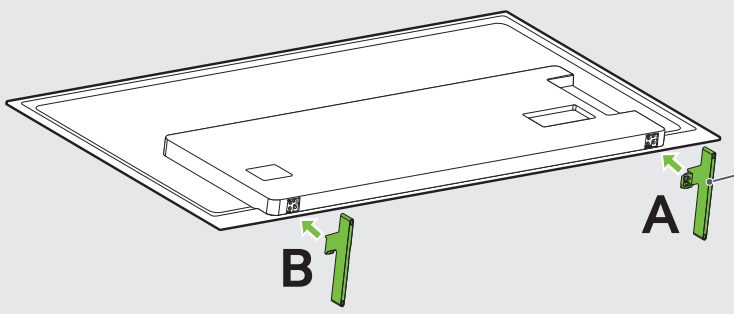

1

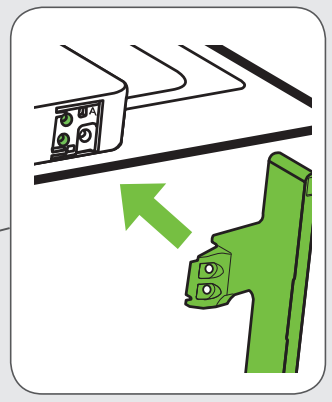

a x 4

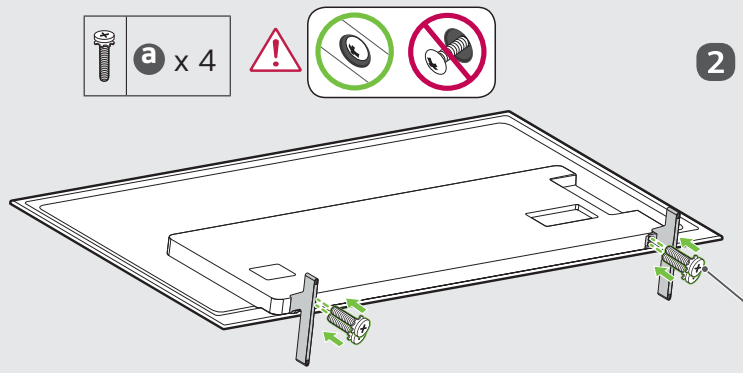

2

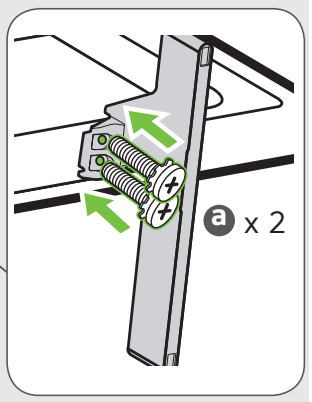

a x 2

**77”**

1

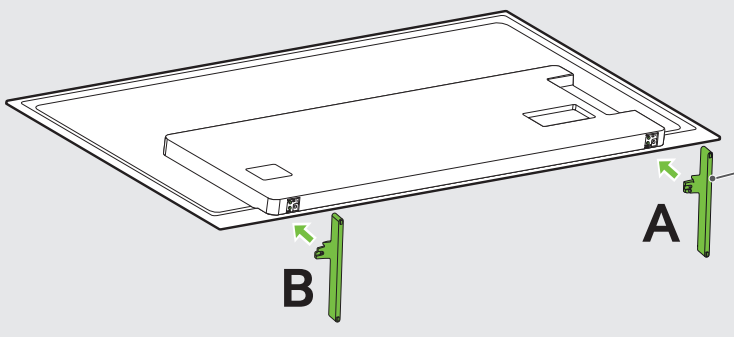

1

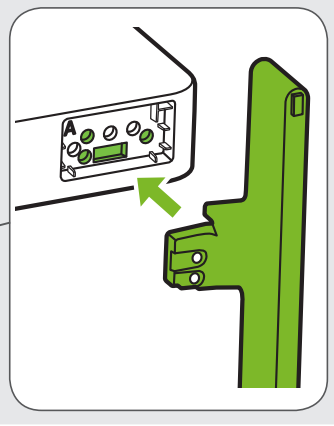

a x 6

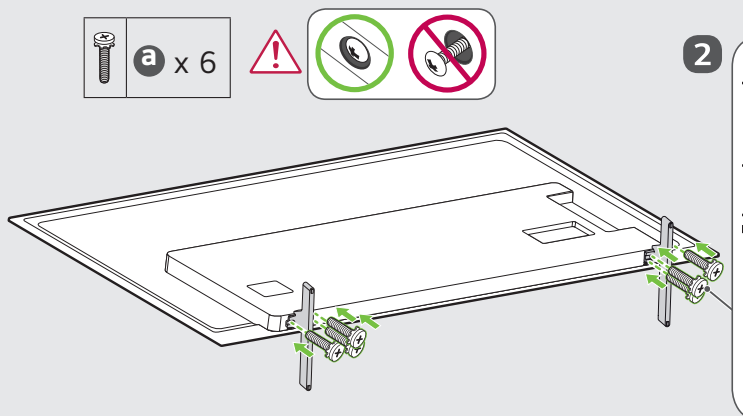

2

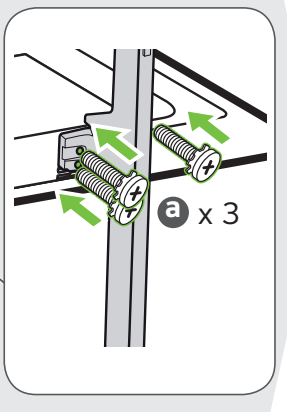

a x 3

**48/55/65/77”**

2

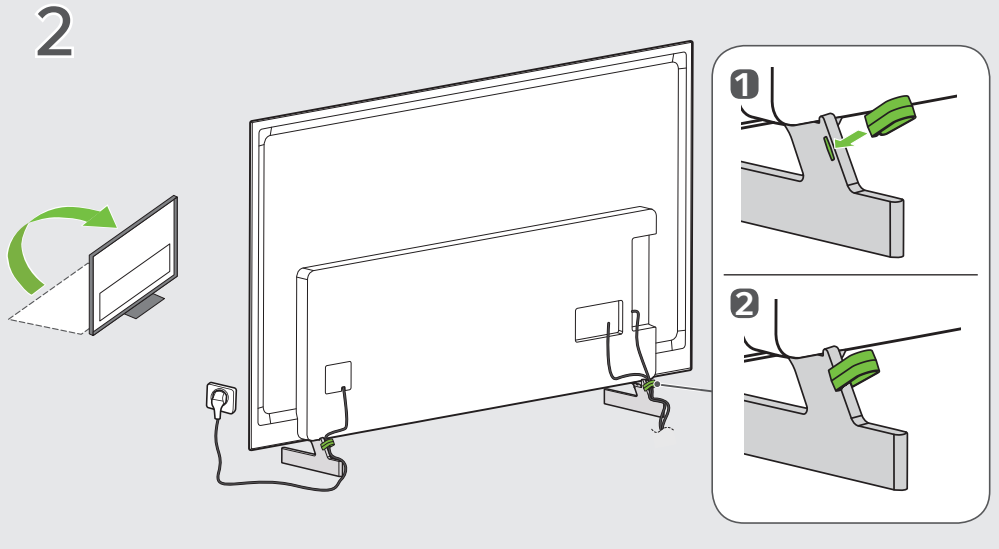

**83”**

1

b x 4

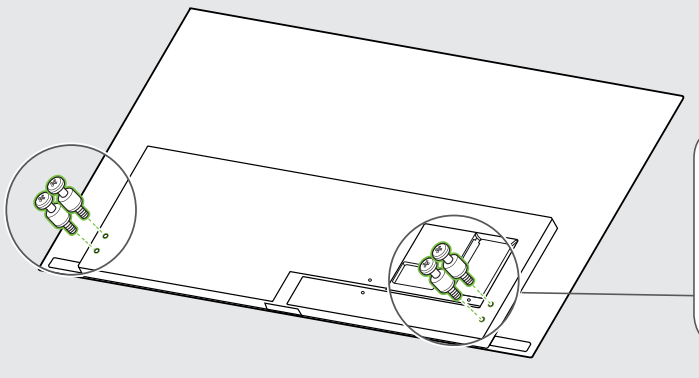

b x 2

2

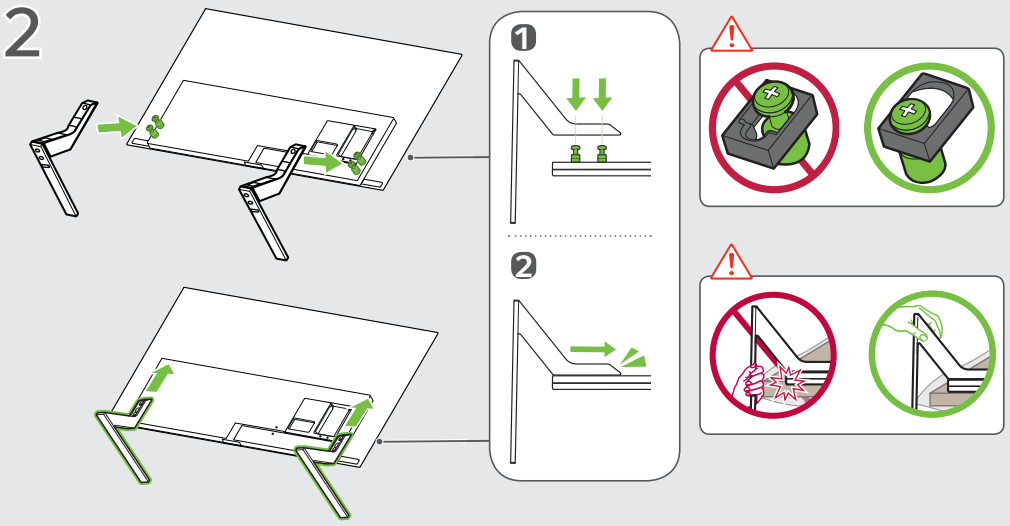


3

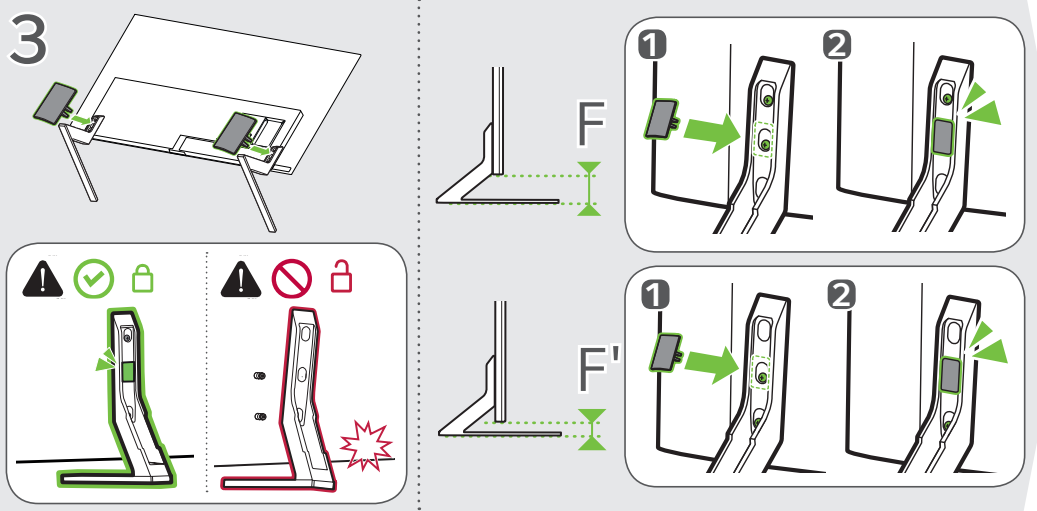


4

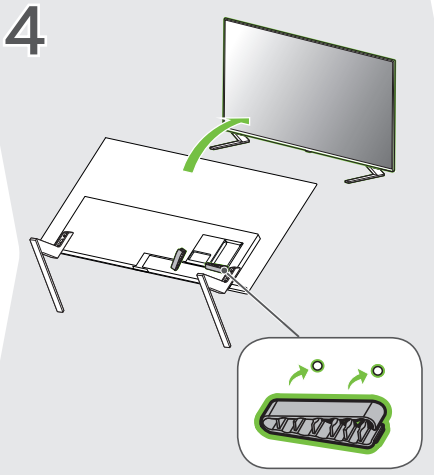

5

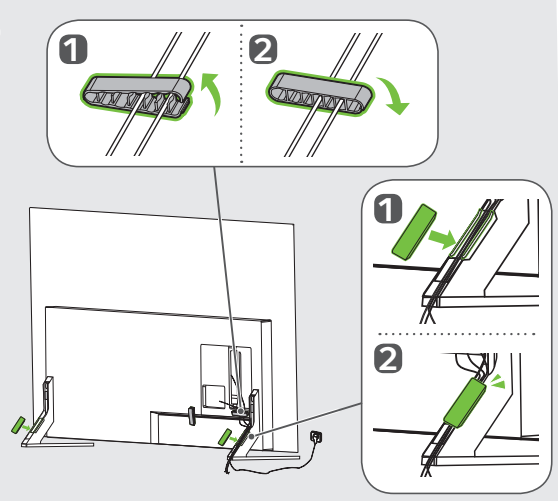

48/55/65/77/83”

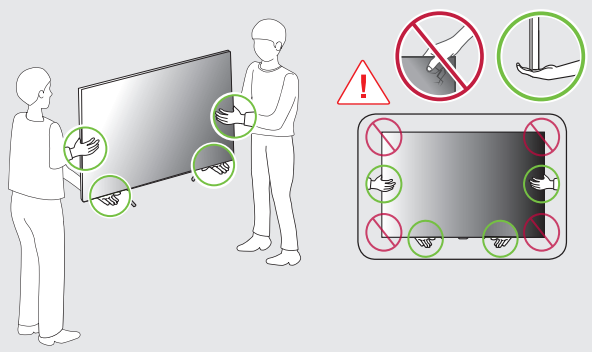

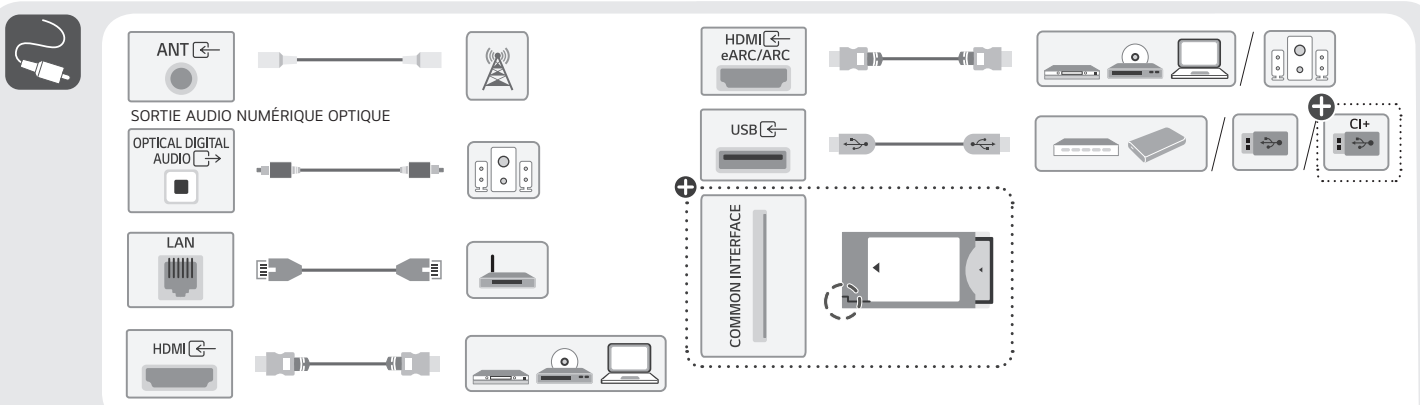


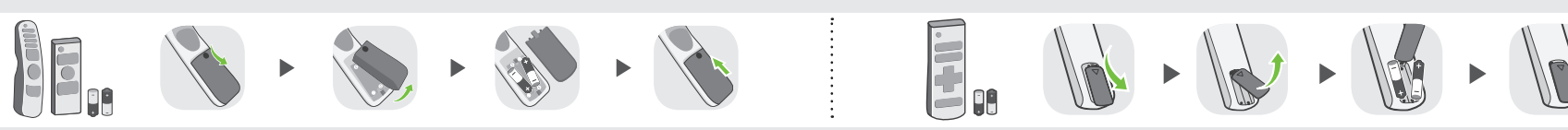

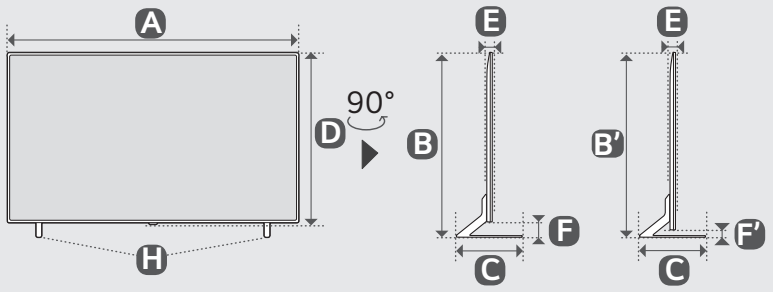


kg

| | mm (inches / pulgadas / po / pol.) | | | | | | | | kg (lbs / libras / lb) | |
|---|---|---|---|---|---|---|---|---|---|---|
| | A | B | B' | C | D | E | F | F' | G | G - H |
| **OLED48B6*** | 1 070 (42.1) | 688 (27.0) | - | 218 (8.5) | 620 (24.4) | 45.9 (1.8) | 68 (2.6) | - | 11.7 (25.7) | 11.5 (25.3) |
| **OLED55B6*** | 1 228 (48.3) | 776 (30.5) | - | 218 (8.5) | 708 (27.8) | 45.9 (1.8) | 68 (2.6) | | 14.5 (31.9) | 14.3 (31.5) |
| **OLED65B6*** | 1 449 (57.0) | 900 (35.4) | - | 218 (8.5) | 832 (32.7) | 45.9 (1.8) | 68 (2.6) | | 17.3 (38.1) | 17.1 (37.6) |
| **OLED77B6*** | 1 719 (67.6) | 1 057 (41.6) | - | 268 (10.5) | 989 (38.9) | 50.9 (2.0) | 68 (2.6) | | 23.3 (51.3) | 22.9 (50.4) |
| **OLED83B6*** | 1 842 (72.5) | 1 144 (45.0) | 1 084 (42.6) | 300 (11.8) | 1 055 (41.5) | 52.9 (2.0) | 89 (3.5) | 29 (1.1) | 27.7 (61.0) | 26.7 (58.8) |

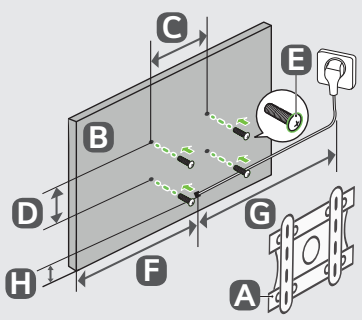


| A | B | E | mm (inches / pulgadas / po / pol.) | | | |
|---|---|---|---|---|---|---|
| | | | C x D | F | G | H |
| OLW480B | **OLED48B6*** | M6 | 300 x 200 (11.8 x 7.8) | 119 (4.6) | ≧1.5 m (59.0) inches | 120 (4.7) |
| | **OLED55B6*** | | | 159 (6.2) | | 123 (4.8) |
| | **OLED65B6*** | | | 269 (10.5) | | 123 (4.8) |
| | **OLED77B6*** | | | 277 (10.9) | | 75 (2.9) |
| WB24GCB | **OLED83B6*** | | 400 x 400 (15.7 x 15.7) | 896 (35.2) | | 114 (4.4) |

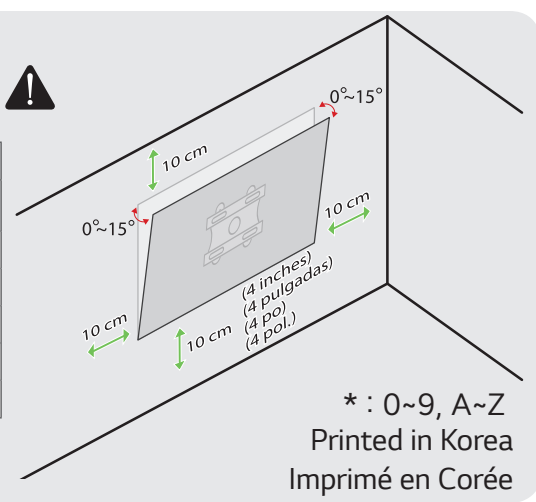


* : 0~9, A~Z

Printed in Korea

Imprimé en Corée