INSTALLATION MANUAL

AIR-TO-WATER HEAT PUMP



Please read this installation manual completely before installing the product.

Original instruction

EN	**ENGLISH**	**IT**	**ITALIANO**	**ES**	**ESPAÑOL**	**FR**	**FRANÇAIS**
DE	**DEUTSCH**	**EL**	**ΕΛΛΗΝΙΚΑ**	**CZ**	**ČEŠTINA**	**NL**	**NEDERLANDS**
PL	**POLSKI**	**RO**	**ROMÂNĂ**	**PT**	**PORTUGUÊS**	**HU**	**MAGYAR**
BG	**БЪЛГАРСКИ**	**SR**	**SRPSKI**	**HR**	**HRVATSKI**	**SL**	**SLOVENŠČINA**
DA	**DANSK**						

Outdoor Unit	Indoor Unit
HM513MR.UXC0	PHCML0 ENCXLEU

MFL68681881
Rev.00_010926

www.lg.com

Copyright © 2026 LG Electronics Inc. All Rights Reserved.

TABLE OF CONTENTS

SAFETY INSTRUCTIONS 5
READ ALL INSTRUCTIONS BEFORE USE 5
Safety Messages 5
Notes for Flammable Refrigerant 6
DELIVERED PARTS 21
GENERAL INFORMATION 22
Model information 22
Parts and Dimensions 24
Control Parts 26
Control Panel 27
Typical Installation Example 28
Cycle Diagram 29
Wiring Diagram 30
INSTALLATION 32
Individual Installation Space 32
Airborne Noise Emission 33
Installation at Seaside 34
Lifting Method 35
Location Of The Anchor Bolts 36
Foundation for Installation 37
Seasonal wind and cautions in winter 38
Water pipe connection 40
Frost protection by antifreeze valve 46
INSTALLATION OF INDOOR UNIT 49
Conditions where Indoor Unit is Installed 49
ELECTRICAL WIRING 52
Electric specification 54
Control box and connecting position of wiring 55
Communication and Power Cables 56
Separation of communication and power cables 56
Wiring of main power supply and equipment capacity 57
Field Wiring 58
WATER MANAGEMENT 68
Water pipe side strainer 68
Actions for problems in the test operation 68
Plate type heat exchanger maintenance 69
Daily inspection management 70
ACCESSORIES INSTALLATION 75
Before Installation 78
Thermostat 78

2nd Circuit 81
3rd Party Backup heater 84
3rd Party Boiler 87
3rd Party Controller 88
Meter Interface 89
DHW Tank 91
Solar Thermal Kit 96
Dry Contact 98
External Controller - Setting up programmable digital input operation 100
Solar pump 101
External pump 102
Main pump 103
Wi-Fi Modem 104
Energy State 105
Digital Input for energy saving (ESS, Smart Grid) 106
2Way Valve 108
3Way Valve(A) 109
Final check 110

CONFIGURATION 111
DIP Switch Setting 111
High Static Pressure Compensation mode 115
Emergency Independent Operation Mode 116
Night Low Noise Function 117
Snow removal & rapid defrost 118
Compressor Input Current Limit 119
Overall Defrost Operating in Low temperature (Heating) 120
Base pan Heater operation 121

SERVICE SETTING 122
How to enter service setting 122
Service setting 122
Service contact 123

INSTALLER SETTING 124
How to enter installer setting 124
Installer setting 125
Installer settings in detail 147
General – Alternating defrost 156
Auto mode - Seasonal auto temp. 157
Domestic hot water - DHW temperature settings 158
Domestic hot water - Thermal disinfection 159
Domestic hot water - DHW heating duration 160
Domestic hot water - DHW electric re-heating 160
Domestic hot water - DHW re-circulation 161

Solarthermal system - Solar collector operating range....162
Solarthermal system - Solar tank temp. limit....162
Solarthermal system - Solarthermal dT....162
Service - Pump test run....163
Service - Actuator test - Test mode....163
Service - Actuator test - Pump test....163
Service - Actuator test - Valve test....163
Service - Frost protection temperature....164
Connectivity - Modbus address(HEX)....165
Connectivity - CN_EXT....169
Connectivity - 3rd party boiler....170
Connectivity - Energy state....172

COMMISSIONING....173
Check List before Starting Operation....173
Starting Operation....175
Starting Operation flow chart....175
Trouble shooting....176
Self-Diagnosis Function....179

ANNEX....183

SAFETY INSTRUCTIONS

READ ALL INSTRUCTIONS BEFORE USE

The following safety guidelines are intended to prevent unforeseen risks or damage from unsafe or incorrect operation of the appliance.

Safety Messages

⚠ This symbol is displayed to indicate matters and operations that can cause risk.
Read the part with this symbol carefully and follow the instructions in order to avoid risk.

⚠ WARNING

This indicates that the failure to follow the instructions can cause serious injury or death.

⚠ CAUTION

This indicates that the failure to follow the instructions can cause the minor injury or damage to the product.

Notes for Flammable Refrigerant

The following symbols are displayed on units.



This appliance is filled with flammable refrigerant (for R32)



This symbol indicates that the Installation Manual should be read carefully.



This symbol indicates that service personnel should be handling this equipment with reference to the Installation Manual.



This symbol indicates that information is available in the Owner's Manual or Installation Manual.

⚠ WARNING

Installation

- Do not use a defective or underrated circuit breaker. Use this appliance on a dedicated circuit.
  - There is risk of fire or electric shock.
- For electrical work, contact the dealer, seller, a qualified electrician, or an Authorized Service Center.
  - There is risk of fire or electric shock.
- Always ground the unit.
  - There is risk of fire or electric shock.
- Install the panel and the cover of control box securely.
  - There is risk of fire or electric shock.
- Always install a dedicated circuit and breaker.
  - Improper wiring or installation may cause fire or electric shock.

- Use the correctly rated breaker or fuse.
  - There is risk of fire or electric shock.
- Do not modify or extend the power cable.
  - There is risk of fire or electric shock.
- Do not install, remove, or reinstall the unit by yourself (customer).
  - There is risk of fire, electric shock, explosion, or injury
- For antifreeze, always contact the dealer or an authorized service center.
  - Almost the antifreeze is a toxic product.
- For installation, always contact the dealer or an authorized Service Center.
  - There is risk of fire, electric shock, explosion, or injury.
- Do not install the unit on a defective installation stand.
  - It may cause injury, accident, or damage to the unit.
- Be sure the installation area does not deteriorate with age.
  - If the base collapses, the unit could fall with it, causing property damage, unit failure, and personal injury.
- Do not install the water pipe system as Open loop type.
  - It may cause failure of unit.
- Use a vacuum pump or inert (nitrogen) gas when doing leakage test or purging air. Do not compress air or oxygen and do not use flammable gases.
  - There is the risk of death, injury, fire or explosion.
- Make sure the connected condition of connector in product after maintenance.
  - Otherwise, it may cause product damage.
- Do not touch leaked refrigerant directly.
  - There is risk of frostbite.
- Copper in contact with refrigerants shall be oxygen-free or deoxidized, for example Cu-DHP as specified in EN 12735-1 and EN 12735-2.

- Compliance with national gas regulations shall be observed.
- Refrigerant tubing shall be protected or enclosed to avoid damage.
- The installation of pipe-work shall be kept to a minimum.
- A brazed, welded, or mechanical connection shall be made before opening the valves to permit refrigerant to flow between the refrigerating system parts. A vacuum valve shall be provided to evacuate the interconnecting pipe and/or any uncharged refrigerating system part.
- A vacuum valve shall be provided to evacuate the interconnecting pipe and/or any uncharged refrigerating system part.
- Any person who is involved with working on or breaking into a refrigerant circuit should hold a current valid certificate from an industry-accredited assessment authority, which authorises their competence to handle refrigerants safely in accordance with an industry recognised assessment specification.
- Do not use means to accelerate the defrosting process or to clean, other than those recommended by the manufacturer.
- Do not pierce or burn.
- Be aware that refrigerants might not contain an odour.
- Dismantling the unit, treatment of the refrigerant oil and eventual parts should be done in accordance with local and national standards.
- Flexible refrigerant connectors (such as connecting lines between the indoor and outdoor unit) that may be displaced during normal operations shall be protected against mechanical damage.
- Pipe-work shall be securely mounted and guarded from physical damage.

- Mechanical connections (mechanical connectors or flared joints) shall be accessible for maintenance purposes.
- Cabling
  Cabling will not be subject to wear, corrosion, excessive pressure, vibration, sharp edges or any other adverse environmental effects. The check shall also take into account the effects of aging or continual vibration from sources such as compressors or fans.
- Always check for gas (refrigerant) leakage before installation or repair of unit by using the leak detector (leak detector must be suitable for R32).
  - There is risk of explosion or fire and failure of unit.

Operation

- Take care to ensure that power cable could not be pulled out or damaged during operation.
  - There is risk of fire or electric shock.
- Do not place anything on the power cable.
  - There is risk of fire or electric shock.
- Do not plug or unplug the power supply plug during operation.
  - There is risk of fire or electric shock.
- Do not touch (operate) the unit with wet hands.
  - There is risk of fire or electric shock.
- Do not place a heater or other appliances near the power cable.
  - There is risk of fire or electric shock.
- Do not allow water to run into electric parts.
  - There is risk of fire, failure of the unit, or electric shock.
- Do not store or use flammable gas or combustibles near the unit.
  - There is risk of fire or failure of unit.

- Do not use the unit in a tightly closed space for a long time.
  - It may cause damage to the unit.
- When flammable gas leaks, turn off the gas and open a window for ventilation before turning the unit on.
  - There is risk of explosion or fire.
- If strange sounds, or smell or smoke comes from unit, turn the breaker off or disconnect the power supply cable.
  - There is risk of electric shock or fire.
- Stop operation and close the window in storm or hurricane. If possible, remove the unit from the window before the hurricane arrives.
  - There is risk of property damage, failure of unit, or electric shock.
- Do not open the front cover of the unit while operation. (Do not touch the electrostatic filter, if the unit is so equipped.)
  - There is risk of physical injury, electric shock, or unit failure.
- Do not touch any electric part with wet hands. you should be power off before touching electric part.
  - There is risk of electric shock or fire.
- Do not touch refrigerant pipe and water pipe or any internal parts while the unit is operating or immediately after operation.
  - There is risk of burns or frostbite, personal injury.
- If you touch the pipe or internal parts, you should be wear protection or wait time to return to normal temperature.
  - Otherwise , it may cause burns or frostbite, personal injury.
- Turn the main power on 6 hours ago before the product starting operation.
  - Otherwise, it may cause compressor damage.
- Do not touch electric parts for 10 minutes after main power off.
  - There is risk of physical injury, electric shock.
- The inside heater of product may operate during stop mode. It is intended to protect the product.

- Be careful that some part of the control box are hot.
  - There is risk of physical injury or burns.
- When the unit is soaked (flooded or submerged), contact an Authorized Service Center.
  - There is risk of fire or electric shock.
- Be cautious that water could not be poured to the unit directly.
  - There is risk of fire, electric shock, or unit damage.
- Ventilate the unit from time to time when operating it together with a stove, etc.
  - There is risk of fire or electric shock.
- Turn the main power off when cleaning or maintaining the unit.
  - There is risk of electric shock.
- Take care to ensure that nobody could step on or fall onto the unit.
  - This could result in personal injury and unit damage.
- If the unit is not used for long time, we strongly recommend not to switch off the power supply to the unit.
  - There is risk of water freezing.
- The appliance shall be stored in a well-ventilated area where the room size corresponds to the room area as specified for operation.
- The appliance shall be stored in a room without continuously operating open flames (for example an operating gas appliance) and ignition sources (for example an operating electric heater).
- The appliance shall be stored so as to prevent mechanical damage from occurring.
- Servicing shall only be performed as recommended by the equipment manufacturer. Maintenance and repair requiring the assistance of other skilled personnel shall be carried out under the supervision of the person competent in the use of flammable refrigerants.

- When mechanical connectors are reused indoors, sealing parts shall be renewed. When flared joints are reused indoors, the flare part shall be re-fabricated.
- Periodic(more than once/year) cleaning of the dust or salt particles stuck on the heat exchangers by using water.
- Keep any required ventilation openings clear of obstruction.

Safety Instructions for the Service

- Checks to the area
  Prior to beginning work on systems containing flammable refrigerants, safety checks are necessary to ensure that the risk of ignition is minimised. For repair to the refrigerating system, the following precautions shall be complied with prior to conducting work on the system.
- Work procedure
  Work shall be undertaken under a controlled procedure so as to minimise the risk of a flammable gas or vapour being present while the work is being performed.
- General work area
  All maintenance staff and others working in the local area shall be instructed on the nature of work being carried out. Work in confined spaces shall be avoided.
- Checking for presence of refrigerant
  The area shall be checked with an appropriate refrigerant detector prior to and during work, to ensure the technician is aware of potentially flammable atmospheres.
  Ensure that the leak detection equipment being used is suitable for use with flammable refrigerants, i.e. non-sparking, adequately sealed or intrinsically safe.

- Presence of fire extinguisher
  If any hot work is to be conducted on the refrigerating equipment or any associated parts, appropriate fire extinguishing equipment shall be available to hand. Have a dry powder or CO2 fire extinguisher adjacent to the charging area.
- No ignition sources
  No person carrying out work in relation to a refrigerating system which involves exposing any pipe work shall use any sources of ignition in such a manner that it may lead to the risk of fire or explosion.
  All possible ignition sources, including cigarette smoking, should be kept sufficiently far away from the site of installation, repairing, removing and disposal, during which flammable refrigerant can possibly be released to the surrounding space. Prior to work taking place, the area around the equipment is to be surveyed to make sure that there are no flammable hazards or ignition risks. “No Smoking” signs shall be displayed.
- Ventilated area
  Ensure that the area is in the open or that it is adequately ventilated before breaking into the system or conducting any hot work. A degree of ventilation shall continue during the period that the work is carried out. The ventilation should safely disperse any released refrigerant and preferably expel it externally into the atmosphere.
- Detection of flammable refrigerants
  Under no circumstances shall potential sources of ignition be used in the searching for or detection of refrigerant leaks.
  A halide torch (or any other detector using a naked flame) shall not be used.

- Detection of flammable refrigerants
  Under no circumstances shall potential sources of ignition be used in the searching for or detection of refrigerant leaks.
  A halide torch (or any other detector using a naked flame) shall not be used.

- Leak detection methods
  The following leak detection methods are deemed acceptable for systems containing flammable refrigerants.
  Electronic leak detectors shall be used to detect flammable refrigerants, but the sensitivity may not be adequate, or may need re-calibration. (Detection equipment shall be calibrated in a refrigerant-free area.) Ensure that the detector is not a potential source of ignition and is suitable for the refrigerant used.
  Leak detection equipment shall be set at a percentage of the LFL of the refrigerant and shall be calibrated to the refrigerant employed and the appropriate percentage of gas (25 % maximum) is confirmed.
  Leak detection fluids are also suitable for use with most refrigerants but the use of detergents containing chlorine shall be avoided as the chlorine may react with the refrigerant and corrode the copper pipe-work.

NOTE

Examples of leak detection fluids are

- Bubble method
- Fluorescent method agents

If a leak is suspected, all naked flames shall be removed/extinguished.
If a leakage of refrigerant is found which requires brazing, all of the refrigerant shall be recovered from the system, or isolated (by means of shut off valves) in a part of the system remote from the leak. Removal of refrigerant shall be according to removal and evacuation procedure.

- Charging procedures

  In addition to conventional charging procedures, the following requirements shall be followed.

  - Ensure that contamination of different refrigerants does not occur when using charging equipment. Hoses or lines shall be as short as possible to minimise the amount of refrigerant contained in them.
  - Cylinders shall be kept in an appropriate position according to the instruction.
  - Ensure that the refrigeration system is earthed prior to charging the system with refrigerant.
  - Label the system when charging is complete (if not already).
  - Extreme care shall be taken not to overfill the refrigerating system. Prior to recharging the system, it shall be pressure tested with the appropriate purging gas.
    The system shall be leak-tested on completion of charging but prior to commissioning. A follow up leak test shall be carried out prior to leaving the site.

- Recovery

  When removing refrigerant from a system, either for servicing or decommissioning, it is recommended good practice that all refrigerants are removed safely.
  When transferring refrigerant into cylinders, ensure that only appropriate refrigerant recovery cylinders are employed.
  Ensure that the correct number of cylinders for holding the total system charge are available.
  All cylinders to be used are designated for the recovered refrigerant and labelled for that refrigerant (i.e. special cylinders for the recovery of refrigerant).
  Cylinders shall be complete with pressure relief valve and associated shut-off valves in good working order.

Empty recovery cylinders are evacuated and, if possible, cooled before recovery occurs.
The recovery equipment shall be in good working order with a set of instructions concerning the equipment that is at hand and shall be suitable for the recovery of flammable refrigerants. In addition, a set of calibrated weighing scales shall be available and in good working order.
Hoses shall be complete with leak-free disconnect couplings and in good condition. Before using the recovery machine, check that it is in satisfactory working order, has been properly maintained and that any associated electrical components are sealed to prevent ignition in the event of a refrigerant release. Consult manufacturer if in doubt.
The recovered refrigerant shall be returned to the refrigerant supplier in the correct recovery cylinder, and the relevant Waste Transfer Note arranged.
Do not mix refrigerants in recovery units and especially not in cylinders. If compressors or compressor oils are to be removed, ensure that they have been evacuated to an acceptable level to make certain that flammable refrigerant does not remain within the lubricant.
The evacuation process shall be carried out prior to returning the compressor to the suppliers.
Only electric heating to the compressor body shall be employed to accelerate this process. When oil is drained from a system, it shall be carried out safely.

- Refrigerant removal and circuit evacuation
  When breaking into the refrigerant circuit to make repairs – or for any other purpose – conventional procedures shall be used. However, for flammable refrigerants it is important that best practice is followed since flammability is a consideration.

The following procedure shall be adhered to:
– Safely remove refrigerant following local and national regulations;
– Evacuate;
– Purge the circuit with inert gas (optional for A2L);
– Evacuate (optional for A2L);
– Continuously flush with inert gas when using flame to open circuit;
– Open the circuit.

The refrigerant charge shall be recovered into the correct recovery cylinders.
The manufacturer shall specify the inert gases that can be used. Compressed air or oxygen shall not be used for purging refrigerant systems.

NOTE

An example of an inert gas is dry nitrogen.

Purging of the refrigerant circuit shall be achieved by breaking the vacuum in the system with inert gas and continuing to fill until the working pressure is achieved, then venting to atmosphere, and finally pulling down to a vacuum.
This process shall be repeated until no refrigerant is within the system.
The system shall be vented down to atmospheric pressure to enable work to take place.
Ensure that the outlet of the vacuum pump is not close to any potential ignition sources and that ventilation is available.

⚠ CAUTION

Installation

- Always check for gas (refrigerant) leakage after installation or repair of unit.
  - Low refrigerant levels may cause failure of unit.
- Keep level even when installing the unit.
  - To avoid vibration or water leakage.
- Use two or more people to lift and transport the unit.
  - Avoid personal injury.
- In order to avoid a hazard due to inadvertent resetting of the thermal cut-out, this appliance must not be supplied through an external switching device, such as a timer, or connected to a circuit that is regularly switched on and off by the utility.
- Do not install the unit in potentially explosive atmospheres.
- The water may drip from the discharge pipe of the pressure-relief device and that this pipe must be left open to the atmosphere.
- The pressure-relief device is to be operated regularly to remove lime deposits and to verify that it is not blocked.
- A discharge pipe connected to the pressure-relief device is to be installed in a continuously downward direction and in a frost-free environment.
- Connect the water for filling or refilling the heating system as specified by EN 1717/EN 61770 to avoid contamination of drinking water by return flow.

Operation

- Do not use the unit for special purposes, such as preserving foods, works of art, etc.
  - There is risk of damage or loss of property.

- Use a soft cloth to clean. Do not use harsh detergents, solvents, etc.
  - There is risk of fire, electric shock, or damage to the plastic parts of the unit.
- Do not step on or put anything on the unit.
  - There is risk of personal injury and failure of unit.
- Use a firm stool or ladder when cleaning or maintaining the unit.
  - Be careful and avoid personal injury.
- Do not turn on the breaker or power under condition that front panel cabinet, top cover, control box cover are removed or opened.
  - Otherwise it may cause fire, electric shock, explosion or death.
- The appliance shall be disconnected from its power source during service and when replacing parts.
- Means for disconnection must be incorporated in the fixed wiring in accordance with the wiring rules.
- The Installation kit supplied with the appliance are to be used and that old Installation kit should not be reused.
- If the supply cord is damaged, it must be replaced by the manufacturer, its service agent or similarly qualified persons in order to avoid a hazard. Installation work must be performed in accordance with the national wiring standards by authorized personnel only.
- This equipment shall be provided with a supply conductor complying with the national regulation.
- The instructions for service to be done by specialized personnel, mandated by the manufacturer or the authorized representative may be supplied in only one Community language which the specialized personnel understand.

- This appliance is not intended for use by persons (including children) with reduced physical, sensory or mental capabilities or lack of experience and knowledge, unless they have been given supervision or instruction concerning use of the appliance by a person responsible for their safety. Children should be supervised to ensure that they do not play with the appliance.

DELIVERED PARTS

Before starting installation, please make it sure that all parts are found inside the product box.

Indoor Unit Box

Item	Image	Quantity
Indoor Unit	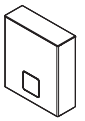	1
Installation Sheet		1
Cascade Inlet Temperature Sensor		1
Cascade Outlet Temperature Sensor		1
Installation Manual (1Sheet)		1
Owner's / Installation manual (Simple)		1
Sensor Holder		2
Sensor Connector		2

Outdoor Unit Box

Item	Image	Quantity
Outdoor Unit	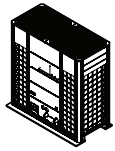	1

GENERAL INFORMATION

Model information

Additional information about all possible combinations including Energy labels and ErP datasheets can be found on following website:
https://www.lg.com/global/support/cedoc/cedoc

NOTE

Search for outdoor unit's model name on that website.

Operating condition

- Maximum operating temperature of water : *65°C
- Minimum operating temperature of water : 5°C
- Maximum inlet water pressure : 1MPa
- Minimum inlet water pressure : 0.03 MPa
- Maximum operating temperature of air (Outdoor) : 48°C
- Minimum operating temperature of air (Outdoor) : -25°C

* Above 60 °C operation is available only when the heater is Operating (Backup Heater & Booster Heater)

Buyer Model Name

Outdoor unit

Refrigerant	No.							
	1	2	3	4	5	6	7	8
R32	H	M	51	3	M	R	-	UXC0

No.	Signification
1	Air-to-Water-Heat Pump
2	Classification - M : Monobloc
3	Heating Capacity - E.g) 51 kW '51'
4	Electrical ratings - 3 : 3Ø 380-415 V~ 50 Hz
5	Leaving Water Combination - M : Middle Temperature
6	Refrigerant - R : R32
7	Function - X : Models for specific customers
8	Chassis Name - UXC0 : UXC Chassis

Indoor unit

Refrigerant	No.										
	1	2	3	4	5	6	7	8	9	10	11
R32	P	H	C	ML	0	-	-	-	-	-	-

No.	Signification
1	P : Part or Accessory
2,3	HL : Heating AWHP Accessory kit
	HC : Heating AWHP Control KIT
4	T : Sanitary Tank
	L : Solar Thermal
	S : Single unit SL : Single Large unit M : Cascade unit ML : Cascade Large unit
5	In order of performance, core parts, and development in case of change (August 2010, starting from 0)

Factory Model Name

Outdoor unit

Refrigerant	No.							
	1	2	3	4	5	6	7	8
R32	Z	H	B	W	51	8	A	0

No.	Signification
1	Z : R32
2	Air-to-Water-Heat Pump
3	Classification - B : Monobloc
4	W : DC Inverter Heat pump
5	51 : 51kW
6	8 : 3Ø 380~415V~ 50Hz
7	A : General heating heat pump
8	Series number

Indoor unit

Refrigerant	No.								
	1	2	3	4	5	6	7	8	9
R32	P	H	C	ML	0	-	-	-	-

No.	Signification
1	P : Part or Accessory
2,3	HL : Heating AWHP Accessory kit
	HC : Heating AWHP Control KIT
4	T : Sanitary Tank
	L : Solar Thermal
	S : Single unit SL : Single Large unit M : Cascade unit ML : Cascade Large unit
5	In order of performance, core parts, and development in case of change (August 2010, starting from 0)

Parts and Dimensions

Indoor Unit

(Unit : mm)

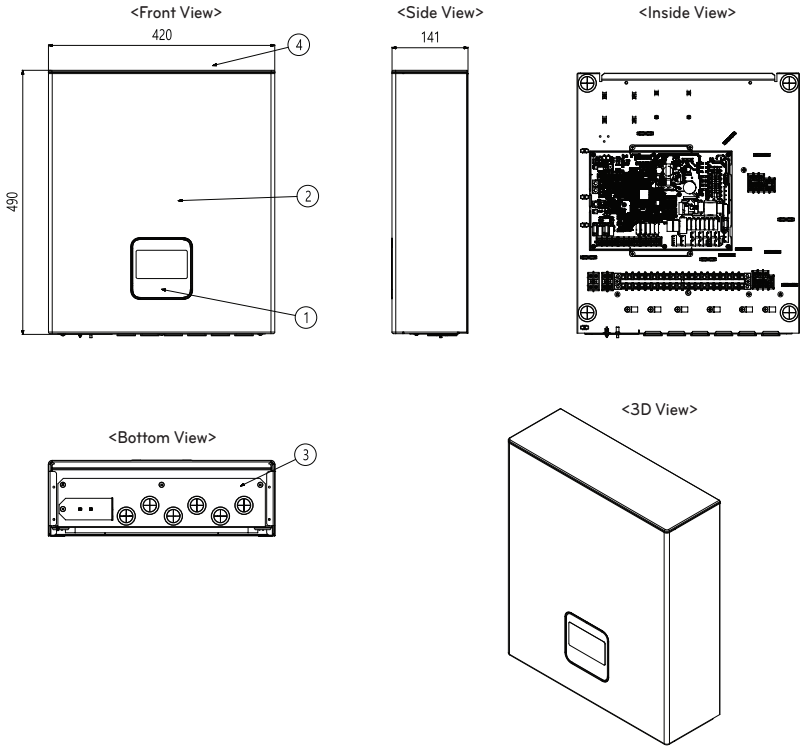

* The feature may be vary according to the type of model.

Description

No	Name	Remark
1	Remote Controller Assembly	Built-in Remote Controller
2	Panel Assembly, Front	SGMCD1 M08 ESSENCE WHITE PCM
3	Base Assembly, Indoor	PCB and terminal blocks
4	Cover	MOLD ABS

Outdoor unit : External

[UXC]

(Unit : mm)

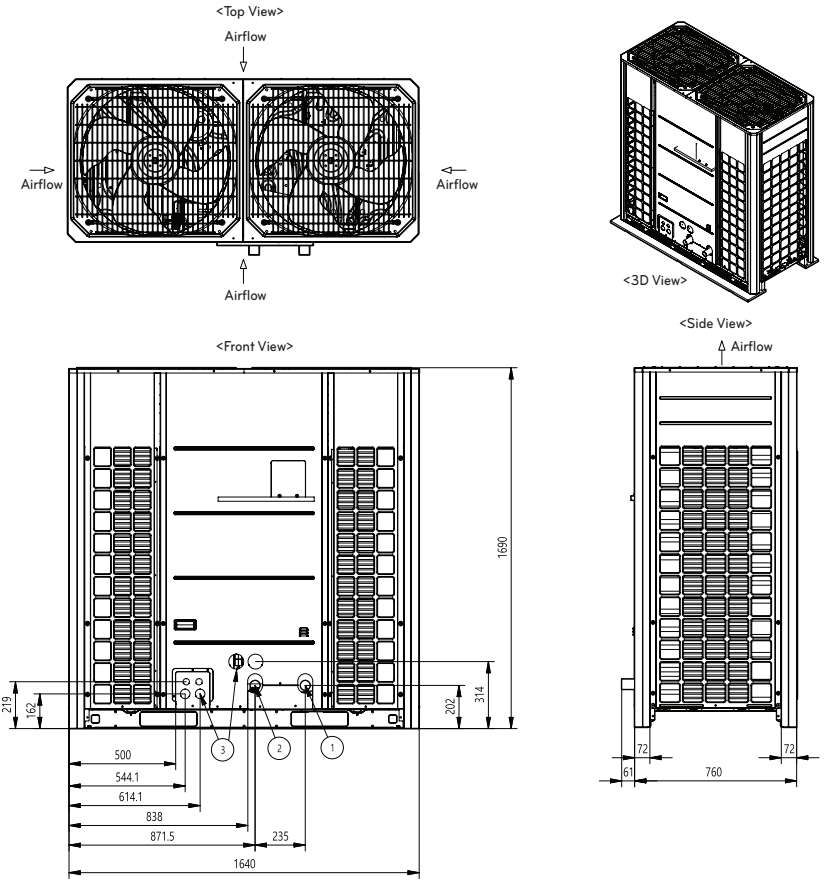

Description

No	Name	Remark
1	Water IN Pipe 1-1/2" Thread Male	-
2	Water Out Pipe 1-1/2" Thread Male	-
3	Wire routing hole(front)	-

Control Parts

Indoor Unit

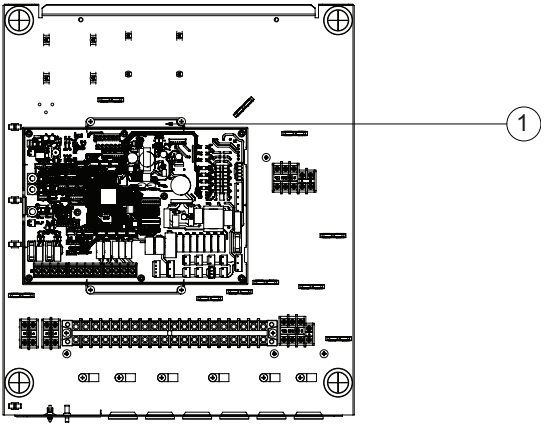

Description

No	Name	Remark
1	Main PCB	The main PCB(Printed Circuit Board) controls the functioning of the unit and the connected accessories

Control Panel

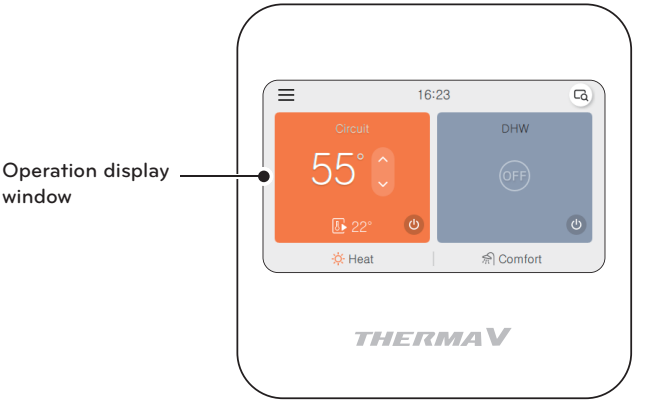

Operation display window	Operation and Settings status display

Typical Installation Example

⚠ CAUTION

For detailed electric wiring and water piping, please contact authorized installer.
It is recommended to install a buffer tank - unless minimum flow rate can be guaranteed elsewise. Especially in older houses, it is recommended to use a magnetic filter.

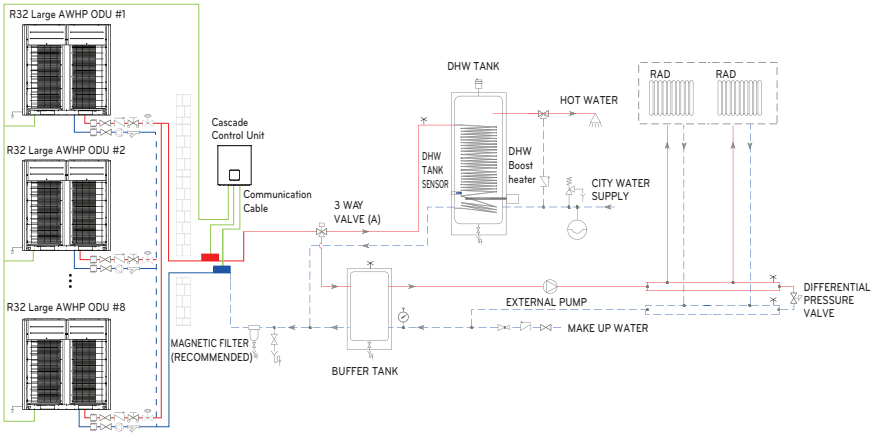

※ It can be different by model.

NOTE

- The exemplary diagram does not include all necessary safety and installation devices. This is not an 'as-built drawing'
- A minimum of 2 units and a maximum of 8 units can be installed with one cascade control unit.
- To ensure even flow distribution and prevent backflow, it is recommended to install a balancing valve with flow meter and a check valve on each product.

Description

	Circulation Pump		Motorized 3 Way Valve		Check Valve		Remote Room Air Sensor
	Expansion Tank		Motorized 2 Way Valve		Safety Relief Expansion Tank Valve with drain		Dry Contact
	Automatic air vent		Differential Pressure Valve		Y-type strainer		Wi-Fi Modem
	Pressure Gauge		Thermostatic Mixing Valve		Flow Sensor		Thermostat
	Flexible Connection		Shut Off Valve		Magnetic Contactor		Cascade Inlet Temperature Sensor
	Drain		Pressure Reducing Valve		Drain Pan		Cascade Outlet Temperature Sensor
	Manual air vent		Balancing Valve				

※ For more installation scenes, visit http://partner.lge.com/ or contact your local LG office. Select Region → Doc. Library → (Product) Heating → Application Guide → Referenced Drawing for Application

Cycle Diagram

[UXC]

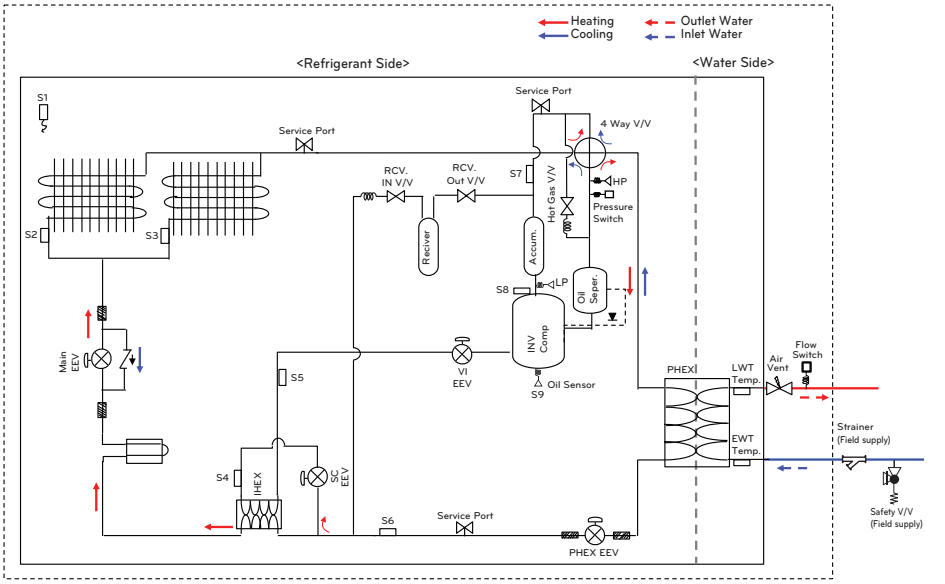

Description

Category	Symbol	Meaning
Refrigerant side	S1	Outdoor air temp. Sensor
	S2	Left HEX temp. Sensor
	S3	Right HEX temp. Sensor
	S4	IHEX in Temp Sensor
	S5	IHEX out Temp Sensor
	S6	Liquid temp. Sensor
	S7	Suction temp. Sensor
	S8	Discharge temp. Sensor
	S9	Oil sensor
	LP	Low pressure sensor
	HP	High pressure sensor
Water side	LWT	Leaving water temp. Sensor
	EWT	Entering water temp. Sensor

Wiring Diagram

Indoor Unit

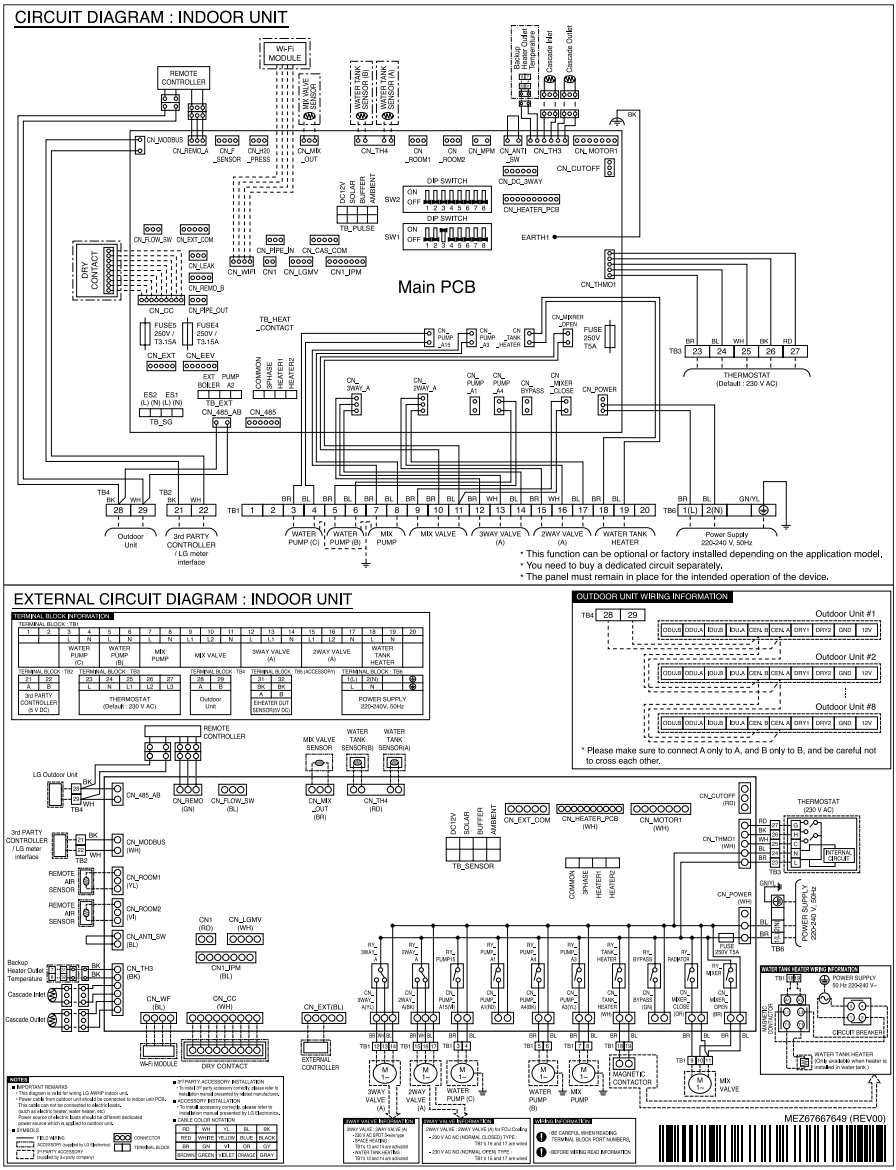

Outdoor Unit

[UXC]

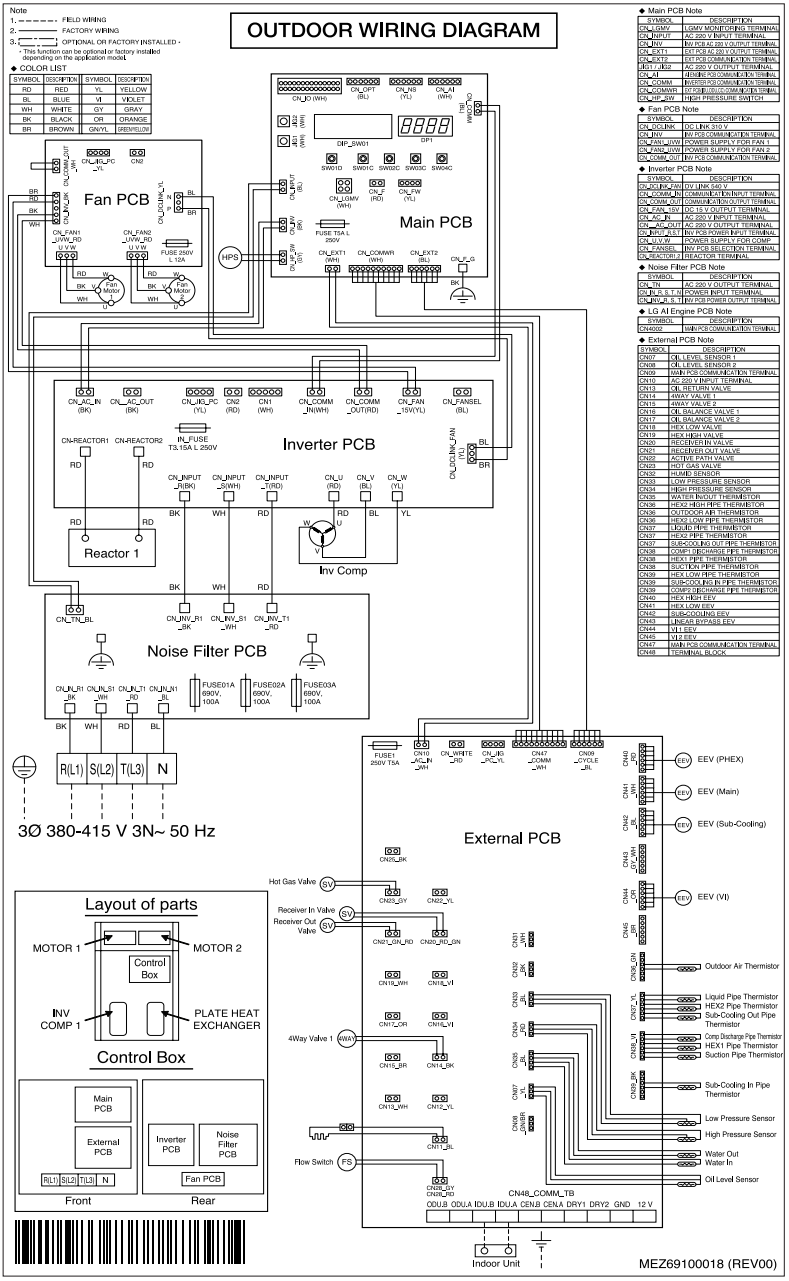

INSTALLATION

Individual Installation Space

The outdoor unit is installed outside to exchange heat with ambient air. Therefore, it is important to secure proper space around the outdoor unit and care for specific external conditions. During the installation of the unit, consider service, inlet, and outlet acquire the minimum space as shown in the figures below.

(Unit: mm)

Category	Installation Space	Case 1 (10 ≤ Side Space≤49)	Case 2 (Side Space ≥ 49)
4 sides are walls	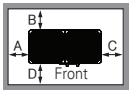	A≥10 B≥300 C≥10 D≥700	A≥50 B≥100 C≥50 D≥700
	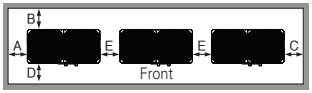	A≥10 B≥300 C≥10 D≥700 E≥20	A≥50 B≥100 C≥50 D≥700 E≥100
	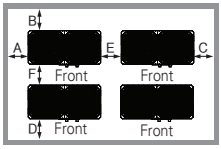	A≥10 B≥300 C≥10 D≥700 E≥20 F≥800	A≥50 B≥100 C≥50 D≥700 E≥100 F≥700
	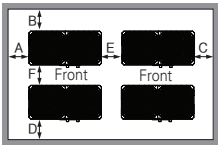	A≥10 B≥300 C≥10 D≥300 E≥20 F≥700	A≥50 B≥100 C≥50 D≥100 E≥100 F≥700
Rear to Rear	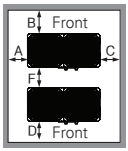	A≥10 B≥700 C≥10 D≥700 F≥900	A≥50 B≥700 C≥50 D≥700 F≥600
	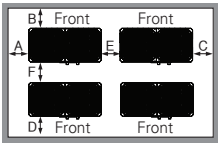	A≥10 B≥700 C≥10 D≥700 E≥20 F≥1200	A≥50 B≥700 C≥50 D≥700 E≥100 F≥900
	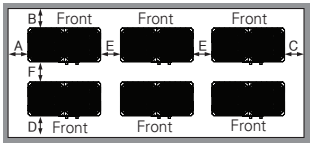	A≥10 B≥700 C≥10 D≥700 E≥20 F≥1800	A≥50 B≥700 C≥50 D≥700 E≥100 F≥1200

(Unit: mm)

<table>
<tr><th>Category</th><th>Installation Space</th><th>Case 1
(10 ≤ Side Space ≤ 49)</th><th>Case 2
(Side Space ≥ 49)</th></tr>
<tr><td rowspan="2">Only 2 sides are walls</td><td>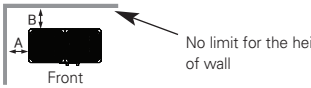
</td><td>A≥10
B≥300</td><td></td></tr>
<tr><td>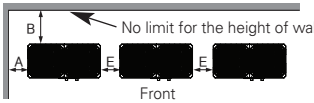
</td><td>A≥10
B≥300
E≥20</td><td></td></tr>
<tr><td>Limitations on the height of the wall
(Refer to 4 side walls)</td><td>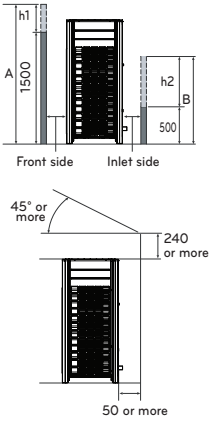
</td><td colspan="2">• The height of the wall on the front side must be 1 500 mm or less.
• The height of the wall on the inlet side must be 500 mm or less.
• There is no limit to the wall on Inlet side.
• If the height of the walls on the front and Inlet side are higher than the limit, there must be additional space on the front and the side.
- Additional Space on the front side by 1/2 of h1
- Additional Space on the inlet side by 1/2 of h2
- h1 = A(Actual height) - 1.500
- h2 = B(Actual height) - 500</td></tr>
</table>

Airborne Noise Emission

The A-weighted sound pressure emitted by this product is below 70 dB.

** The noise level can vary depending on the site.

The figures quoted are emission level and are not necessarily safe working levels.

Whilst there is a correlation between the emission and exposure levels, this cannot be used reliably to determine whether or not further precautions are required.

Factor that influence the actual level of exposure of the workforce include the characteristics of the work room and the other sources of noise, i.e. the number of equipment and other adjacent processes and the length of time for which an operator exposed to the noise. Also, the permissible exposure level can vary from country to country.

This information, however, will enable the user of the equipment to make a better evaluation of the hazard and risk.

Installation at Seaside

⚠ CAUTION

- Unit should not be installed in areas where corrosive gases, such as acid or alkaline gas, are produced.
- Do not install the product where it could be exposed to sea wind (salty wind) directly. It can result corrosion on the product. Corrosion, particularly on the condenser and evaporator fins, could cause product malfunction or inefficient performance.
- If outdoor unit is installed close to the seaside, it should avoid direct exposure to the sea wind. Otherwise it needs additional anti-corrosion treatment on the heat exchanger.

Selecting the location(Outdoor Unit)

- If the outdoor unit is to be installed close to the seaside, direct exposure to the sea wind should be avoided. Install the outdoor unit on the opposite side of the sea wind direction.

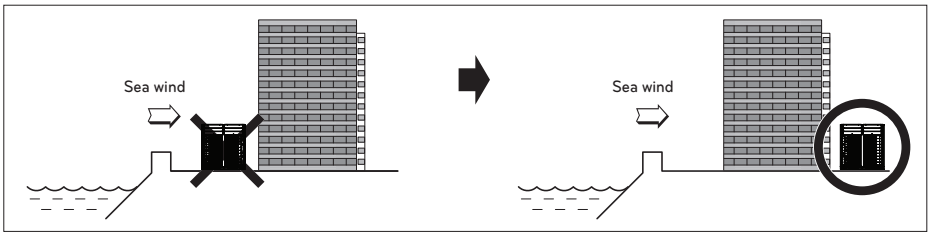

- In case, to install the outdoor unit on the seaside, set up a windbreak not to be exposed to the sea wind.

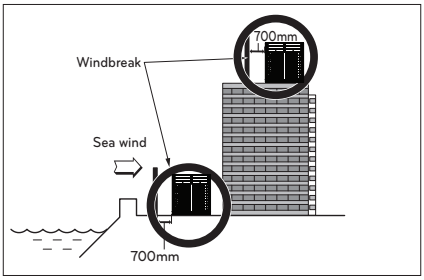

- It should be strong enough like concrete to prevent the sea wind from the sea.
- The height and width should be more than 150 % of the outdoor unit.
- It should be keep more than 700 mm of space between outdoor unit and the windbreak for easy air flow.
- Select a well-drained place. Periodic (more than once/year) cleaning of the dust or salt particles stuck on the heat exchanger by using water.
- If you can't meet above guide line in the seaside installation, please contact your supplier for the additional anti-corrosion treatment.

Lifting Method

- When carrying the suspended, unit pass the ropes under the unit and use the two suspension points each at the front and rear.
- Always lift the unit with ropes attached at four points so that impact is not applied to the unit.
- Attach the ropes to the unit at an angle of 40° or less.

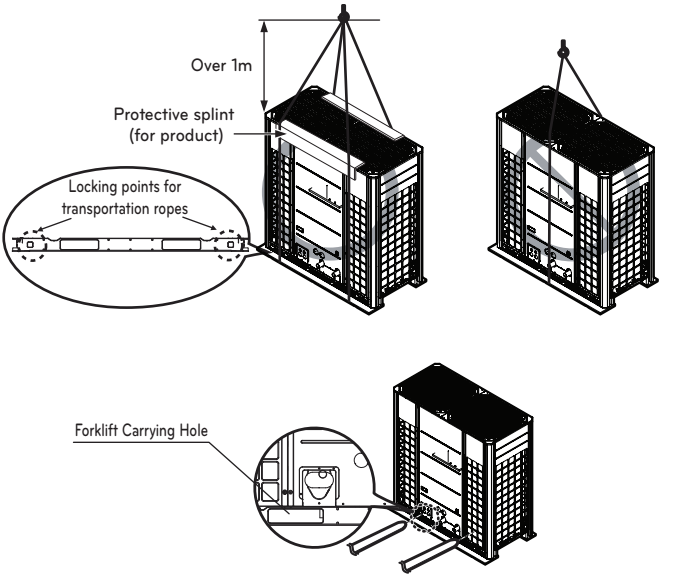

⚠ CAUTION

Be very careful while carrying the product.

- Do not have only one person carry product if it is more than 20 kg.
- PP bands are used to pack some products. Do not use them as a mean for transportation because they are dangerous.
- Do not touch heat exchanger fins with your bare hands. Otherwise you may get a cut in your hands.
- Tear plastic packaging bag and scrap it so that children cannot play with it. Otherwise plastic packaging bag may suffocate children to death.
- When carrying in Outdoor Unit, be sure to support it at four points. Carrying in and lifting with 3-point support may make Outdoor Unit unstable, resulting in a fall.
- Use 2 belts of at least 8 m long.
- Place extra cloth or boards in the locations where the casing comes in contact with the sling to prevent damage.
- Hoist the unit making sure it is being lifted at its center of gravity.

Location Of The Anchor Bolts

- Install at places where it can endure the weight and vibration/noise of the outdoor unit.
- The outdoor unit support blocks at the bottom shall have width of at least 100 mm under the Unit's legs before being fixed.
- The outdoor unit support blocks should have minimum height of 200 mm.
- Anchor bolts must be inserted at least 75 mm.

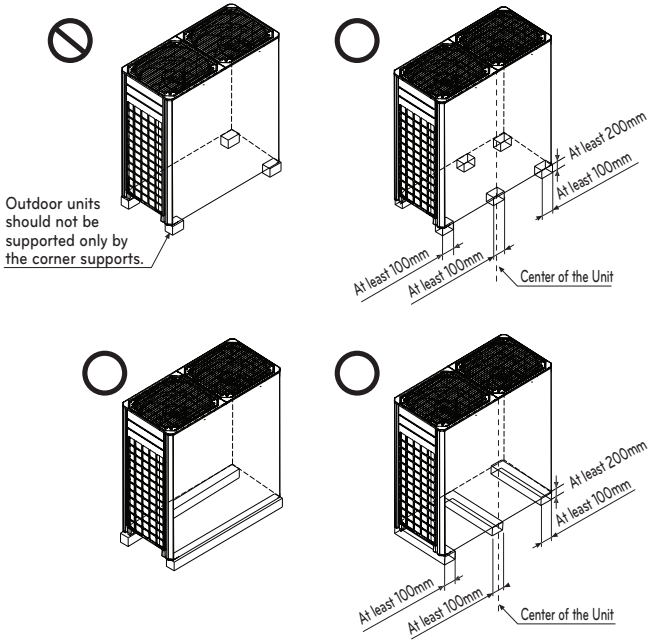

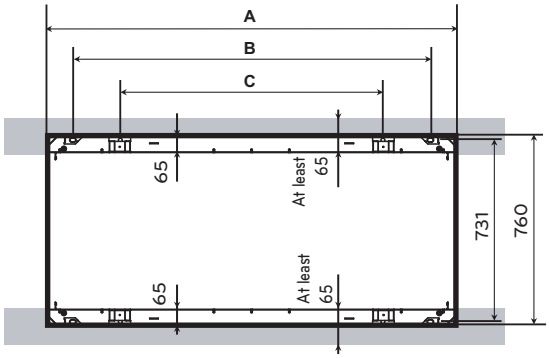

(Unit: mm)

Chassis	A	B	C
UXC	1 640	1 438	1 056

Foundation for Installation

- Fix the unit tightly with bolts as shown below so that unit will not fall down due to earthquake or gust.
- Use the H-beam support as a base support
- Noise and vibration may occur from the floor or wall since vibration is transferred through the installation part depending on installation status. Thus, use anti-vibration materials (cushion pad) fully (The base pad shall be more than 200 mm).

(Unit: mm)

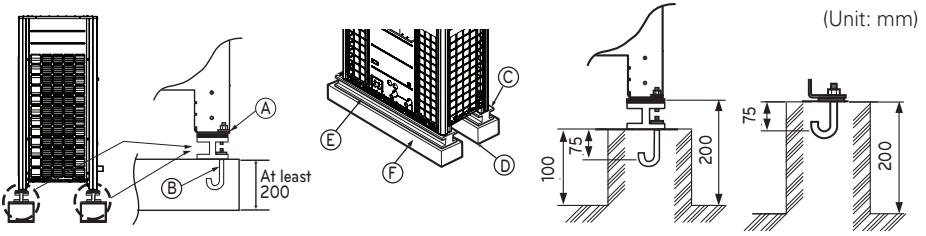

Ⓐ The corner part must be fixed firmly. Otherwise, the support for the installation may be bent.

Ⓑ Get and use M10 Anchor bolt.

Ⓒ Put Cushion Pad between the outdoor unit and ground support for the vibration protection in wide area.

Ⓓ Space for pipes and wiring (Pipes and wirings for bottom side)

Ⓔ H-beam support

Ⓕ Concrete support

⚠ WARNING

- Install where it can sufficiently support the weight of the outdoor unit.
  If the support strength is not enough, the outdoor unit may drop and hurt people.
- Install where the outdoor unit may not fall in strong wind or earthquake.
  If there is a fault in the supporting conditions, the outdoor unit may fall and hurt people.
- Please take extra cautions on the supporting strength of the ground, water outlet treatment(treatment of the water flowing out of the outdoor unit in operation), and the passages of the pipe and wiring, when making the ground support.
- Do not use tube or pipe for water outlet in the Base panel. Use drainage instead for water outlet. The tube or pipe may freeze and the water may not be drained.

⚠ CAUTION

- Be sure to remove the Pallet(Wood Support) of the bottom side of the outdoor unit Base panel before fixing the bolt. It may cause the unstable state of the outdoor settlement, and may cause freezing of the heat exchanger resulting in abnormal operations.
- Be sure to remove the Pallet(Wood Support) of the bottom side of the outdoor unit before welding. Not removing Pallet(Wood Support) causes hazard of fire during welding.

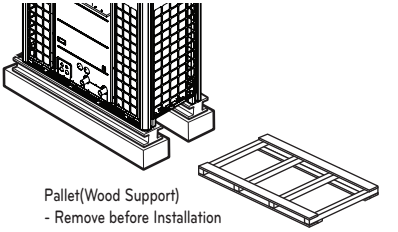

Seasonal wind and cautions in winter

- Sufficient measures are required in a snow area or severe cold area in winter so that product can be operated well.
- Get ready for seasonal wind or snow in winter even in other areas.
- Install a suction and discharge duct not to let in snow or rain.
- Install the outdoor unit not to come in contact with snow directly. If snow piles up and freezes on the air suction hole, the system may malfunction. If it is installed at snowy area, attach the hood to the system.
- Install the outdoor unit at the higher installation console by 500 mm than the average snowfall (annual average snowfall) if it is installed at the area with much snowfall.
- Where snow accumulated on the upper part of the Outdoor Unit by more than 100 mm, always remove snow for operation.

⚠ CAUTION

- The height of H frame must be more than 2 times the snowfall and its width shall not exceed the width of the product. (If width of the frame is wider than that of the product, snow may accumulate)
- Don't install the suction hole and discharge hole of the Outdoor Unit facing the seasonal wind.

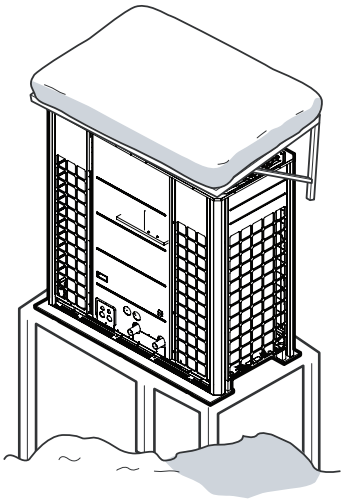

※ It can be different by model.

Installation considering the snow protection

- Do not install the product near the edges of the rooftop.
  (Snow can fall down to the product and push off the product off the roof. If snow is accumulated between the building wall and product, it can cause issues with the product.)
- Raise the base higher than the snow accumulation.
  (Make sure to secure the path near the heat exchanger of the product in case of snow)
- Avoid installing the product where the snow is accumulated.

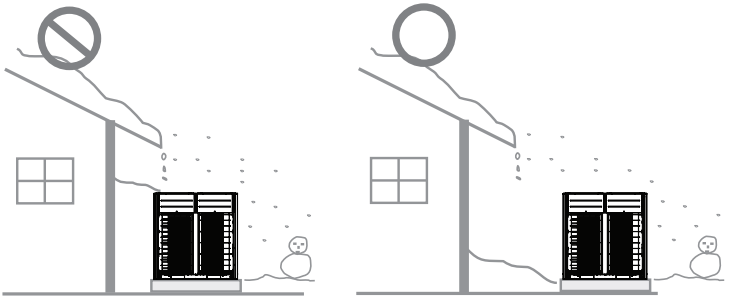

Snowfall Hood

Snowfall hood installation required materials and quantity

Chassis	Size (mm) (W X H X D)	Quantity				
		Snowfall hood				Air guide
		Left	Right	Front	Rear	
UXC	1 640 X 1 690 X 825	1	1	2	1	2

- For more information, please refer to PDB Engineering Data.
- In areas with heavy snowfall in winter, it is recommended to install a snowfall hood and an air guide at the same time for optimal driving.
- The height (H) of the product size is the height excluding the discharge grill.

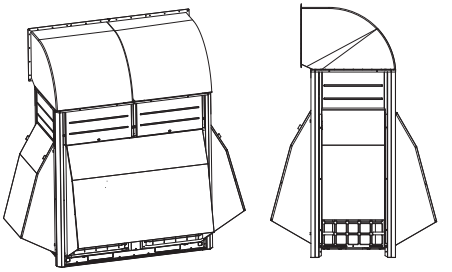

Water pipe connection

Water pipe construction is a very important part of the design or construction of the water circulating system. Any defect in any location of the pipe can disable the applicable unit from performing sufficiently. Perform the design and construction considering the check service.

Water pipe system diagram

Water circulation that has temperature difference of 3 °C ~ 8 °C between the outlet water temperature of the hot and cold water is required. If the water circulation is insufficient, the product will not be able to perform properly and will have negative impact on the life of the product, as well as other issues with the product.

Make sure to secure water circulation in accordance with the specification.
Also even when the water circulation is secured in accordance with the specification, bypass circuit must be installed on the 1st side for the water pipe system of the product. Therefore if the water flow is reduced during low load, it can cause issues such as excessive and frequent operation of compressor and freezing during stopped condition or cooling operation.
Water circulation must maintain constant flow as much as possible.

* For the parts used in the water pipe system, make sure to use the parts that comply with designed water pressure or higher.

Expansion tank

Expansion tank is the device that discharges the expanded water and at the same time, removes the air within the water pipe circuit.
Set the capacity of the expansion tank to 2-2.5 times of the water expansion amount.
(Generally it is 3-5 % of the entire amount within the water pipe circuit.)

Pipe slope and air vent

If air remains within the pipe, the resistance of the water pipe circuit increases or the circulating amount of water is reduced significantly. If air remains in the pump during the operation, it can cause several issues to disable the operation.
Install the air vent valve where there is a chance of air remaining within the entire water pipe circuit and apply 1/200 of slope to the air vent valve side to avoid the air from remaining in the pipe.

Water pipe system diagram

- Connect the pipe so that the entrance of the cold (hot) water pipe is correct.
- Permitted water pressure resistance of water pipe system is 1 000 kPa
- To prevent any external heat loss or dew drops forming during the cooling operation on the water pipe system, apply thermal insulation treatment.
- Install the air vent at the output end of the water pipe. (Air vent)
- If the thermometer is installed on the inlet/outlet of the cold/hot water pipe, the operating condition of the product can be checked.
- Always install the strainer (30 Mesh or above) that can be cleaned on the water pipe inlet side to filter any debris from entering the heat exchanger.
- Always install the strainer on the leveled pipe. (If sand, trash or rust gets mixed to the water system, it can cause product failure due to corrosion of metallic parts.)
- Install the on/off valve on the water inlet/outlet and bypass pipe on the pipe direction of the device side.
  - For the pipe system, it is recommended to install the bypass and clean the pipe before installing the product and during the annual pipe cleaning.
  - On/Off valve blocks the long-used water to the product that is not operating to reduce the power of the pump. Therefore select whether to install to fit the need of the site.
- Install the pressure gauge and thermometer on the inlet and outlet of the water pipe.
- Always install the flexible joint to reduce the vibration of the pipe and product.
  - Vibration of water pipe system is absorbed to prevent water leakage.
- For the water system part, make sure to use the component that complies with designed water pressure or above.
- Before supplying water to the product, clean inside the pipe system to remove any negative impact of particles to the product.

Independent product installation (Recommended method)

- Installation method A

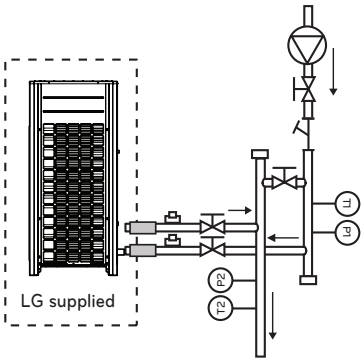

- Installation method B

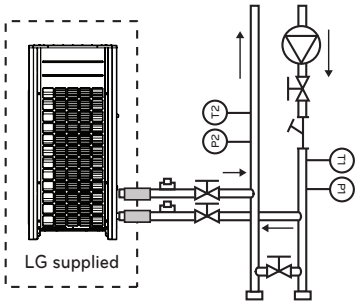

Symbol	Description	Symbol	Description
	Valve	T1, T2	Temperature sensor (1: Inlet 2: Outlet)
	Strainer	P1, P2	Pressure gauge (1: Inlet, 2 Outlet)
	Flexible joint		Water pump
	Service port for cleaning		

Connection

⚠ CAUTION

- If the winter outdoor temperature is 0 °C or below, take following measures to prevent the pipe from freezing as shown below.
  - If the outdoor temperature is low, the circulation water can freeze to damage the heat exchanger of the product when the product is stopped.
    If there is possibility of damage from low outdoor temperature, operate the pump to prevent the water from freezing.
  - If the product does not operate for a long period of time during the winter season, remove all the circulation water to prevent the damage of heat exchanger and pipe from freezing.
  - Add anti-freeze additive to prevent the circulation water from freezing during the winter season.
- Maintain the water flow within the designed flow to ensure appropriate product performance and reduce the tube damage from rusting, scaling and corrosion. LG is not responsible for any damage of product from poor water quality management or inappropriate processing water.
- While connecting water pipes, followings should be considered.
  - Pipe fittings (e.g. L-shape elbow, T-shape tee, diameter reducer, etc) should be tightened strongly to be free from water leakage.
  - Connected sections should be leakage-proof treatment by applying teflon tape, rubber bushing, sealant solution, etc.
  - Appropriate tools and tooling methods should be applied to prevent mechanical breakage of the connections.
  - Drain hose should be connected with drain piping.
  - Maximum allowable Torque at the water piping connection is 50 N·m

1 Water pipe installation
- Appropriate pressure of pipe connection is flange connection of 1 000 kPa or below.
- Size of the water pipe must be the same as that of the product or larger.
- If there is risk of dew drops forming, always install the thermal insulation material on the outlet pipe of the water.
- To avoid connected water pipe from creeping from the load, use appropriate hook for support.
- To prevent the pipe connected part from freezing during the winter season, always install the drain valve at the most bottom of the pipe system.
- After connecting the water pipe, the connection must be covered with at least 25.4 mm of insulation.
- When connecting the water pipe, remove the rear panel and connect.

2 Water pump control
- If the water pump is not operating for a long period of time or if the anti-freeze liquid is not used as the water, the anti-freeze pump control must be installed to prevent the pipe from freezing.
- The vibration of the pump can transfer to the pipe to cause noise indoors. As the plan to prevent the noise from spreading in the pump, install flexible joints at the inlet/outlet and use the anti-vibration amount for the pump support.

3 Water Quality

- Water quality should be complied with EN 98/83 EC Directives.
- Detailed water quality condition can be found in EN 98/83 EC Directives.

⚠ CAUTION

- If the product is installed at existing hydraulic water loop, it is important to clean hydraulic pipes to remove sludge and scale.
- Installing sludge strainer in the water loop is very important to prevent performance degrade.
- Chemical treatment to prevent rust should be performed by installer.
- It is strongly recommended to install an additional filter on the heating water circuit. Especially to remove metallic particles from the heating piping, it is advised to use a magnetic or cyclone filter, which can remove small particles. Small particles may damage the unit and will NOT be removed by the standard filter of the heat pump system.

Precaution to prevent freezing

If the product does not run when the outdoor temperature is 0 °C or below during the winter, the water must be drained or anti-freeze additive must be added to prevent the water from freezing.

Input pipe must be installed to be leveled.

The pipe must be leveled and installed so that water does not remain in the inlet pipe connected to the product when draining the water through the drain hole.

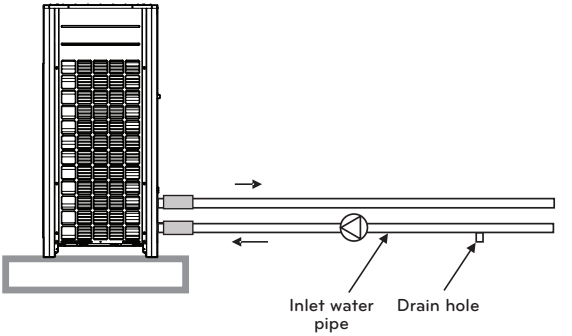

If the inlet water pipe is installed in trap structure without being leveled, the water will remain in the inlet water pipe even when the pipe is drained and the inlet water pipe or the part within the product can be damaged from freezing. Therefore add a drain hole at the bottom of the pipe as shown below.

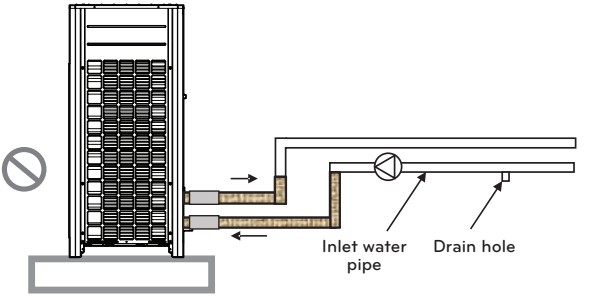

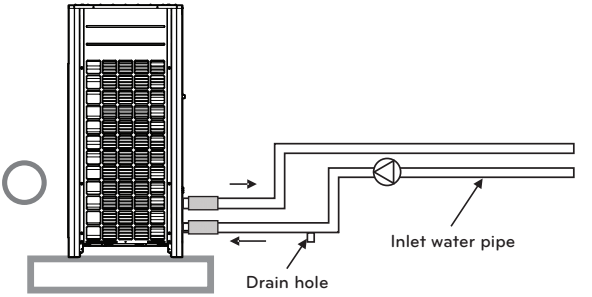

Frost protection by antifreeze valve

About antifreeze valve

This is a valve to prevent freeze in winter. When no antifreeze is added to the water, you can use antifreeze valves at all lowest points of the field piping to drain the water from the system before it can freeze

To install antifreeze valve

To protect the field piping against freezing, install the following parts:

Antifreeze valve

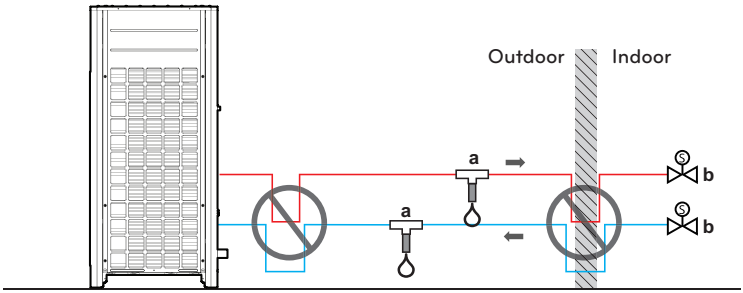

※ It can be different by model.

a Antifreeze valve (Optional – field supply)
b Normally closed valves (recommended – field supply)

Part	Description
a	Protection for the field piping. The antifreeze valve must be installed: • Vertically to allow water to flow out properly and free from obstructions. • At all lowest points of the field piping. • In the coldest part and away from heat sources.
b	Isolation of water inside the house when there is a power interruption. Normally closed valves (located indoors near the piping entry/exit points) can prevent that all water from indoor piping is drained when the antifreeze valve open. • **When there is a power interruption:** The normally closed valves close and isolate the water inside the house. If the antifreeze valve open, only the water outside the house is drained. • **In other circumstances** (example: when there is a pump failure): The normally closed valves remain open. If the antifreeze valve open, the water from inside the house is also drained.

NOTE

- Do not make any trap connections. If the shape of the connection pipe has the potential to create a trap effect, part of the pipe will not be able to drain and frost protection will no longer be guaranteed.
- Leave at least 15 cm clearance from the ground to prevent ice from blocking the water exit.
- Keep a distance of at least 10 cm between the antifreeze valves.
- The valve must be free of insulation for the system to work properly.
- When antifreeze valves are installed, do NOT select a minimum cooling setpoint lower than 7 °C. If lower, antifreeze valves can open during cooling operation.
- When installed outdoors, the antifreeze valve must be protected from rain, snow and direct sunlight.

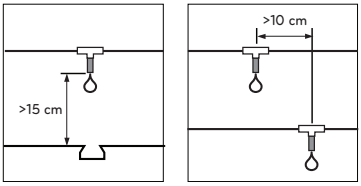

If you do not operate the product when the outside temperature in winter falls below freezing, you must remove water from the pipe or operate a pump to prevent the water from freezing.

Adopt the following methods to prevent freezing. Otherwise, there is a risk of freezing in winter.

- Use ethylene glycol-based or propylene glycol-based antifreeze (freeze inhibitor)
- Keep the concentration of the antifreeze below the freezing temperature of -15 °C

※ Freezing temperature -15 °C concentration standard :
  - Ethylene glycol : More than 30%
  - Propylene glycol : More than 35%

Glycol Solution is required for Freezing temperature operation at or below 5 °C
(See table for percentage of glycol concentration as a function of outdoor temperature)

Freezing temperature	Ethylene glycol	Propylene glycol
-3°C	10%	10%
-7°C	20%	20%
-15°C	30%	35%
-20°C	40%	40%
-25°C	42%	45%
-30°C	45%	50%

Precautions when using antifreeze

- If you want to use an antifreeze other than ethylene glycol or propylene glycol, contact us or the installation store
- For all circulating water (antifreeze) and additives (corrosion inhibitor, antifoam agent, etc.), please contact us or an installation specialist for environmental impact, toxicity, corrosiveness, harm to human body, maintenance plan, etc
- The installer must pay special attention to the rules and regulations applicable to the handling, packaging and transportation of antifreeze
- Do not use a heating medium other than the specified antifreeze.
- When using antifreeze, it must be used according to the specified type and concentration. (Direct injection of the undiluted solution is prohibited. When bringing the undiluted solution into the field, be sure to consult with the project owner or supervisor)
- Before injecting antifreeze, remove any air that may remain in the system, then apply pressure to check for leaks
- If left unattended, antifreeze absorbs moisture in the air and the concentration decreases, which can lead to freezing of heat exchangers and water pipes. must be maintained
- After draining the water in the water pipe system, rinse thoroughly with clean water
- Inject antifreeze in an undiluted state and keep the freezing temperature below -15 °C with water injected. Note that if the concentration of antifreeze is increased, the pumping ability will decrease due to viscosity and specific gravity. The concentration of antifreeze should be controlled by measuring it with a densitometer.
- Be careful not to leak the antifreeze, and if there is a leak, the antifreeze should be replenished
- When antifreeze is added, it cannot be used for hot water supply or food.
- Check the concentration of antifreeze regularly (at least once a year) and check the concentration before winter to prevent freezing

INSTALLATION OF INDOOR UNIT

The indoor unit should be installed in a room that allows easy access to outdoor unit and heating system both.

In this chapter conditions for installation place is described. In addition, considerations when installing accessories or 3rd party accessories are described, too.

Conditions where Indoor Unit is Installed

Specific conditions are required for installation place such as service space, wall mounting, water pipe length and height, total volume of water, adjusting expansion vessel, and water quality.

General Considerations

Followings are should be considered before the installation of the indoor unit.

- Choose a place with water-resistant floor and access to the drainage system of the house.
- Service space should be secured.
- No flammable materials around the indoor unit.
- Mice can not be appeared to prevent entering the indoor unit or attacking wires.
- Do not place anything in front of the indoor unit to ensure air circulation around the indoor unit.
- Do not place anything below the unit that can be damaged by leaking water.

Service Space

- Ensure that the spaces indicated by arrows around bottom, side, and top side.
- Wider spaces are preferred for easy maintenance.
- If minimum service space is not secured, air circulation can be troubled and internal parts of the indoor unit can be damaged by overheating.

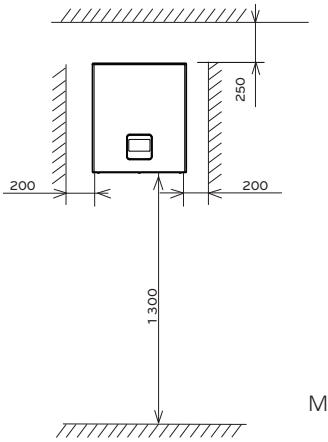

Minimum service space
(unit : mm)

Mounting to wall

Step 1. Marked releasing six screws.

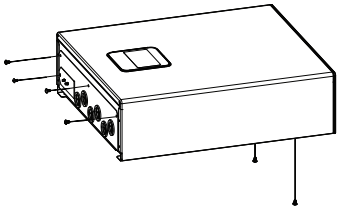

⚠ CAUTION

Use a flat-blade Screwdriver or a coin to remove the remote control case.

Step 2. Open the bracket cover and disconnect the remote control connector.

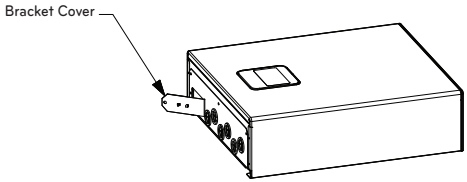

Step 3. Remove the front cover.

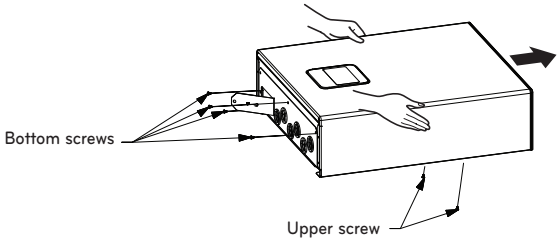

⚠ CAUTION

Do internal wiring work.

Step 4. Attach "Installation Sheet" to the wall and mark the location of bolts.
This sheet helps to find correct location of bolts.

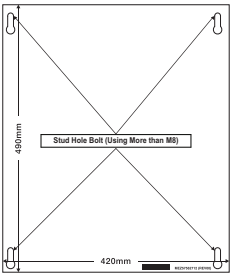

⚠ CAUTION

The attached "Installation sheet" should be level.
If not, the supporting plate and the indoor unit will not be mounted correctly.

Step 5. Detach the Installation sheet. Screw bolts at the hole marks on the wall.
When screwing bolts, use M8 ~ M11 anchor bolts to secure hanging the indoor unit.

NOTE

Self drilling screw can be used as alternatives of M8 ~ M11 anchor bolts. But M8 ~ M11 anchor bolts are more preferred.

Step 6. Hang the indoor unit at the supporting plate.

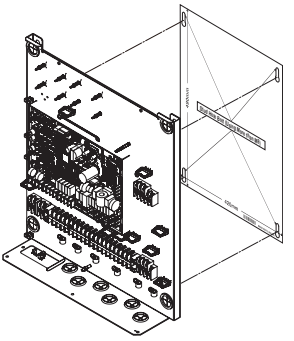

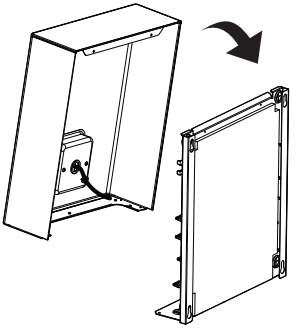

Step 7. Cover the front cover, assemble the remote control connector, close the bracket cover, and marked the four screw bolts below. To prevent the remote control harness from getting caught, place it inside the panel or front before installing it.

NOTE

Should be marked on the bottom of the 4 screws.

ELECTRICAL WIRING

- Follow ordinance of your governmental organization for technical standard related to electrical equipment, wiring regulations and guidance of each electric power company.

⚠ WARNING

Be sure to have authorized electrical engineers do the electric work using special circuits in accordance with regulations and this installation manual.
If power supply circuit has a lack of capacity or electric work deficiency, it may cause an electric shock or fire.

- Install the Outdoor Unit communication cable away from the power source wiring so that it is not affected by electric noise from the power source. (Do not run it through the same conduit.)
- Be sure to provide designated grounding work to Outdoor Unit.

⚠ CAUTION

Be sure to correct the outdoor unit to earth. Do not connect ground wire to any gas pipe, liquid pipe, lightening rod or telephone earth line. If earth is incomplete, it may cause an electric shock.

- Give some allowance to wiring for electrical part box of control and Outdoor Units, because the box is sometimes removed at the time of service work.
- Never connect the main power source to terminal block of communication cable. If connected, electrical parts will be burnt out.
- Only the communication cable specified should be connected to the terminal block for Outdoor Unit communication.

⚠ CAUTION

- Use the 2-core shielded wires for communication cables. Never use them together with power cables.
- The conductive shielding layer of cable should be grounded to the metal part of both units.
- Never use multi-core cable
- As this unit is equipped with an inverter, to install a phase leading capacitor not only will deteriorate power factor improvement effect, but also may cause capacitor abnormal heating. Therefore, never install a phase leading capacitor.
- Make sure that the power unbalance ratio is not greater than 2%.
  If it is greater the units lifespan will be reduced.

Precautions when laying power wiring

Use round pressure terminals for connections to the power terminal block.

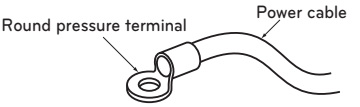

When none are available, follow the instructions below.

- Do not connect wiring of different thicknesses to the power terminal block. (Slack in the power wiring may cause abnormal heat.)
- When connecting cable which is the same thickness, do as shown in the figure below.

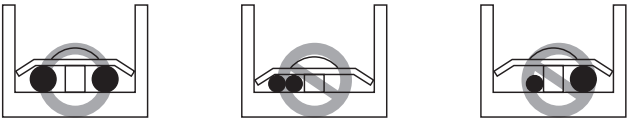

- For wiring, use the designated power cable and connect firmly, then secure to prevent outside pressure being exerted on the terminal block.
- Use an appropriate screwdriver for tightening the terminal screws. A screwdriver with a small head will strip the head and make proper tightening impossible.
- Over-tightening the terminal screws may break them.

⚠ WARNING

Make sure that the screws of the terminal are free from looseness.

Electric specification

	Model name (Buyer)	Power supply	Max. current	Circuit breaker	Power cable (incl. Earth)	Cable spec
Power supply Outdoor unit	HM513MR	380-415V 50 Hz	42A	50A	10 mm^2 x 5C	H07RN-F
Communication cable	-	-	-	-	1.0~1.5 mm^2 x 2C (Shielded)	H07RN-F
Power supply Indoor unit	PHCML0	220-240V 50 Hz	0.6 A	10A	0.75 mm^2 x 3C	H07RN-F

※ Recommended diameter is feasible up to 20 m cable length. In any case, the diameter must be verified by professional electrician based on national rules and standards

⚠ WARNING

- Pipes and wires should be purchased separately for installation of the product.
- Always use regulated wire so that the connector of the terminal does not fall off from external force. If the connector is not fixed firmly, it can cause heating, resulting in a fire.
- Always use appropriate over-current protection switch. Generated over-current includes low level of DC.
- Leakage current circuit breaker for grounding must be installed. If not installed, it can cause electric shock.
- Use only the circuit breaker and fuse of accurate capacity. Using fuse, wire or copper wire with excessive capacity can cause malfunction or a fire.
- Do not connect the 3 phase 3 wire type connection in reverse/missed phase.

Control box and connecting position of wiring

- Remove all of the screws at front panel and remove the panel by pulling it forward.
- Connect communication cables between outdoor unit and Indoor units through the terminal block.
- When the central control system is connected to the outdoor unit, a dedicated PCB must be connected between them.
- When connecting communication cable between outdoor unit and Indoor units with shielded cable, connect the shield ground to the earth screw.

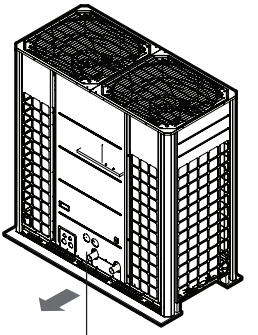

⚠ WARNING

The temperature sensor for outdoor air should not be exposed to direct sunlight.
- Provide an appropriate cover to intercept direct sunlight.

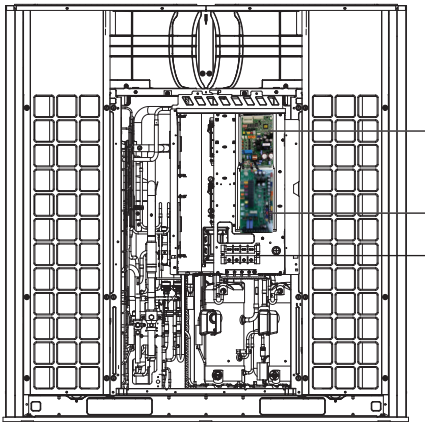

Communication and Power Cables

Communication cable

- Types : Shielded wires
- Cross section : 1.0 ~ 1.5 mm^2
- Maximum allowable temperature: 60 °C
- Maximum allowable cable length: under 1 000 m

⚠ CAUTION

In case of using the shielded wires, it should be grounded.

Separation of communication and power cables

- If communication and power cables are installed alongside each other then there is a strong likelihood of operational faults developing due to interference in the signal wiring caused by electrostatic and electromagnetic coupling.
  The tables below indicates our recommendation as to appropriate spacing of communication and power cables where these are to be run side by side.

Current capacity of power cable		Spacing
100V or more	10A	300 mm
	50A	500 mm
	100A	1 000 mm
	Exceed 100A	1 500 mm

NOTE

- The figures are based on assumed length of parallel cabling up to 100 m. For length in excess of 100 m the figures will have to be recalculated in direct proportion to the additional length of cable involved.
- If the power supply waveform continues to exhibit some distortion the recommended spacing in the table should be increased.
  - If the cable are laid inside conduits then the following point must also be taken into account when grouping various cable together for introduction into the conduits
  - Power cable(including power supply to air conditioner) and communication cables must not be laid inside the same
  - In the same way, when grouping the power wires and communication cables should not be bunched together.

⚠ CAUTION

If apparatus is not properly earthed then there is always a risk of electric shock, the grounding of the apparatus must be carried out by a qualified person.

Wiring of main power supply and equipment capacity

- Use a separate power supply for the Outdoor Unit and Indoor Unit.
- Bear in mind ambient conditions (ambient temperature,direct sunlight, rain water,etc.) when proceeding with the wiring and connections.
- The cable size is the minimum value for metal conduit wiring.
  The power cord size should be 1 rank thicker taking into account the line voltage drops.
  Make sure the power-supply voltage does not drop more than 10%.
- Specific wiring requirements should adhere to the wiring regulations of the region.
- Power supply cords of parts of appliances for outdoor use should not be lighter than polychloroprene sheathed flexible cord.
- Don't install an individual switch or electrical outlet to disconnect each of Indoor unit separately from the power supply.

	Model Name (Buyer)	Power Supply	Power Cable (incl. Earth)	Cable Spec	Circuit Breaker
Power Supply Outdoor Unit	HM513MR UXC0	380-415V 50Hz	10.0m^2 x 5C	H07RN-F	50A

Ground wire

- The above standard is CV wire standard.
- Please use the 3-phases 4-wires quadrupole Leakage circuit breaker of circuit breaker.

⚠ WARNING

- Follow ordinance of your governmental organization for technical standard related to electrical equipment, wiring regulations and guidance of each electric power company.
- Make sure to use specified cables for connections so that no external force is imparted to terminal connections. If connections are not fixed firmly, it may cause heating or fire.
- Make sure to use the appropriate type of overcurrent protection switch. Note that generated overcurrent may include some amount of direct current.

⚠ CAUTION

- All installation site must require attachment of an earth leakage breaker. If no earth leakage breaker is installed, it may cause an electric shock.
- Do not use anything other than breaker and fuse with correct capacity. Using fuse and wire or copper wire with too large capacity may cause a malfunction of unit or fire.

Field Wiring

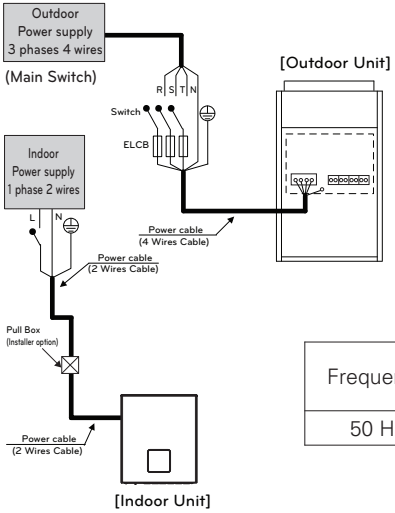

Frequency	Voltage range(V)	
	Outdoor Unit	Indoor Unit
50 Hz	380 - 415V	220 - 240V

⚠ WARNING

- Indoor Unit ground wires are required for preventing electrical shock accident during current leakage, Communication disorder by noise effect and motor current leakage (without connection to pipe).
- Don't install an individual switch or electrical outlet to disconnect each of Indoor unit separately from the power supply.
- Install the main switch that can interrupt all the power sources in an integrated manner because this system consists of the equipment utilizing the multiple power sources.
- If there exists the possibility of reversed phase, lose phase, momentary blackout or the power goes on and off while the product is operating, attach a reversed phase protection circuit locally. Running the product in reversed phase may break the compressor and other parts.

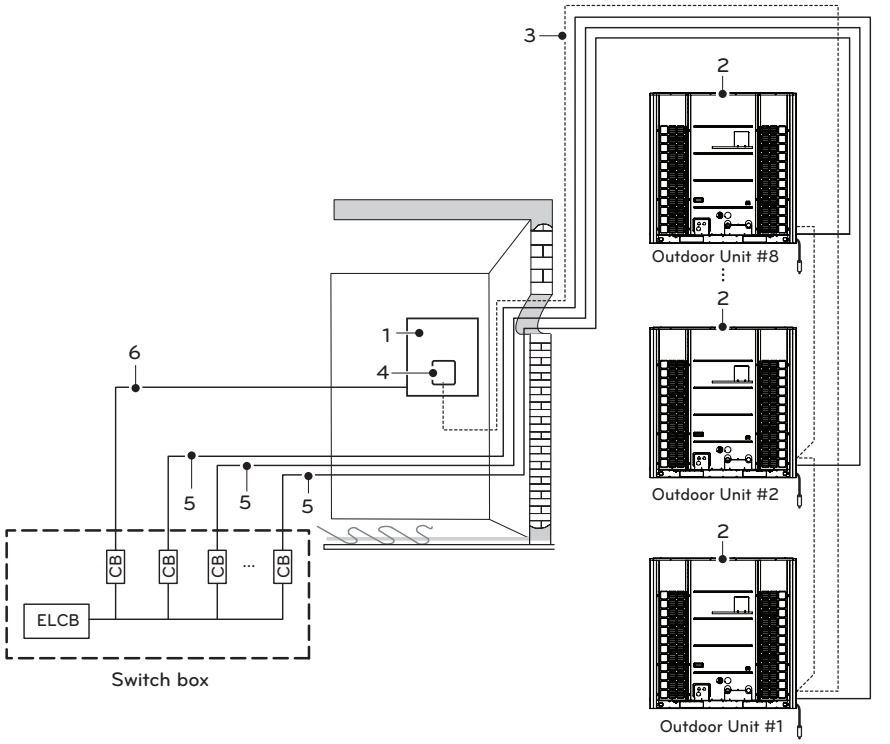

Description

No	Name	No	Name
1	Cascade control unit	4	Remote controller
2	Outdoor unit	5	Power supply outdoor unit
3	Communication cable	6	Power supply indoor unit

ELCB : Earth-leakage circuit breaker
CB : Circuit breaker

NOTE

- Voltage supplied to the unit terminals should be within the minimum and maximum range.
- Maximum allowable voltage unbalance between phase is 2%.
- All installation sites must be equipped with an earth leakage circuit breaker (ELCB).

Example) Connection of power and communication cable

Bottom Side

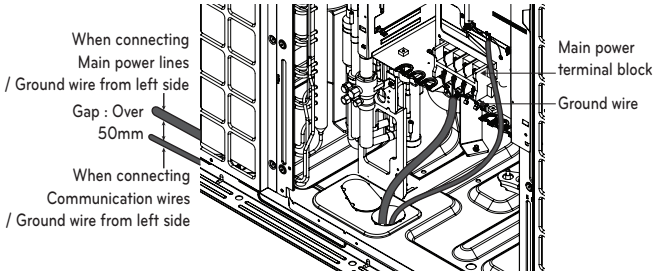

Front Side

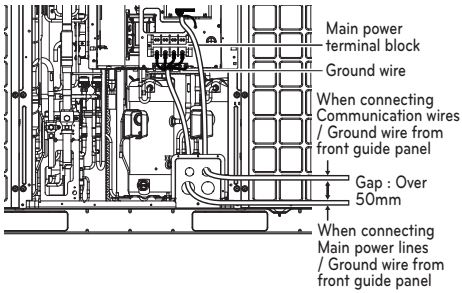

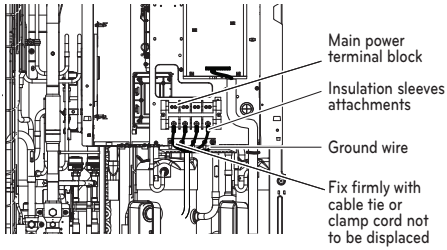

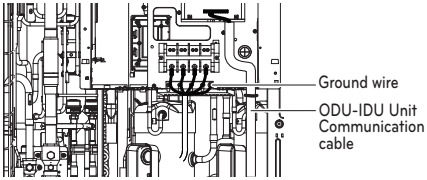

⚠ CAUTION

It should be wiring power cables or communication cables to avoid interference with the oil level sensor. Otherwise, That oil level sensor would be operated abnormally.

Connection for communication with indoor unit and outdoor units

Step 1. Disassemble front cover from cascade control unit.

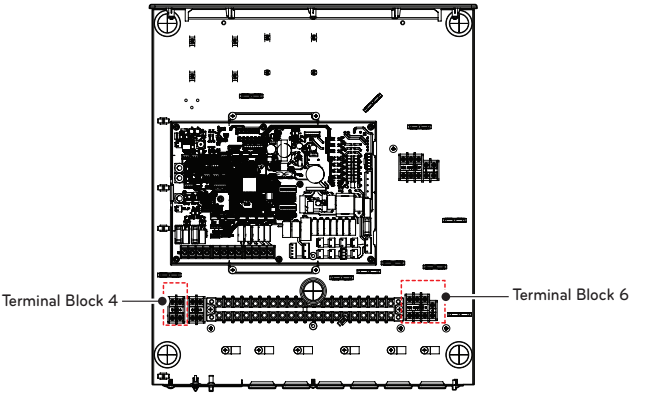

Step 2. Connect power cable to Terminal Block 6 in cascade control unit.

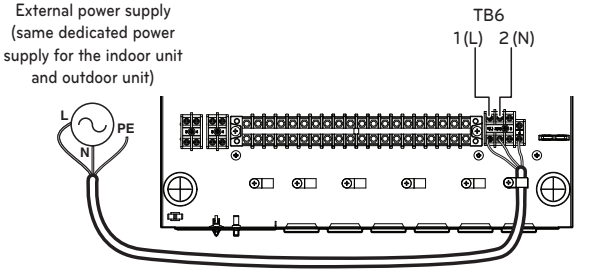

Step 3. Connect communication cable to Terminal Block 4 in cascade control unit.
Step 4. Connect communication cable to Outdoor PCB terminal block in outdoor unit.

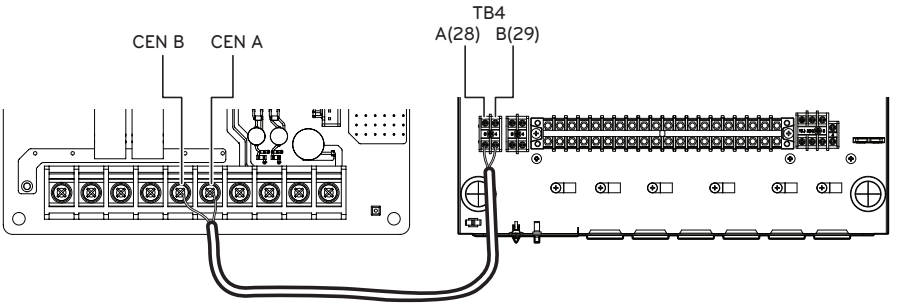

Step 5. Connect communication cable between outdoor units.

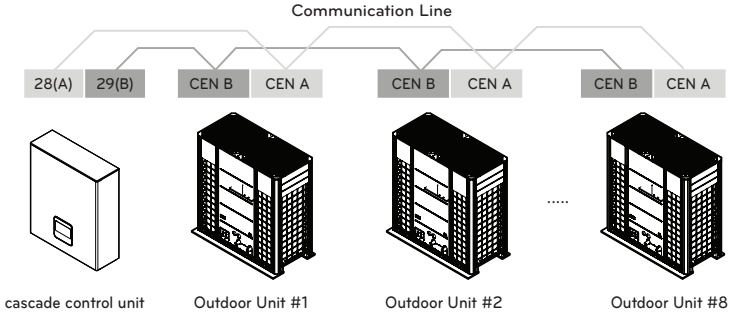

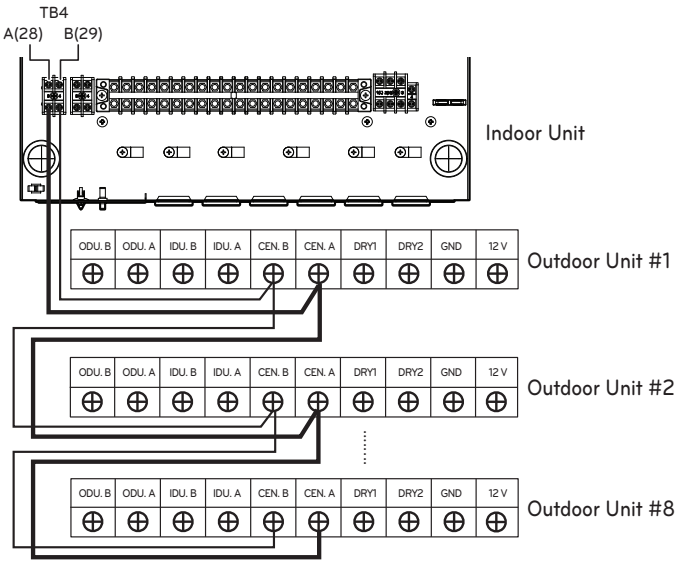

※ Please make sure to connect A only to A, and B only to B, and be careful not to cross each other.

Step 6. Reassemble front cover to cascade control unit.

⚠ CAUTION

You should separate the communication wiring, in case of communication wiring length is over 40 m.

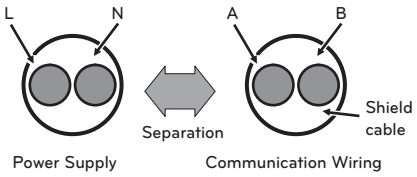

Zone and number setting of outdoor units

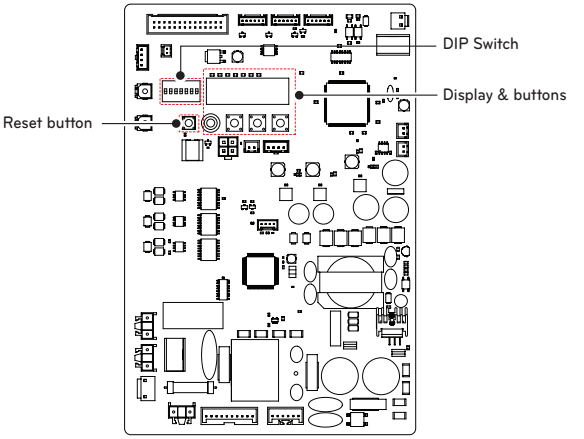

Step 1. Set DIP switch No. 5 to "ON" to set outdoor unit's zone and number.

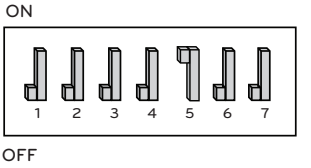

NOTE

The default setting of DIP switch is all OFF from 1 to 7.

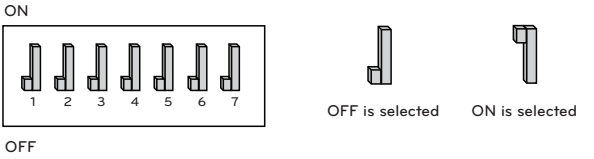

⚠ CAUTION

Turn off electric power supply before setting DIP switch

- Whenever adjusting DIP switch, turn off electric power supply to avoid electric shock.

Step 2. Turn on electric power supply. After supplying power, the display will light up. And set the outdoor unit's zone first.

Step 3. Select the mode using '▶', '◀' Button :"Func" Push the '●' button

Step 4. Select the mode using '▶', '◀' Button : "Fn8" Push the '●' button

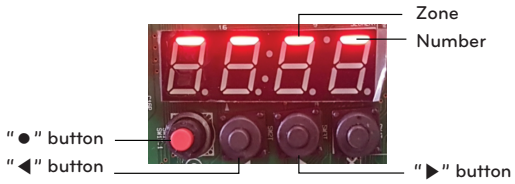

Step 5. Set the outdoor unit's zone using "▶", "◀" button. If you complete to set the outdoor unit's zone, press "●" button.

NOTE

Please refer to the table below for outdoor unit operation modes depending on the zone setting.

Zone	Mode	Cooling	Heating	DHW
0	Cooling + Heating + DHW	●	●	●
1	Cooling only	●		
2	Heating only		●	
3	DHW only			●
4	Cooling + DHW	●		●
5	Heating + DHW		●	●
6	Cooling + Heating	●	●	

Step 6. Set the outdoor unit's number using "▶", "◀" button. If you complete to set the outdoor unit's number, press "●" button.

NOTE

The number is a unique number of the outdoor unit, so it must not be duplicated.

Step 7. Turn off electric power supply. And Set DIP switch No. 5 to "OFF".

Step 8. Reassemble Front panel to the outdoor unit by fastening screws.

NOTE

You can see zone setting of outdoor units by using the remote controller.

• Main screen ⟶ Menu ⟶ Setting ⟶ Installer settings ⟶ Cascade ⟶ Group configuration

For setting the number of outdoor units and matching ODU address with outdoor unit's number, please refer to chapter 'Installer settings'

After zone and number setting of outdoor units

For example, if you set zone and number of 4 outdoor units like table below, it will operate like figure below.

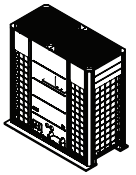

Outdoor Unit 1

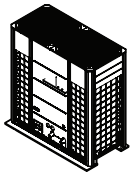

Outdoor Unit 2

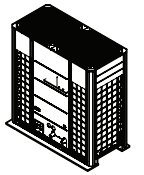

Outdoor Unit 3

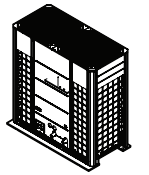

Outdoor Unit 4

		ODU 1		ODU 2		ODU 3		ODU 4	
ODU PCB segment		0	1	2	2	5	3	1	4
Note		Cooling+ Heating+ DHW	ODU #1	Heating	ODU #2	Heating+ DHW	ODU #3	Cooling	ODU #4
Operating	Heating	●		●		●			
	DHW	●				●			
	Cooling	●						●	

※ In order to use DHW or cooling function, DIP switch SW2 on IDU PCB must be set accordingly (refer to Configuration chapter).

- Case 1 : Heating

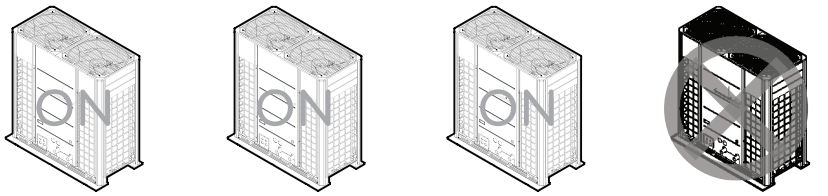

- Case 2 : DHW

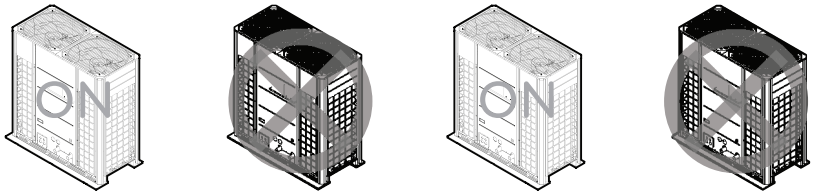

- Case 3 : Cooling

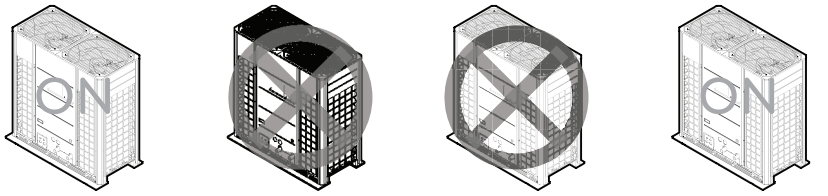

Terminal Block Information

Symbols used below pictures are as follows :

- L, L1, L2 : Live (230 V AC)
- N : Neutral (230 V AC)
- BR : Brown, WH : White, BL : Blue, BK : Black

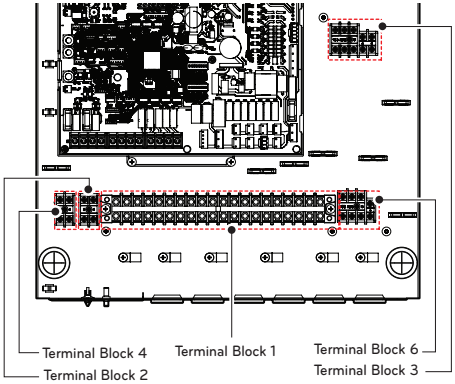

Terminal Block 1

1	2	3	4	5	6	7	8	9	10	11	12	13	14	15	16	17	18	19	20
		L	N	L	N	L	N	L1	L2	N	L	L1	N	L1	L2	N	L	N	
		WATER PUMP (C)		WATER PUMP (B)		MIX PUMP		MIX VALVE			3WAY VALVE (A)			2WAY VALVE (A)			WATER TANK HEATER		

- WATER PUMP (C): Energizing water pump for DHW-recirculation
- WATER PUMP (B): Energizing water pump for solar thermal system
- MIX PUMP / MIX VALVE: Power supply for 2nd circuit heating kit
- 3WAY VALVE (A): Water flow switching between space heating and DHW tank heating
- 2WAY VALVE (A): Closing other circuits during cooling operation
- WATER TANK HEATER: Turn on or off booster heater

Terminal Block 2

21	22
A	B
3rd PARTY CONTROLLER (5V DC)	

Connection for 3rd party controller or Modbus RTU or Metering module (5 V DC)

Terminal Block 3

23	24	25	26	27
L	N	L1	L2	L3
THERMOSTAT (Default : 230 V AC)				

Terminal Block 4

28	29
A	B
OUTDOOR UNIT	

Connection for communication

Terminal Block 6

1 (L)	2 (L)		⏚
L	N		⏚
POWER SUPPLY 220-240 V, 50 Hz			

Power supply for indoor unit

How to wire thermistor for Cascade control unit



Cascade inlet temperature sensor



Cascade outlet temperature sensor



Sensor Holder



Sensor Connector

Follow below procedures step 1 ~ step 4.

Step 1. Install sensor connector to main inlet/outlet pipe.
(Welding must be performed to connect the sensor connector to the pipe)

Step 2. Check if the power of the unit is turned off.

Step 3. Fasten the sensor connector to the sensor holder as shown in the figure below.

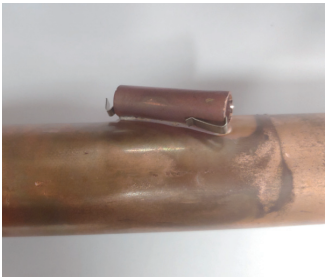

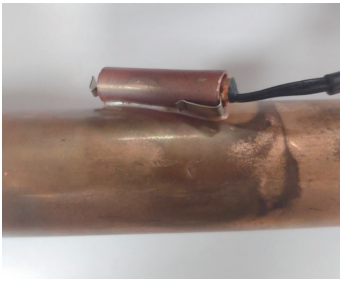

Step 4. Insert connector(Blue) of the cascade inlet temperature sensor to connector(Blue) of the middle link harness. Also Insert connector(Red) of the cascade outlet temperature sensor to connector(Red) of the middle link harness as shown below.

※ The middle link harness is inserted into PCB(CN_TH3).

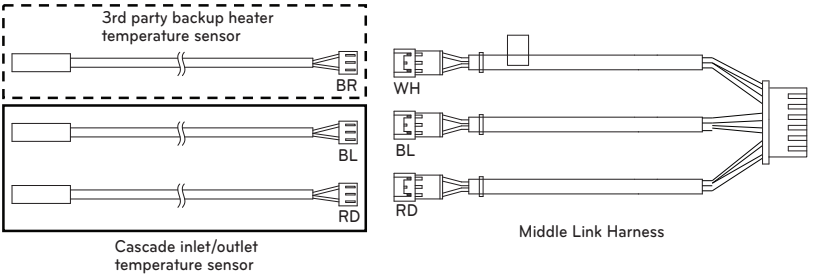

※ For more information about 3rd party backup heater temperature sensor, please refer to chapter '3rd party backup heater'.

WATER MANAGEMENT

Water pipe side strainer

For the protection of the water cooling type product, make sure to install strainer of 30 Mesh or more in the water side pipe.

Otherwise, heat exchanger may be damaged by the following conditions.

1 The water side in the plate type heat exchanger is formed by several small flow paths.

2 If strainer of 30 Mesh or more is not used, foreign object may block some flow paths.

3 As a result of the heat exchanger damage by freeze burst, the refrigerant is mixed with the water and the product becomes unusable.

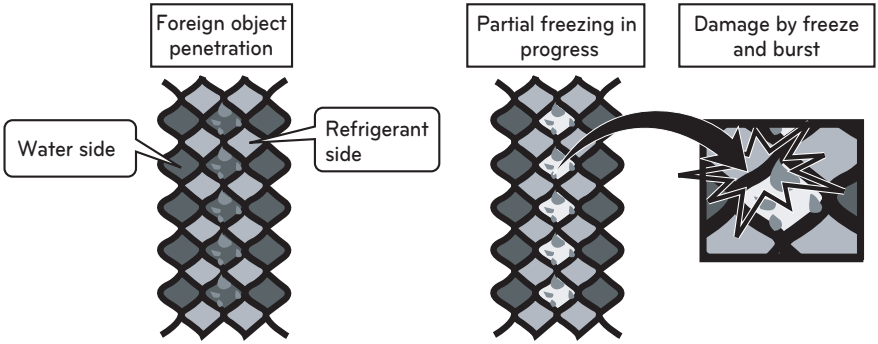

Actions for problems in the test operation

Category	Status	Cause	Inspection and Action
Whether water is supplied	CH 14	This error occurs when the flow amount is not detected properly.	Check blocking of the water pipe. (Strainer cleaning, valve locked, valve problem, air in the pipe, etc.)

Plate type heat exchanger maintenance

As scale generation is accumulated, plate type heat exchanger efficiency may be decreased or damage may occur by freeze and burst with decreased flow amount.

For such reasons, it is necessary to have periodical management to prevent scale generation.

1 Before entering the usage season, check the following items. (Period: 1 time per year)
- Perform water quality inspection to see if it is within the standard condition.
- Perform strainer cleaning.
- Check if the flow amount is adequate.
- Check if operation environment is adequate. (Pressure, flow amount, water outlet temperature, etc.)

2 To clean the plate type heat exchanger, follow the procedures below. (Period: 1 time per year)
- Check if service port is mounted on the water pipe for chemical solvent cleaning. 5% diluted formic acid, citric acid, oxalic acid(water acid), acetic acid, phosphoric acid, etc. are suitable as the chemical solvent for scale cleaning. (* Hydrochloric acid, sulfuric acid, nitric acid, etc. have corrosive property, so they may never be used.)
- During the cleaning, make sure if water inlet and outlet pipe gate valve and drain pipe valve are properly locked.
- Connect the pipe for chemical solvent cleaning through water pipe service plug, fill the cleaning solvent of about 50 °C ~ 60 °C in the plate type heat exchanger, and circulate with pump for about 2 ~ 5 hours. The circulation time may be different according to the cleaning solvent temperature or amount of scale. Therefore, closely observe the chemical solvent color changes to decide the circulation time for scale removal.
- After the solvent circulation work, completely drain the chemical solvent in the plate type heat exchanger, fill 1~2 % concentration sodium hydroxide (NaOH) or hydrocarbon sodium ($NaHCO_3$) and circulate for about, 15~20 min. to neutralize the heat exchanger.
- After the neutralization work is completed, clean inside the plate type heat exchanger with clean water. By measuring the pH concentration of the water, you can verify if the chemical solvent is properly removed.
- If you use other type of chemical solvent in the market, make sure to check if there is any corrosive property against stainless or copper in advance.
- Receive consultation from the experts in the relevant industry for details of cleaning chemical solvent.

3 After cleaning work is completed, operate the product to see if it works properly once again.

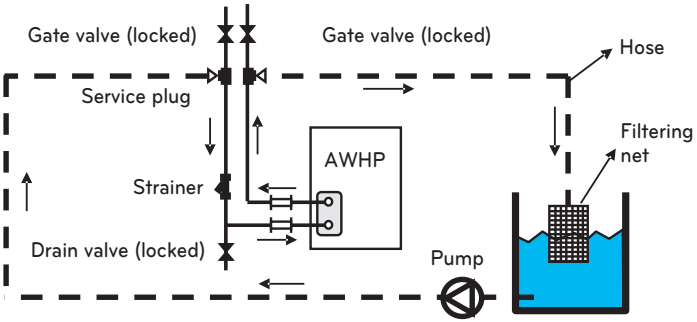

[Plate type heat exchanger cleaning]

Daily inspection management

Water quality management

Plate type heat exchanger does not have the structure for disassembly, cleaning, or parts replacement. To prevent corrosion or scale accumulation in the plate type heat exchanger, you have to take a special caution for water quality management. Water quality shall satisfy the minimum suggested water quality category standard. If corrosion prevention solution or corrosion restraining solution is added, you have to use ingredients with no corrosive property against stainless and copper. To prevent the contamination of the circulation water by external air, it is recommended to periodically drain the water inside the water pipe and fill water again even if the circulation water is not contaminated.

Flow amount management

If the flow amount is insufficient, freeze and burst may occur in the plate type heat exchanger. Check if strainer is blocked or filled with air, and check whether flow amount is insufficient by checking the difference of temperature or pressure between the outdoor unit inlet and outlet water pipe. If there is a difference of temperature or pressure above appropriate level, it shows that the flow amount is decreased, so immediately stop the operation and remove the cause before the re-operation.
(* If there is an air, make sure to perform purge work. The air inside water pipe hinders the water circulation to cause flow amount insufficiency, and it may also cause freeze and burst.)

Brine concentration management

If Brine(antifreeze) is used in the water, use the designated type and concentration.
Calcium chloride Brine causes corrosion of the plate type heat exchanger, so it may not be used.
If the antifreeze is left alone, it absorbs moisture from the air and the concentration will decrease and may lead to freeze and burst of the plate type heat exchanger, so minimize the contact area with air and periodically measure the concentration of Brine, and maintain the concentration of Brine by adding Brine as necessary.

Inspection category \ Period (year)	1	2	3	4	5	6	7	8	9	10	11	12	13	14	15
Product operation status	●	●	●	●	●	●	●	●	●	●	●	●	●	●	●
Heat exchanger cleaning	●	●	●	●	●	●	●	●	●	●	●	●	●	●	●
Strainer cleaning	●	●	●	●	●	●	●	●	●	●	●	●	●	●	●
Water quality inspection	●	●	●	●	●	●	●	●	●	●	●	●	●	●	●
Refrigerant leakage inspection	●														●

⚠ CAUTION

- The above inspection table sets the minimum period, and more frequent inspections are necessary according to installation environment, operation condition / water quality condition.
- During the heat exchanger cleaning, you have to take off the parts such as pressure gauge or lock the valve so that chemical solvent may not enter.
- During the cleaning, check the pipe connection parts in advance to prevent leakage of the chemical solvent.
- Start the cleaning work after the chemical solvent and water are sufficiently mixed.
- It is better to perform the heat exchanger cleaning work in the early stage, and when the scale accumulation becomes severe, it becomes difficult to remove them.
- In the region with poor water quality, periodical cleaning works are necessary.
- Chemical solvent has strong acidic property, so it shall be completely washed with water.
- To verify if the inside became clean, remove the hose and check inside the pipe.
- Make sure to perform the air purge to remove air inside water pipe.
- After the inspection, make sure to check if the water properly flows before restarting the product.

Water Charging

For water charging, please follow below procedures.

Step 1. Open all valves of whole water circuit. Supplied water should be charged in the under floor water circuit, sanitary water tank circuit, FCU water circuit, and any other water circuits controlled by the product.

Step 2. Connect supply water into drain valve and fill valve.

Step 3. Start to supply water. While supplying water, following should be kept.
- Pressure of supplying water should be pre-adjust value approximately.
- For supplying water pressure, time to be taken from 0 bar to pre-adjust value should be more than 1 minute. Sudden water supply can yield water drain through safety valve.
- Fully open the cap of air vent to assure air purging. If air is exist inside the water circuit, then performance degrade, noise at the water pipe, mechanical damage at the surface of electric heater coil.
- Open both the air vent in the water pipe and the air vent in the pump.

Step 4. Stop water supplying when the pressure gauge located in front of the control panel indicates pre-adjust value. Stop water supplying when the pressure located in remote control indicates pre-adjust value.

Step 5. Close drain valve and fill valve. Then wait for 20~30 seconds to observe water pressure being stabilized.

Step 6. If following conditions are satisfactory, then check the pipe insulation. Otherwise, go to step 3.
- Pressure gauge indicates pre-adjust value. Note that sometimes pressure in decreased after step 5 due to water charging inside expansion vessel.
- No air purging sound is heard or no water drop are popping out from air vent.

Step 7. After charging water is done make sure that all air vents inside the building are capped and no release of air can happen anymore.

The air valve cap on the pump must also be closed.

The Cap on the air separator inside the outdoor unit must always be kept open to make sure no R32 can enter the building in case of leakage.

⚠ CAUTION

Keep the air vent of the water pipe open and keep the air vent of the pump closed.
Otherwise, the pump may make noise. Close all air vents once water is spilled from the vents.

Pipe Insulation

Purpose of water pipe insulation is :

- To prevent heat loss to external environment
- To prevent dew generation on the surface of the pipe in cooling operation
- Minimum insulation thickness recommendations
  ensure correct operation of the product, but local regulations may vary and must be followed.
- If cooling function is used, the type of insulation must be suited for cold water and all joints must be sealed tightly to prevent that the insulation becomes wet from the inside.

Water Piping length (m)	Minimum insulation Thickness(mm)
<20	20
20~30	30
30~40	40
40~50	50

* λ = 0.04 W/mk (Thermal conductivity of pipe insulation)

Water head loss curve

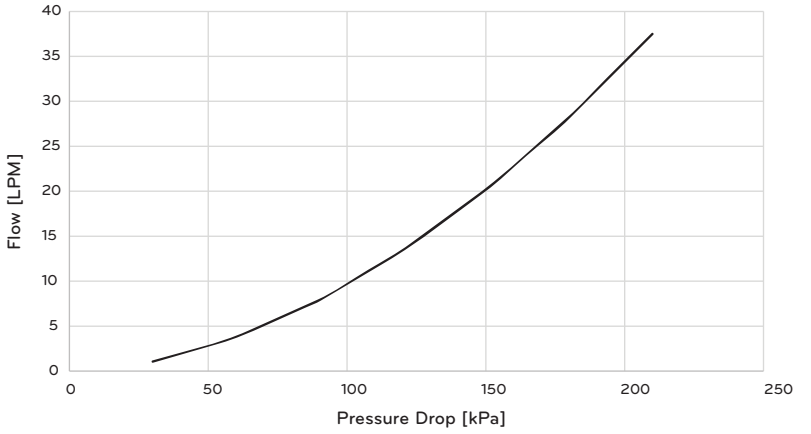

Cold water management

The water quality of the cold (hot) water is described as follows.
The water quality must not fall below the following standard. If so, it can be judged to have risk within relatively short period of time.

[HM513MR]

Item		Cold water	
		Circulation type cold water	Cold water
Reference	PH(25 °C)	6.5 - 8.0	6.5 - 8.0
	Conduction rate (25 °C μs/cm)	500 or below	200 or below
	Alkali level (PPM)	100 or below	50 or below
	Hardness (PPM)	100 or below	50 or below
	Chlorine ion (PPM)	100 or below	50 or below
	Lactic acid ion (PPM)	100 or below	50 or below
	Iron (PPM)	0.1 or below	0.3 or below
	Sulfur ion (PPM)	Not detected	Not detected
	Ammonium ion (PPM)	0.5 or below	0.2 or below
	Silica (PPM)	50 or below	30 or below

Operating maximum pressure (kPa)	Minimum water volume (L)
980	345

- To maintain stable operation and outlet temperature, the minimum amount of water must be secured.
- Be sure to use cold water piping system accessories that have a water pressure higher than the design.

ACCESSORIES INSTALLATION

This product can interface to various accessories to extend its functionality and to improve user convenience. In this chapter, specifications about supported 3rd party accessories and how to connect to this product is introduced.

It is noted that this chapter only deal with 3rd party accessories. For accessories supported by LG Electronics, please refer to installation manual of each accessories.

Accessories supported by LG Electronics

Item	Purpose	Model
Simple dry contact	To receive on & off external signal	PDRYCB000
Thermostat Dry contact	Dry Contact For Thermostat	PDRYCB320
Solar Thermal Kit	To operate with solar heating system	PHLLA
Thermistor for Water Tank (DHW Tank)	To control hot water temperature of DHW tank	PHRSTA0
Meter Interface*	To measure production / consumption power	PENKTH000
Wall-mounted outdoor air temp. sensor	To control Automatically operation with more accurate outdoor temperature The basic outdoor temperature sensor is located in the back of ODU. It is especially affected by sunlight during the day.	PHATS0
Wi-Fi Modem	To enable remote system operation from smartphone	PWFMDD200
Wi-Fi Extension Cable	To connect with Wi-Fi modem to the USB cable	PWYREW000

* Only one device can be connected at a time.

Item	Purpose	Model
Thermistor for 2nd Circuit	To interlock with 2nd circuit operation and control temperature of mixing circuit or to interlock with 3rd party electric backup heater and control its outlet temperature.	PRSTAT5K10
Extension wire	To extend the Remote controller wire by 10 m.	PZCWRC1
3 way valve	To divert water flow between space heating and DHW heating	OSHA-3 V
Thermostatic mixing valve	To blend hot water with cold water for ensuring constant, safe shower and bath outlet temp.	OSHA-MV OSHA-MV1

* Only one device can be connected at a time.

⚠ CAUTION

- Install the drain pan when cooling.
- If not installed, water may form.
- Please refer to separate installation manual when installing drain pan.

Accessories supported by 3rd party Companies

Item	Purpose	Specification
Solar Heating System	To generate auxiliary heating energy for water tank	• Solar collector • Solar pump • Solar Thermal Sensor : PT1000
Thermostat	To control by room air temperature	Heating-Only type (230 V AC) Cooling/Heating type (230 V AC with Mode selection switch)
Mix Kit	To use 2nd Circuit	• Mixing valve • Mix pump
3rd Party Boiler	To use auxiliary boiler.	
3rd Party Controller*	To connect external controller using modbus protocol	Modbus RTU, 9600 bps, Stopbit 1, Parity none
3way valve and actuator	(A) : To control water flow for hot water heating or floor heating / To control water flow when installing 3rd party boiler (B) : To control close/open mode of solar circuit	3 wire, SPDT (Single Pole Double Throw) type, 230 V AC
External Pump	To control the water flow at the product	
Smart Grid	To control operation mode depending on input signal from provider	2 x 230VAC
3rd Party ESS*	To control the operation mode according to the energy storage state	Modbus RTU
Antifreeze valve	To protect the pipes against freezing	
DHW Recirculation Pump	To control the water flow of DHW recirculation pump	

* Only one device can be connected at a time.

Before Installation

⚠ WARNING

Followings should be kept before installation

- Main power must be turned off during installing accessories.
- 3rd party accessories should be comply with supported specification.
- Proper tools should be chosen for installation.
- Never do installation with wet hands.

Thermostat

Thermostat is generally used to control the product by air temperature. When thermostat is connected to the product, the product operation is controlled by the thermostat.

Installation condition

⚠ CAUTION

- USE 220-240 V~ Thermostat
- Some electro-mechanical type thermostat has internal delay time to protect compressor. In that case, mode change can takes time more than user's expectation. Please read thermostat manual carefully if the unit does not response quickly.
- Setting temperature range by thermostat can be different with that of the unit. The heating or cooling set temperature should be chosen within the setting temperature range of the unit.
- It is highly recommended that the thermostat should be installed where space heating is mainly applied.

Following location should be avoid to secure proper operation :

- Height from floor is approximately 1.5 m.
- Thermostat can not be located where the area may be hidden when door is open.
- Thermostat can not be located where external thermal influence may be applied. (such as above heating radiator or open window)

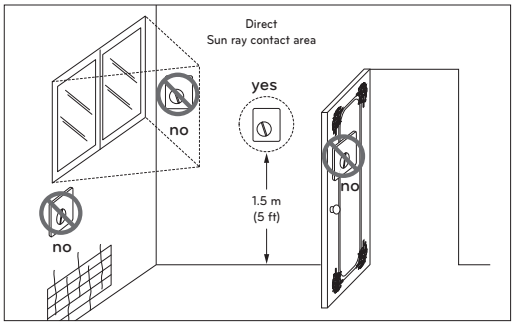

Thermostat

General Information

The Heat Pump supports following thermostats.

Type	Power	Operating Mode	Supported
Mechanical (1)	230 V~	Heating Only (3)	Yes
		Heating / Cooling (4)	
		Heating / Cooling / DHW Heating (5)	
Electrical (2)	230 V~	Heating Only (3)	Yes
		Heating / Cooling (4)	
		Heating / Cooling / DHW Heating (5)	

(1) There is no electric circuit inside the thermostat and electric power supply to the thermostat is not required.

(2) Electric circuit such as display, LED, buzzer, etc is included in the thermostat and electric power supply is required.

(3) Thermostat generates "Heating ON or Heating OFF" signal according to user"s heating target temperature.

(4) Thermostat generates both "Heating ON or Heating OFF" and "Cooling ON or Cooling OFF" signal according to user"s heating and cooling target temperature.

(5) Thermostat generates "Heating ON or Heating OFF", "Cooling ON or Cooling OFF", "DHW Heating ON or DHW Heating OFF" signal according to user's heating, cooling and DHW heating target temperature.

⚠ CAUTION

Choosing heating / cooling thermostat

- Heating / cooling thermostat must have "Mode Selection" feature to distinguish operation mode.
- Heating / cooling thermostat must be able to assign heating target temperature and cooling target temperature differently.
- If above conditions are not kept, the unit can not operation properly.
- Heating / cooling thermostat must send cooling or heating signal immediately when temperature condition is satisfied. No delay time while sending cooling or heating signal is permitted.

How to wire Heating / Cooling / DHW Heating thermostat

Follow below procedures Step 1 ~ Step 3.

Step 1. Uncover front cover of the unit and open the control box.

Step 2. Identify the power specification of the thermostat. If it is 220-240 V~, go to Step 3.

Step 3. Find terminal block and connect wire as below.

TB 1

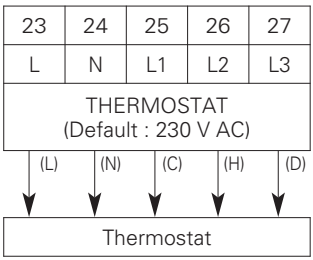

(L) : Live signal from PCB to thermostat
(N) : Neutral signal from PCB to thermostat
(C) : Cooling signal from thermostat to PCB
(H) : Heating signal from thermostat to PCB
(D) : DHW Heating signal from thermostat to PCB

⚠ WARNING

Mechanical type thermostat.
Do not connect wire (N) as mechanical type thermostat does not require electric power supply.

⚠ CAUTION

Do not connect external electric loads.
Wire (L) and (N) should be used only for operation electric type thermostat.
Never connect external electric loads such as valves, fan coil units, etc.
If connected, Main PCB (Heater) can be seriously damaged.

Final check

DIP switch setting :
- Set DIP switch No. 8 to 'ON'. Otherwise, the unit can not recognize the thermostat.

Remote Controller :
- 'Thermostat' text is displayed on the remote controller.
- Only the water temperature setting is available and the other button input is prohibited.
- In case of Heating / Cooling / DHW Heating thermostat, select 'Heat&Cool / DHW' as the Thermostat Control Type in the remote controller installer settings.
- The product operates according to Thermo On / Off conditions of the thermostat and remote controller.

Thermo On / Off Condition		Product
Thermostat	Remote Controller	
Thermo Off	Thermo Off	Thermo Off
Thermo Off	Thermo On	Thermo Off
Thermo On	Thermo Off	Thermo Off
Thermo On	Thermo On	Thermo On

2nd Circuit

The 2nd circuit is a function that can separately control the circuit1 requiring high temperature and the circuit 2 requiring medium temperature, you need to prepare a separate Mix Kit.
The mix kit must be installed in the circuit 2.

[Install Guide Mixing circuit Heating]

Circuit 2 / Circuit 1	Floor (35°C)	Convector (FCU, 45 °C)	Radiator (45 °C)	Radiator (55 °C)
Floor (35 °C)	×	×	×	×
Convector (FCU, 45 °C)	○	×	×	×
Radiator (45 °C)	○	○	×	×
Radiator (55 °C)	○	○	○	×

[Install Guide Mixing circuit Cooling]

Circuit 2 / Circuit 1	Floor (18 °C)	Convector (FCU, 5 °C)
Floor (18 °C)	×	×
Convector (FCU, 5 °C)	○	×

※ Heating circuits that are not designed for carrying cooling water must be blocked by the 2-way-valve.

NOTE

Circuit 1 = Direct circuit : Zone where the water temperature is highest when heating

Circuit 2 = Mixing circuit : The other zone

How to Wire Mixing Kit

Follow below procedures Step 1 ~ Step 3.

Step 1. Uncover front cover of the unit.

Step 2. Find terminal block and connect wire as below

TB 1

7	8	9	10	11
L	N	L1	L2	N
MIX PUMP		MIXING VALVE		

(L) (N) (L1) (L2) (N1)

MIX PUMP	MIXING VALVE

(L) : Live signal from PCB to mix pump

(N) : Neutral signal from PCB to mix pump

(L1) : Live signal (for Normal* Closed type) from PCB to mixing valve

(L2) : Live signal (for Normal Open type) from PCB to mixing valve

(N1) : Neutral signal from PCB to mixing valve

*Closed = NOT Mixed

Step 3. Insert the temperature sensor to 'CN_MIX_OUT' (Brown) of the main PCB as shown below. The sensor should be mounted correctly to discharge pipe of mix pump as shown below.

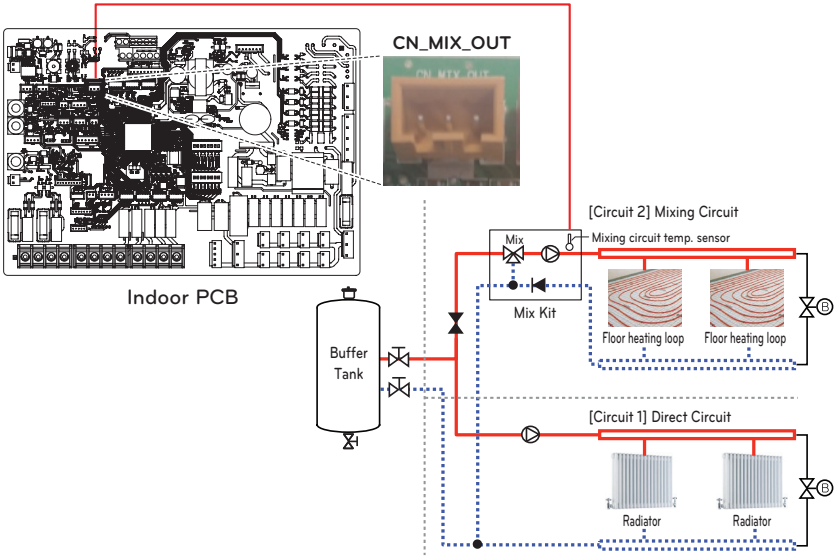

NOTE

- The location of the external pump may vary depending on the installer settings.
- Temperature sensor specification:
  LG-accessory PRSTAT5K10 at 25 °C : 5 kΩ
  Minimum operating temperature range : -30 °C~100 °C

[Thermistor for Mixing circuit]



Sensor



Sensor Holder



Sensor Connector

Follow below procedures step 1 ~ step 4.

Step 1. Install sensor connector to discharge pipe of mix pump.
(Welding must be performed to connect the sensor connector to the pipe)

Step 2. Check if the power of the unit is turned off.

Step 3. Fasten the sensor connector to the sensor holder as shown in the figure below.

Step 4. Insert harness into PCB(CN_MIX_OUT) fully and fix the thermal sensor into tube connector as shown below.

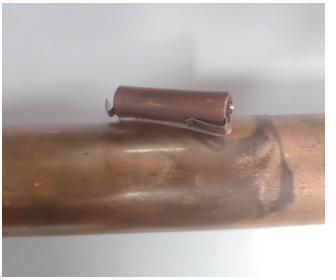

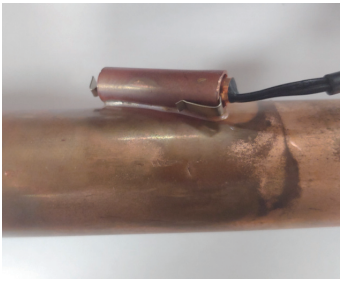

3rd Party Backup heater

The product can be used by connecting an Auxiliary Backup heater. You can control the Backup heater automatically and manually by comparing the water out temperature of Backup heater and the set temperature.

How to install 3rd party Backup heater


Sensor


Sensor Holder


Sensor Connector

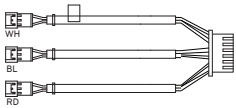

Middle Link Harness

Follow below procedures Step 1 ~ 5.

Step 1. Install sensor connector to outlet pipe of Backup heater.
(Welding must be performed to connect the sensor connector to the pipe)

Step 2. Check if the power of the unit is turned off.

Step 3. Fasten the sensor connector to the sensor holder as shown in the figure below.

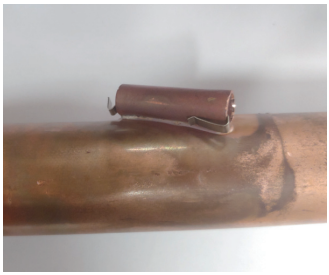

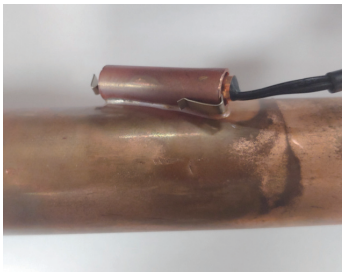

Step 4. Insert connector of the 3rd party backup heater temperature sensor to connector(White) of the middle link harness as shown below.

※ The middle link harness is inserted into PCB(CN_TH3).

3rd party backup heater temperature sensor

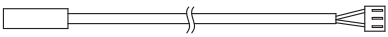

Middle Link Harness

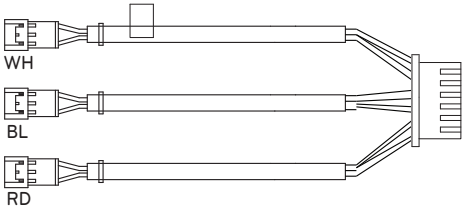

Step 5. Connect Power cable to the terminal block 'TB_HEATER_CONTACT' using the Magnetic Contactor.

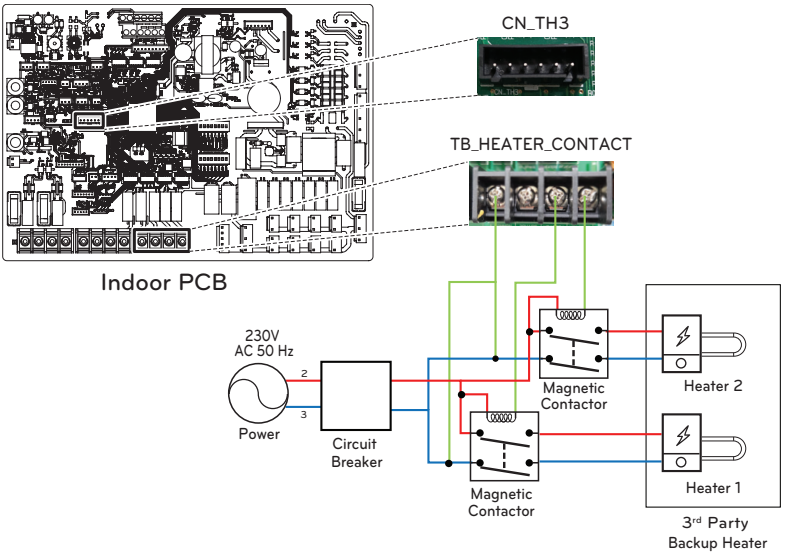

Item	Phase	Function	
3rd party Backup heater	1Ø	2 step	1 step (Heater 1 or Heater 2) 2 step (Heater 1 and Heater 2)
	3Ø	2 step	1 step (Heater 1 or Heater 2) 2 step (Heater 1 and Heater 2)

※ Select a circuit breaker and power cable suitable for 3rd party backup heater capacity.

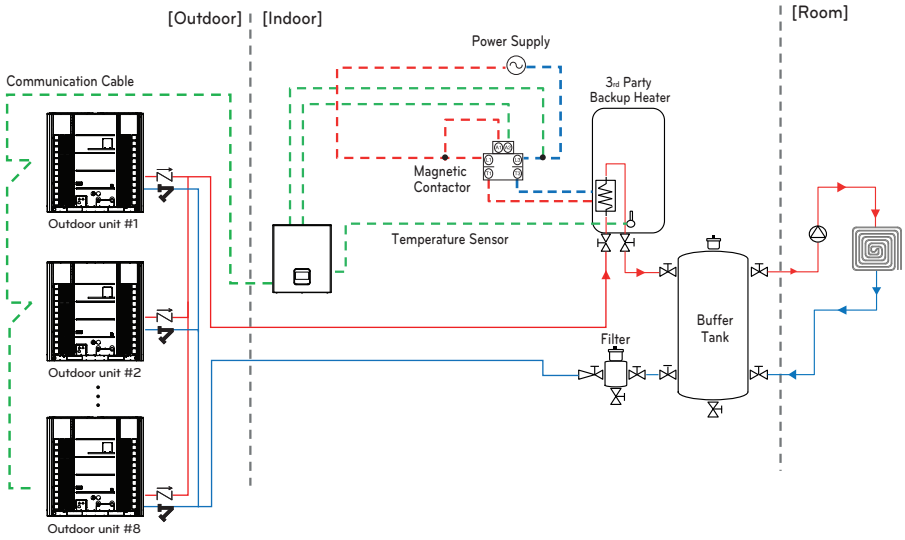

External Pump	Thermostatic Valve	Strainer
Safety Valve	2Way Valve (Manual)	Check Valve
2Way Valve (Signal)	Air vent	Floor Heating

⚠ CAUTION

- Accessory Heater sensor must be connected for use.
- Install the accessory heater sensor so that it can sense the water outlet temperature of the backup heater. If not, the product may malfunction.
- When connecting to the heater, please refer to the control method below and connect with safety.

3rd Party Boiler

The product can be used by connecting an Auxiliary boiler.

3rd party boiler can be enabled/disabled by manually via remote controller or automatically itself by means of comparing the outside air temperature and the pre-set temperature. Only Bivalent-alternative operation is possible.

While boiler is enabled, it must operate by its own controls.

How to wire 3rd party boiler

Follow below procedures step 1 ~ step 3.

Step 1. Check if the power of the unit is turned off.

Step 2. Disassemble front panels and Distinguish terminal block in Indoor PCB.

Step 3. Connect Power cable to terminal block (TB_BOILER) fully.

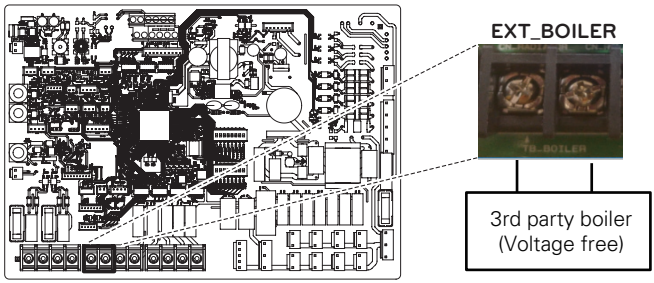

Indoor PCB

3rd Party Controller

The product can also be linked to 3rd party controller using Modbus RTU. Various datapoints and setting options are available through Modbus protocol. Contact your authorized dealer for more information.

How to wire 3rd party controller

Follow below procedures step 1 ~ step 4.

Step 1. Check if the power of the unit is turned off.

Step 2. Disassemble front panels and distinguish control box(Indoor) of the unit.

Step 3. Check if the harness(White) is inserted fully to the Indoor unit PCB (CN_MODBUS).

Step 4. Connect the 3rd party controller to terminal block 2(21/22) completely.

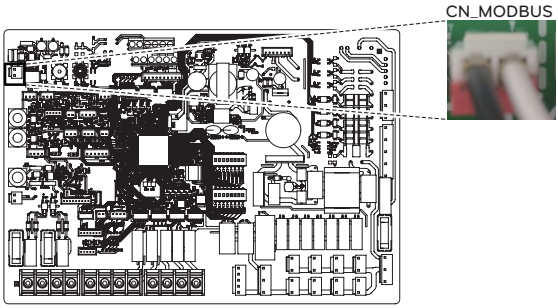

Indoor PCB

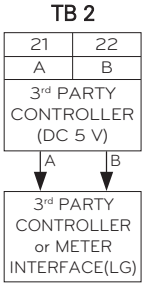

NOTE

- If CN_MODBUS port is used to interlink with LG metering module, a 3rd-party controller cannot be connected at the same time.

Meter Interface

This accessory (PENKTH000) can be used to connect 3rd-party wattmeter (max. 3) using pulse input or Modbus and one heatmeter using pulse input.

The consumed electric power and/or produced thermal energy is displayed on the remote controller.

How to install Meter Interface

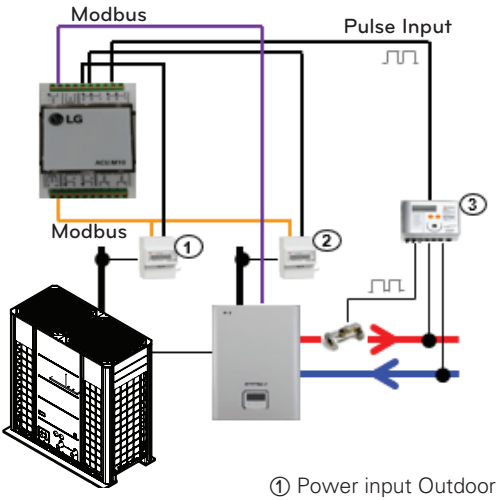

① Power input Outdoor unit
② Power input Backup heater
③ Thermal output Indoor unit

[Parts of Meter interface]

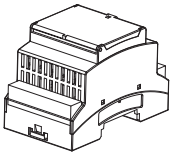

Meter interface body

Follow below procedures step 1 ~ step 4.

Step 1. Check if the power of the unit is turned off.

Step 2. Disassemble front panels and Distinguish control box(Indoor) of the unit.

Step 3. Check if the harness(White) is inserted fully to the indoor unit PCB (CN_MODBUS).

Step 4. Connect the external pump to terminal block 2(21/22).

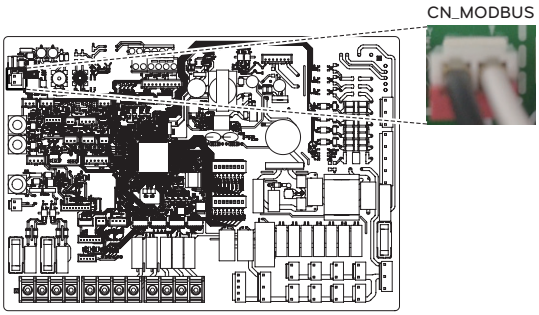

Indoor PCB

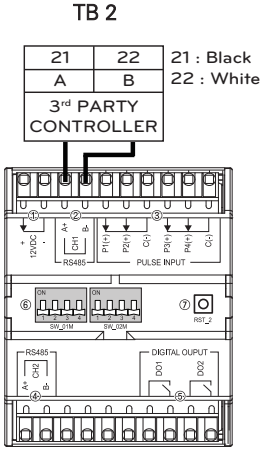

Meter interface

NOTE

- If CN_MODBUS port is used to interlink with 3rd-party controller, the metering module cannot be connected at the same time.
- Refer to manual of PENKTH000 for more information.

DHW Tank

To establish DHW circuit, 3way valve and DHW sensor (PHRSTA0) or is required.

Installation condition

Installing DHW tank following considerations :

- DHW tank should be located at the flat place.
- Water quality should be complied with EN 98/83 EC directives.
- As this water tank is sanitary water tank (indirect heat exchange), do not use anti water-freezing treatment like ethylene glycol.
- It is highly recommend to wash out inside of the DHW tank after installation. It ensures generating clean hot water.
- Near the DHW tank there should be water supply and water drain for easy access and maintenance.
- Set the maximum value of the temperature control device of DHW tank.
- Make sure that the 3way-valve can carry the high water flow rate.

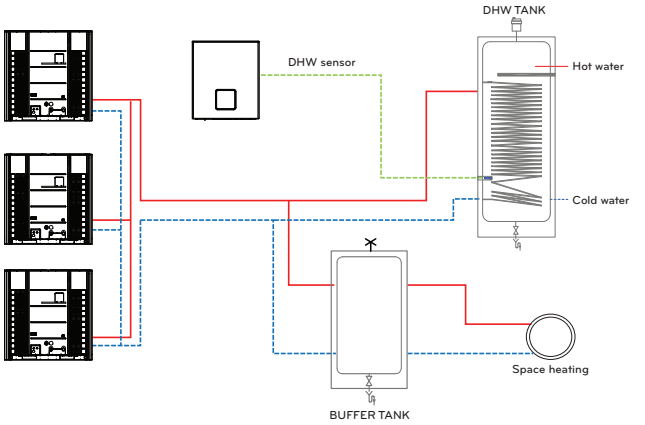

※ For detailed connection refer to manufacturer's manual of the DHW tank.

⚠ WARNING

The schematic does not include all necessary safety devices. For details refer to Hydronic schemes provides by local LG office.

General Information

THERMA V supports following 3way valve.

Type	Power	Operating Mode	Supported
SPDT [1] 3-wire	230 V AC	Selecting Flow A[2] between Flow A and Flow B	Yes
		Selecting Flow B[3] between Flow A and Flow B	Yes

1) SPDT = Single Pole Double Throw. Three wires consist of Live1 (for selecting Flow A), Live 2 (for selecting Flow B), and Neutral (for common).

2) 'Flow A' means water flow from the unit to space heating circuit.

3) 'Flow B' means water flow from the unit to DHW tank.

Installing recirculation pump

A DHW recirculation pump can be connected to increase comfort, as warm water will immediately available when opening the tap.

- To limit the energy consumption, external time scheduler to determine when the recirculation pump should turn on and turn off is required.
- The operating duration time of the recirculation pump is calculated as follow :
  Duration time [minute] = k x V / R
  k : 1.2 ~ 1.5 is recommended. (If distance between pump and tank is far, then choose high number)
  V : Volume of DHW tank [liter]
  R : Water flow rate of pump [liter per minute], which is determined by pump performance curve.
- The pump operating start time should be prior to the DHW demand.

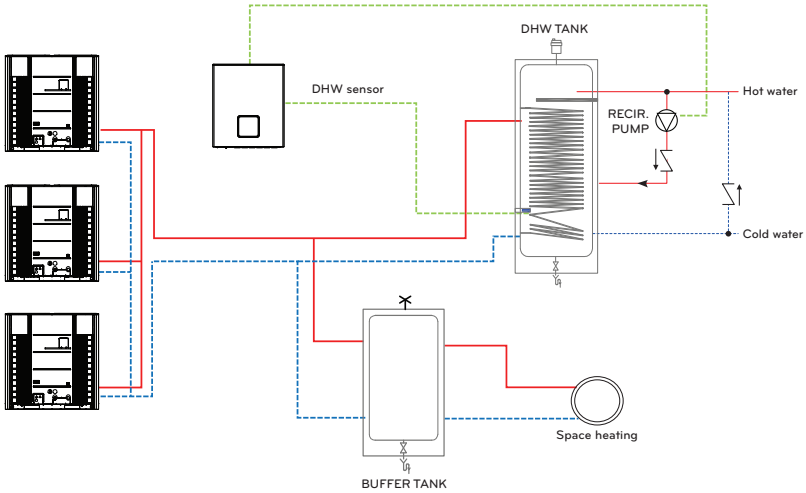

※ Water In / Water Out installation scene may vary depending on the model.

⚠ WARNING

The schematic does not include all necessary safety devices. For details refer to Hydronic schemes provides by local LG office.

How to wire recirculation pump

Follow below procedures step 1 ~ step 4.

Step 1. Check if the power of the unit is turned off.

Step 2. Disassemble front panels and distinguish control box(Indoor) of the unit.

Step 3. Check if the harness(Violet) is inserted fully to the Indoor unit PCB (CN_PUMP_A15).

Step 4. Connect the DHW recirculation pump to terminal block 1(3/4).

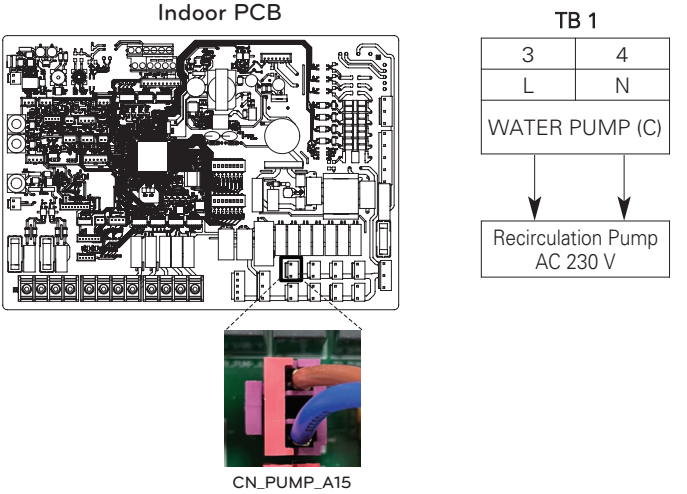

⚠ CAUTION

When connecting a pump of 1.05A or higher, its output must be used as a signal line only.

How to install 3rd party DHW boost heater

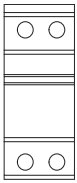

Circuit breaker

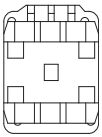

Magnetic switch



Sensor

Temperature sensor for DHW tank is used to control hot water temperature of DHW tank.

Follow below procedures step 1 ~ step 4.

Step 1. Insert DHW tank sensor to 'CN_TH4' (Red) of the Main PCB as shown below.

Step 2. Insert the sensor probe into the sensor pocket of the DHW tank.

Step 3. Connect the Magnetic switch with TB1. (Fig. 2)

Step 4. Connect the Circuit breaker with Magnetic switch. (Fig. 2)

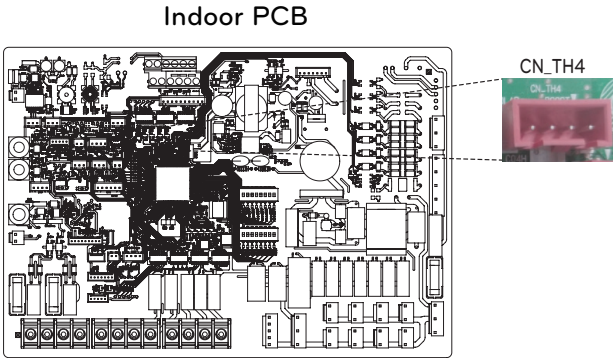

Fig. 1

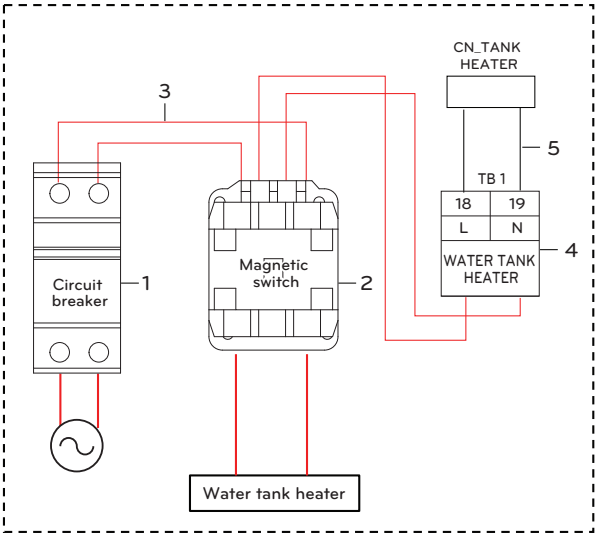

Fig. 2

No	Name	Note
1	Circuit breaker	Field-supplied item
2	Magnetic switch	Field-supplied item
3	Wire	Field-supplied item
4	Terminal block	Delivered item
5	Multi harness	Delivered item

NOTE

- Select a circuit breaker and power cable suitable for 3rd party DHW boost heater capacity.

Adjusting thermostat temperature

- To guarantee proper operation, it is recommended to set temperature of thermostat to maximum temperature.

Solar Thermal Kit

This product can be used by connecting the solar thermal kit in the field. It can be utilized hot water heated by solar thermal system. End-user must be install solar thermal kit accessory(PHLLA) provided by LG.

How to Install Solar Thermal Kit

[Parts of Solar Thermal Kit]



Sensor Holder

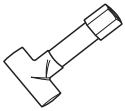

Tube Connector



Solar Thermal Sensor

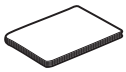

Installation Manual

Follow below procedures step 1 ~ step 4.

Step 1. Check if the power of the unit is turned off.

Step 2. Disassemble front panels and distinguish control box(Indoor) of the unit.

Step 3. Install 3rd-party PT1000 sensor at outlet of Solarthermal collector. Tube connector and sensor holder might be used if necessary. Connect the sensor-wire at port CN_SOLAR.

Step 4. Install tank sensors provided with the kit at top (WATER TANK SENSOR) and bottom (SOLAR PIPE SENSOR) and insert the connector at port CN_TH4 on IDU-PCB.

NOTE

- If single DHW-sensor is already connected at port CN_TH4, disconnect first, before connecting the double-sensor.

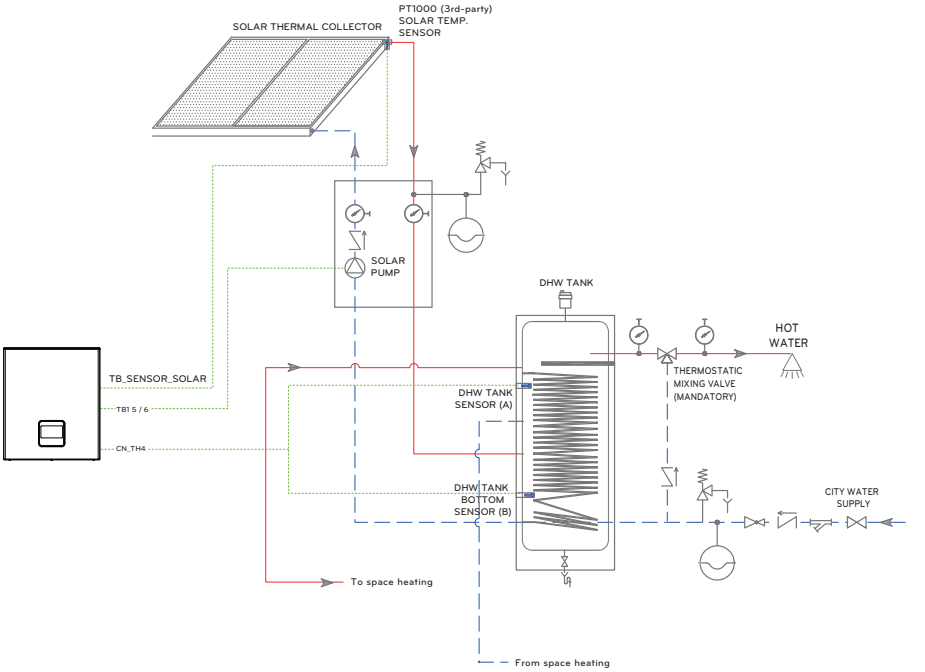

* Water In / Water Out installation scene may vary depending on the model.

Insert sensor until the cable tie as shown below.



CAUTION

Sensor mounting

Insert sensor into sensor socket and bolt it tightly.

Dry Contact

Dry Contact is a solution for automatic control of HVAC system at the owner's best. In simple words, it's a switch which can be used to turn the unit On/Off after getting the signal from external sources.

How to install dry contact

[Parts of Dry contact]



Dry Contact body



Cable(for connecting with IDU)

Follow below procedures step 1 ~ step 4.

Step 1. Check if the power of the unit is turned off.

Step 2. Disassemble front panels and distinguish terminal block in Indoor PCB.

Step 3. Connect cable to the unit PCB(CN_CC) fully.

Step 4. Then, Insert harness to the dry contact PCB(CN_INDOOR) firmly as shown below.

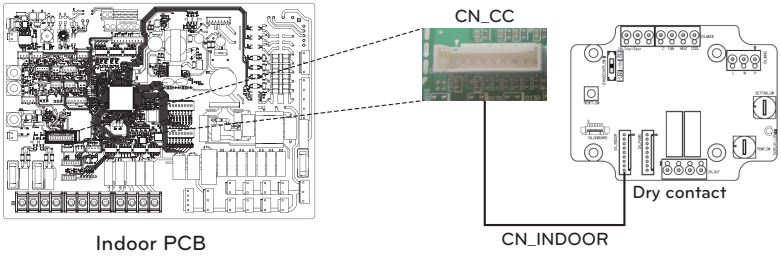

NOTE

- For more information about installing Dry Contact, Please refer installation manual provided with Dry Contact.
- For more settings about Dry Contact, Please refer to "Dry Contact Mode / CN_CC / CN_EXT" that installer setting part.

[Setting of Contact Signal Input]

• For input contact closure only(No power input)

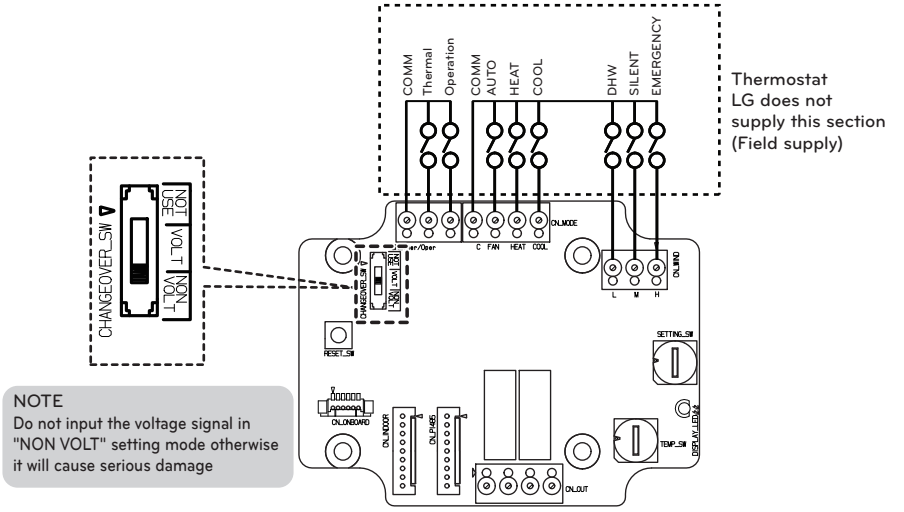

• For input contact voltage : DC 12 V, 24 V~

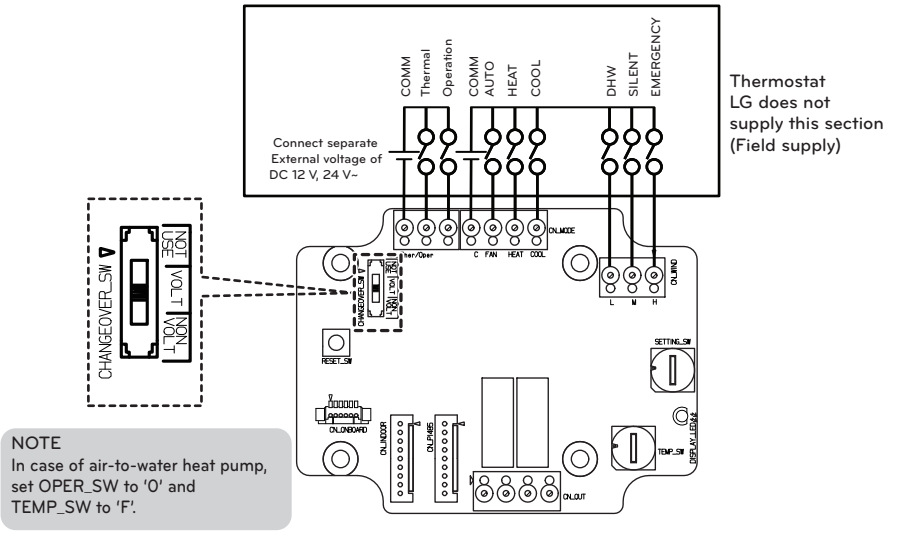

Setting_SW Setting

- Normal (0) : Possible to be controlled by the remote controller.
- Forced (1) : Not possible to be controlled by the remote controller.
- There is no OPER_SW setting that each input signal is disabled.

External Controller - Setting up programmable digital input operation

If you require to control depending on external digital input(ON/OFF), connect cable to indoor PCB(CN_EXT).

Follow below procedures step 1 ~ step 4.

Step 1. Check if the power of the unit is turned off.

Step 2. Disassemble front panels and distinguish control box(Indoor) of the unit

Step 3. Connect the external controller to PCB(CN_EXT) completely.

Step 4. Connect the cable and field installation part.

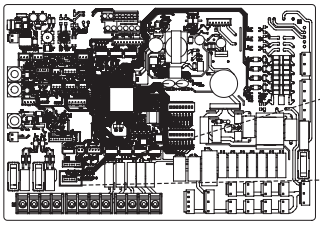

Indoor PCB

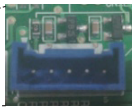

CN_EXT

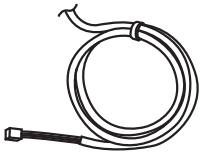

Adapter Cable

*Delivered part

Installation example #1

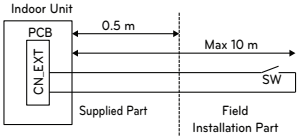

- SW : Single pole switch
  - Select a part with contacts for extremely low amperage
  - DC 5 V ~ 12 V is used at the contact point
  - Switch load is approximately 0.5 ~ 1 mA
- Control cable
  - Cable size : 22 to 26 AWG
  - Don't extend the cable more than 10 meters

Installation example #2

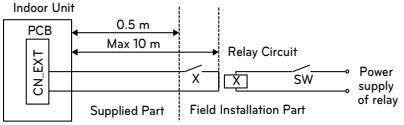

- X : Relay (a point of contact, fixed DC 0.5 ~ 1 mA)
- SW : Distance ON/OFF switch
- Control cable (Indoor unit to Relay Circuit)
  - Cable size : 22 to 26 AWG
  - Don't extend the cable more than 10 meters

Solar pump

Solar pump can be required to energize water flow when solar thermal system is installed.

How to wire solar pump

Follow below procedures step 1 ~ step 4.

Step 1. Check if the power of the unit is turned off.

Step 2. Disassemble front panels and distinguish control box(Indoor) of the unit.

Step 3. Check if the harness(Black) is inserted fully to the indoor unit PCB (CN_PUMP_A4).

Step 4. Connect the external pump to terminal block 1(5/6).

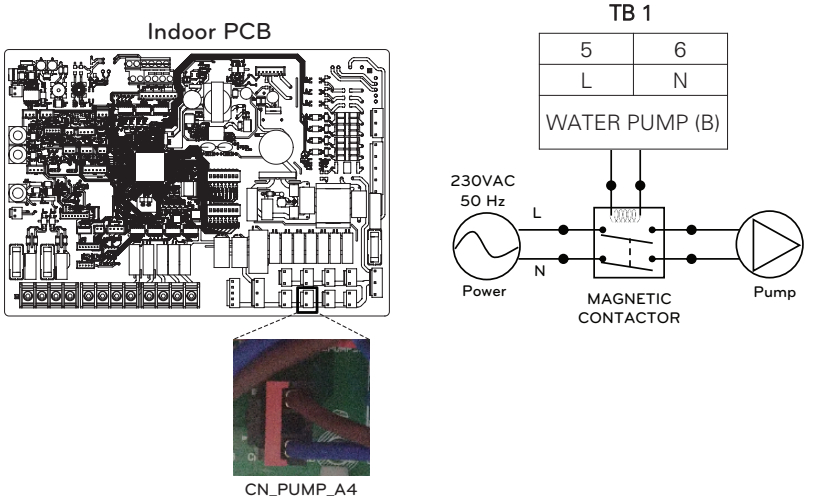

⚠ CAUTION

When connecting a pump of 1.05A or higher, its output must be used as a signal line only.

NOTE

PWM-type pump is not supported by this controller.

External pump

External pump (3rd-party) can be utilized if internal pump cannot overcome system pressure losses; if secondary pump is needed (in case parallel buffer tank) or - if two heating circuits are needed - as circuit pump to feed the radiator circuit.

How to wire external pump

Follow below procedures step 1 ~ step 3.

Step 1. Check if the power of the unit is turned off.

Step 2. Disassemble front panels and distinguish terminal block in Indoor PCB.

Step 3. Connect signal cable to terminal block fully.

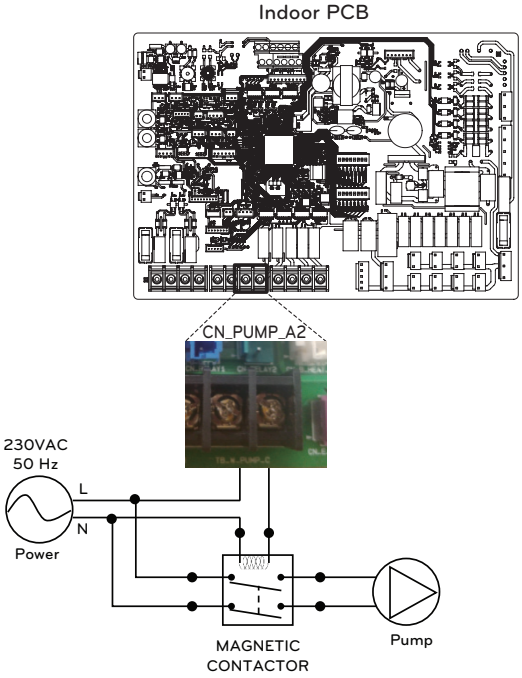

Main pump

How to wire main pump

Follow below procedures step 1 ~ step 3.

Step 1. Check if the power of the unit is turned off.

Step 2. Disassemble front panels and distinguish control box(outdoor) of the unit.

Step 3. Connect signal cable to terminal block fully.

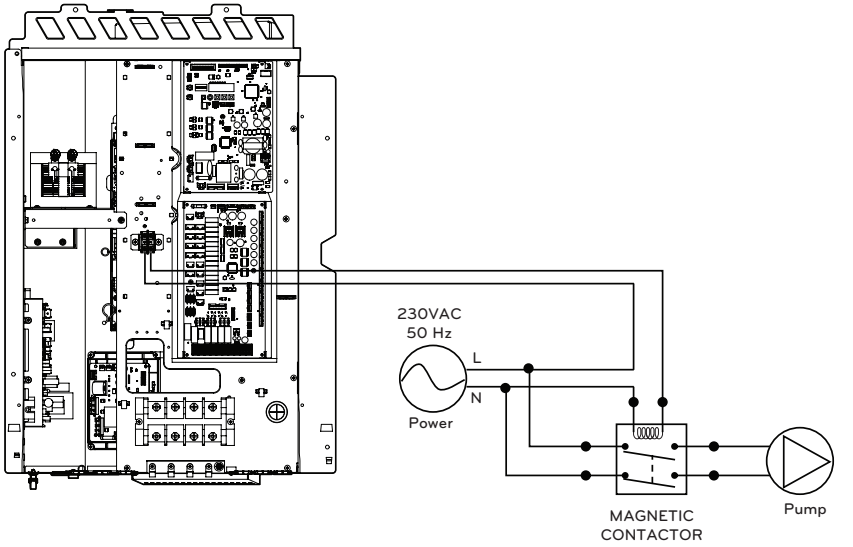

Wi-Fi Modem

Wi-fi modem enables remote system operation from smartphone. Available functions include selection of on/off, operation mode, DHW heating, temperature setup and weekly scheduling etc. For detailed instructions, refer to the manual included in the accessories.

How to wire Wi-Fi Modem

[Parts of Wi-Fi modem]

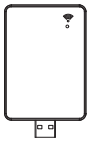

Wi-Fi modem body

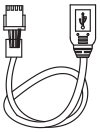

USB Cable

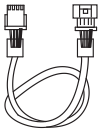

Extension Cable

※ Extension cable for Wi-Fi Modem : PWYREW000 (Sold Separately)

Follow below procedures step 1 ~ step 5.

Step 1. Check if the power of the unit is turned off.

Step 2. Disassemble front panels and distinguish control box(Indoor) of the unit.

Step 3. Connect the USB cable to the indoor unit PCB (CN_WIFI ; Blue) until it clicks into place.

Step 4. Connect the Wi-Fi modem to the USB cable fully.

Step 5. Refer to the image below to install the Wi-Fi modem in the marked position.

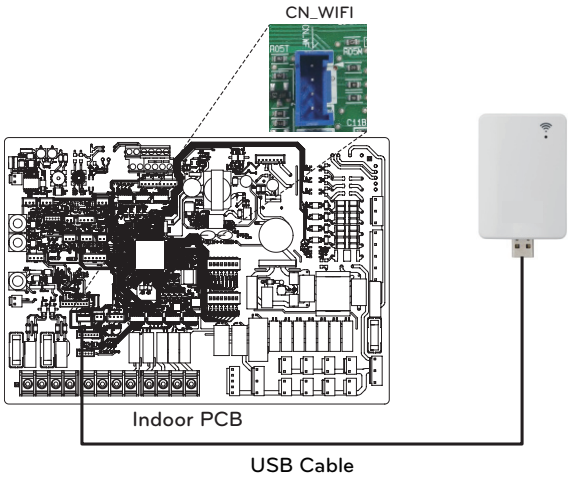

Energy State

This product provides energy states that enable customers to use as much as possible of their own renewable energy. It can shift setpoints depending on input signal from Energy Storage System (ESS) or from any other third-party device using Modbus RTU or Digital 230V inputs.

Available Energy States

There are 8 energy states available. 4 fixed and 4 customizable - each with the possibility to enhance self-consumption of renewable energy.

Energy state	Command	Battery State of charge	Operation (standard setting)					
			Heating		Cooling		Domestic Hot Water	
			Setting	Range	Setting	Range	Setting	Range
1	Operation Off (Utility lock)	Low	Forced internal operation off	Fixed	Forced internal operation off	Fixed	Forced internal operation off	Fixed
2	Normal Operation	Normal	Maintain operation status	Fixed	Maintain operation status	Fixed	Maintain operation status	Fixed
3	Operation On Recommend	High	Increase 2 °C from target temperature	Fixed	Maintain operation Status	Fixed	Increase 5 °C from target temperature	Fixed
4	Operation On Recommend	Very High	Maintain operation status	Fixed	Maintain operation status	Fixed	DHW Target 80 °C	Fixed
5	Operation On Commend	Very High	Increase from target temperature	0/+30 (Default : +5)	Decrease from target temperature	0/-30 (Default : -5)	Increase from target temperature	0/+50 (Default : +30)
6	Operation On Recommend	High	Increase from target temperature	0/+30 (Default : +2)	Decrease from target temperature	0/-30 (Default : -2)	Increase from target temperature	0/+50 (Default : +10)
7	Operation Save	Low	Decrease from target temperature	0/-30 (Default : -2)	Increase from target temperature	0/+30 (Default : +2)	Decrease from Target Temperature	0/-50 (Default : 0)
8	Operation Super Save	Very Low	Decrease from target temperature	0/-30 (Default : -5)	Increase from target temperature	0/+30 (Default : +5)	Decrease from Target Temperature	0/-50 (Default : 0)

Digital Input for energy saving (ESS, Smart Grid)

This product provides two digital inputs (TB_SG:ES1/ES2) that can be used to switch between energy states when not using Modbus RTU (CN-COM).

Available Energy States

There are 8 energy states available in total. Four different states can be triggered using the 230V-inputs – by default Energy states 1-4.

With the digital input assignment in the menu 'Energy state/Digital input assignment of the control panel, different Energy states can be selected for Signals 0:1 and 1:1.

0:0 is always linked with ES2 (Normal operation) and 1:0 is always linked with ES1 (Operation off/Utility lock).

How to set Digital input signal

Follow below procedures step 1 ~ step 3.

Step 1. Check if the power of the unit is turned off.

Step 2. Disassemble front panels and distinguish terminal block in Indoor PCB.

Step 3. Connect signal cable to terminal block in PCB (ES2, ES1) fully as shown below.

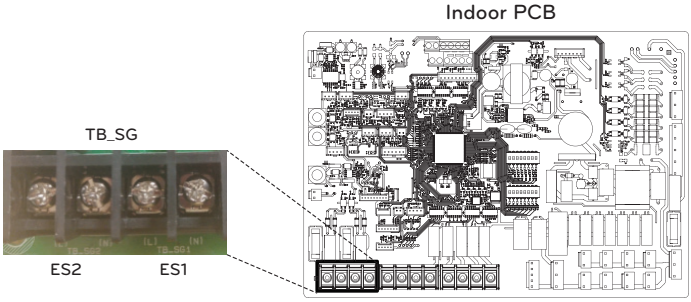

Energy state depending on input signal depends on the connection setting (LG ESS/SG Ready).

- When the connection setting is LG ESS

Input Signal		Output state	
ES1	ES2	Default	Range
0	0	Energy state 2	fixed
1	0	Energy state 1	
0	1	Energy state 3	Energy state 3 ~ Energy state 8
1	1	Energy state 4	

- When the connection setting is SG Ready

Input Signal		Output state	
ES1	ES2	Default	Range
0	0	Energy state 2	Fixed
1	0	Power Limitation	0~25.0 kW(Default: 4.2 kW)
0	1	Energy state 3	Energy state 3 ~ Energy state 8
1	1	Power Limitation	0~25.0 kW(Default: 4.2 kW)

NOTE

Power Limitation can be set in the Energy State within the installer setting.

2Way Valve

2way valve is required to control water flow while cooling operation. Role of 2way valve is to cut off water flow into under floor loop in cooling mode when fan coil unit is equipped for cooling operation.

General Information

THERMA V. supports following 2way valve.

Type	Power	Operating Mode	Supported
NO 2-wire [1]	230 V AC	Energize : Valve Closing	Yes
		De-Energize : Valve Opening	
NC 2-wire [2]	230 V AC	Energize : Valve Opening	Yes
		De-Energize : Valve Closing	

1) Normal Open type. When electric power is NOT supplied, the valve is open. (When electric power is supplied, the valve is closed.)

2) Normal Closed type. When electric power is NOT supplied, the valve is closed. (When electric power is supplied, the valve is open.)

How to Wire 2Way Valve

Follow below procedures Step 1 ~ Step 2.

Step 1. Uncover front cover of the unit.

Step 2. Find terminal block and connect wire as below.

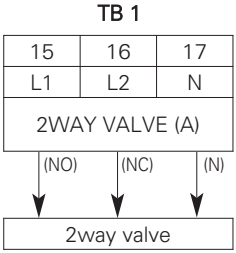

(NO) : Live signal (for Normal Open type) from PCB to 2way valve.

(NC) : Live signal (for Normal Closed type) from PCB to 2way valve.

(N) : Neutral signal from PCB to 2way valve.

⚠ CAUTION

Dew Condensation

- Wrong wiring can yield dew condensation on the floor. If radiator is connected at the under floor water loop, dew condensation can be occurred on the surface of the radiator.

⚠ WARNING

Wiring

- Normal Open type should be connected to wire (NO) and wire (N) for valve opening in cooling mode.
- Normal closed type should be connected to wire (NC) and wire (N) for valve closing in cooling mode.

Final Check

Flow direction :

- Water should not flow into under floor loop in cooling mode.
- To verify the flow direction, check temperature at the water inlet of the under floor loop.
- If correctly wired, this temperatures should not drop below 16 °C in cooling mode.

3Way Valve(A)

3Way Valve(A) is required to operate DHW water tank. Role of 3way valve is flow switching between space heating circuit and water tank heating loop.

General Information

THERMA V supports following 3way valve.

Type	Power	Operating Mode	Supported
SPDT [1] 3-wire	220-240 V~	Selecting Flow A[2] between Flow A and Flow B	Yes
		Selecting Flow B[3] between Flow A and Flow B	Yes

1) SPDT = Single Pole Double Throw. Three wires consist of Live1 (for selecting Flow A), Live 2 (for selecting Flow B), and Neutral (for common).
2) Flow A means 'water flow from the unit to space heating circuit.
3) Flow B means 'water flow from the unit to DHW water tank.'

How to wire 3way valve(A)

Follow below procedures Step 1 ~ Step 2.
Step 1. Uncover front cover of the unit.
Step 2. Find terminal block and connect wire as below.

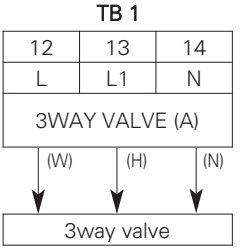

(W) : Live signal (Water tank heating) from PCB to 3way valve
(H) : Live signal (Space heating) from PCB to 3way valve
(N) : Neutral signal from PCB to 3way valve

⚠ WARNING

- 3way valve should select water tank loop when electric power is supplied to wire (W) and wire (N).
- 3way valve should select the heating circuit when electric power is supplied to wire (H) and wire (N).

NOTE

Operation time of flow control valve(e.g. 3way valve or 2way valve) should be less than 90 seconds.

Final check

No.	Check point	Description
1	Connection of Water Inlet/Outlet	- Check if the shut-off valves should be assembled with Water inlet and outlet pipe of the unit - Check the location of the water inlet/outlet water pipe
2	Hydraulic pressure	- Check the pressure of supplying water by using pressure gauge inside the unit (Monitoring screen). - Pressure of Supplying water should be Under 10 bar approximately
3	Water pump capacity	- To secure enough water flow rate, do not set water pump capacity as Minimum. - It can lead unexpected flow rate error CH14. (Refer to 'Water Piping and Water Circuit Connection')
4	Transmission line and power source wiring	- Check if Transmission line and power source wiring are separated from each other. - If it is not, electronic noise may occur from the power source.
5	The power cord specifications	- Check the power cord specifications (Refer to 'Communication cable')
6	3Way Valve	- Water should flow from Water outlet of the unit to sanitary tank Water inlet when sanitary tank heating is selected. - To verify the flow direction, Make sure that the water outlet temperature of the unit and water inlet temperature of sanitary Water tank are similar
7	2Way Valve	- Water should not flow into under floor loop in cooling mode. - To verify the flow direction, check temperature at the water inlet of the under floor loop. - If correctly wired, this temperatures should not drop below 16 °C in cooling mode.
8	Air Vent	- Air-vent must be located highest level of Water pipe system - It should be installed at the point which is easy to service. - It takes some times to remove air in the water system if air purge is not performed sufficiently it may occur CH14 error. (Refer to 'Water Charging')
9	Outdoor unit's zone & number setting	- Check proper wiring and polarity of communication wiring. - Check correct zone & number setting of outdoor units - Check that all DIP-switches are set correctly. DIP-switch No.5 in all outdoor units reset to "OFF" after installation.

⚠ WARNING

Do not use an automatic air-vent, as flammable refrigerant may leak into the water circuit and get released through an automatic valve into the building.

CONFIGURATION

As THERMA V. is designed to satisfy various installation environment, it is important to set up system correctly. If not configured correctly, improper operation or degrade of performance can be expected.

DIP Switch Setting

⚠ CAUTION

Turn off electric power supply before setting DIP switch

- Whenever adjusting DIP switch, turn off electric power supply to avoid electric shock.

General Information

Indoor PCB

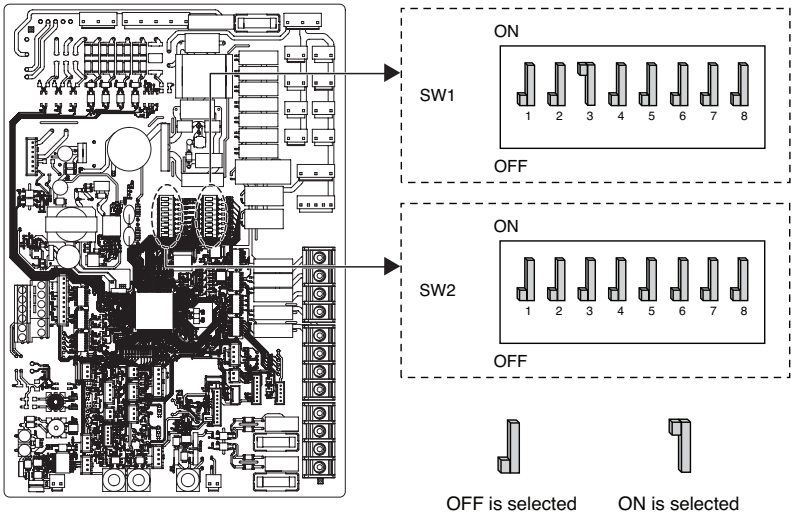

DIP Switch Information

Option Switch 1

Description	Setting		Default
MODBUS Communication Type	 1	As Master (LG extension modules)	 1
	 1	As Slave (3rd party controller)	
MODBUS Function	 2	Unified Open Protocol	 2
	 2	No function	
Communication Outdoor ↔ Indoor Unit	 3	RS-485(EIA-485) method, Flat (9600bps / TLV)	 3
	 3	AC method (150bps / 7bytes)	
Heating cycle limited operation* control	 7	Protective function is not used	 7
	 7	Protective function is used	
Antifreeze Agent	 8	Antifreeze agent is not used	 8
	 8	Antifreeze agent is used **	

* Heating Cycle Limited Operation can limit product limit operation for protecting compressor, INV-PCB. If heating cycle limited operation control is used and the product operates in the outside of declared product operation map, it'll become thermal off.
  - Product operation map : See Product Databook.

** Possibility to allow colder water temperature by setting.
Bridge at CN_ANTI_SW must be dis-connected to enable setting.

⚠ WARNING

NEVER change setting if antifreeze agent (glycol) is not actually added.

Option Switch 2

Description	Setting		Default
Accessory installation information	 2 3	Heat pump is installed (Heating (Cooling) circuit only)	 2  3
	 2 3	Heat pump + DHW tank is installed	
	 2 3	Heat pump + DHW tank + Solar thermal system is installed	
Cycle	 4	Heating Only	 4
	 4	Heating & Cooling	
Selecting Backup heater capacity	 6 7	Electric heater is not used	 6  7
	 6 7	Half capacity is used	
	 6 7	Reserved	
	 6 7	Full capacity is used	
Thermostat installation information	 8	Thermostat is NOT installed	 8
	 8	Thermostat is installed	

Setting the optional function

Select the mode/function/option/value using '▶', '◀' Button and confirm that using the '●' button after DIP switch No.5 is turned on.

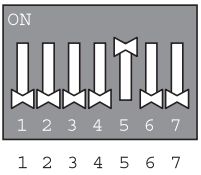

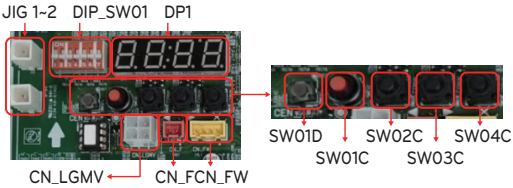

Mode		Function		Option			Value		Action		Remarks
Content	Display1	Content	Display2	Content		Display3	Content	Display4	Implement	Display5	
Installation	Func	High Static Pressure Compensation	Fn2	oFF	oP1~oP3	Selected the option	-	-	Change the set value	blank	Save in EEPROM
		Night low noise	Fn3	oFF	oP1~oP12	Selected the option	-	-	Change the set value	blank	Save in EEPROM
		ODU address	Fn5	-		-	0~255	Set the value	Change the set value	blank	Save in EEPROM
		Snow removal & rapid defrost	Fn6	oFF	oP1~oP3	Selected the option	-	-	Change the set value	blank	Save in EEPROM
		Emergency Independent Operation Mode	Fn7	oFF	oFF oP1~oP4	Selected the option	-	-	Change the set value	blank	Save in EEPROM
		Zone & Number Setting Mode	Fn8	-		Selected the option	01~68	Set the value	Change the set value	blank	Save in EEPROM
		ODU fan limitation	Fn13	oFF	oP1~oP7	Selected the option	-	-	Change the set value	blank	Save in EEPROM
		Compressor Input Current Limit	Fn20	oFF	oFF, oP1~oP5	Selected the option	-	-	Change the set value	blank	Save in EEPROM
		Optional Base panel Heater	Fn23	oFF	oFF, oP1~oP10	Selected the option	-	-	Change the set value	blank	Save in EEPROM
		Rapid defrosting time setting	Fn34	oFF	oP1~oP3	Selected the option			Change the set value	blank	Save in EEPROM
		Total Defrosting ending setting	Fn35	oFF	on, oFF	Selected the option			Change the set value	blank	Save in EEPROM
SVC	Fdd	Vaccum Mode	SE3	-		-	-	-	Start operation	vAcc	-
		Forced defrost	Fn6	-		-	-	-	Start operation	oN oFF	Save in EEPROM
		Cycle data view	SE8	oP1~oP26		-	-	-	Show in segmentchange the set value	Show the each numerical value in process	-
		Comp Align	SE13	on, oFF		-	-	-	Change the set value	blank	-
		Part Reliabilty	SE21					-			-
		Crank Case Heater	SE25	on, oFF				-	Change the set value	blank	-

* Functions save in EEPROM will be kept continuously, though the system power was reset.

High Static Pressure Compensation mode

This function secures the air flow rate of ODU, in case static pressure has been applied like using duct at fan discharge of ODU.

Mode setting method

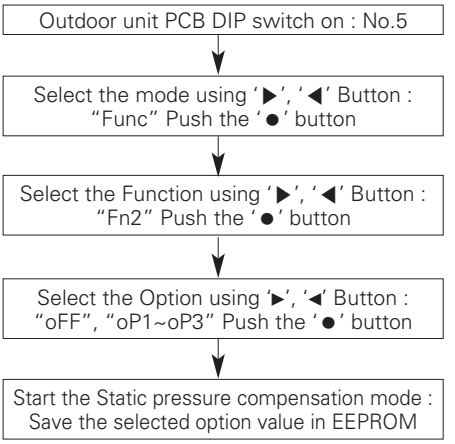

Static pressure setting

Option	Static Pressure
oFF	0~20 Pa
oP1	21~40 Pa
oP2	41~60 Pa
oP3	61~110 Pa

Emergency Independent Operation Mode

Emergency independent operation is that outdoor unit operates itself without the control of the cascade control unit.

Mode setting method

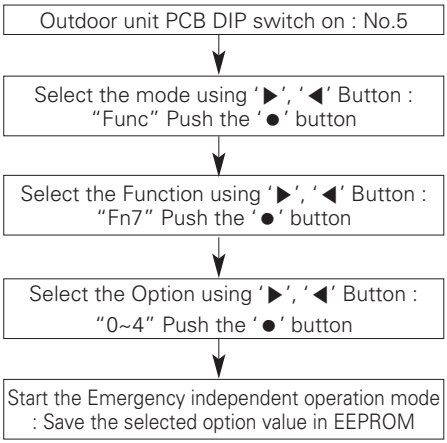

Desired outlet water temperature sestting

Option	Operation Mode	Desired outlet water temperature
0	-	Not Setting
1	Heating	30 °C
2		40 °C
3		50 °C
4		60 °C

Night Low Noise Function

In cooling mode, this function makes the ODU fan operate at low RPM to reduce the fan noise of ODU at night which has low cooling load.

Mode setting method

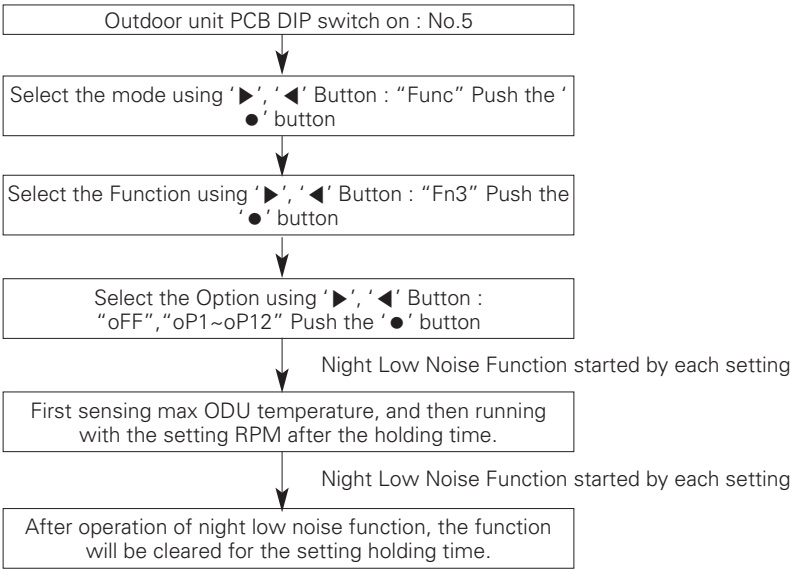

RPM / Time Settings

Step	Judgment Time(Hr)	Operation Time(Hr)
oP1	8	9
oP2	6.5	10.5
oP3	5	12
oP4	8	9
oP5	6.5	10.5
oP6	5	12
oP7	8	9
oP8	6.5	10
oP9	5	12
oP10	Continuous operation	
oP11		
oP12		

Noise

Option	Noise(dBA) Reduction
oP1~oP3, oP10	-3
oP4~oP6, oP11	-6
oP7~oP9, oP12	-9

⚠ CAUTION

- Request installer to set the function during installation.
- If ODU RPM changes, cooling capacity may go down.
- In case the function is not used, set the DIP S/W OFF and reset the power.

Snow removal & rapid defrost

Mode setting method

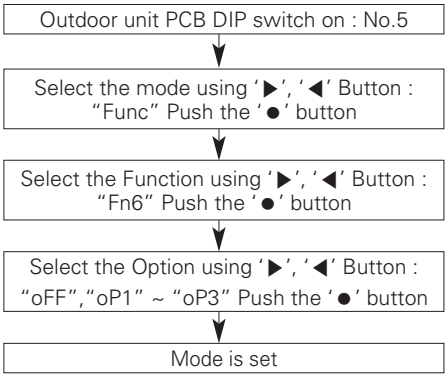

Mode setting

setting	Mode
oFF	Not setting
oP1	Snow removal mode
oP2	Rapid defrost mode
oP3	Snow removal mode. + Rapid defrost mode.

⚠ CAUTION

- Ask an authorized technician to setting a function.
- If do not use a function, set an off-mode.

Compressor Input Current Limit

System Input Current Control

Mode setting method

Outdoor unit PCB DIP switch on : No.5

↓

Select the mode using '▶', '◀' Button : "Func" Push the '●' button

↓

Select the Function using '▶', '◀' Button : "Fn20" Push the '●' button

↓

Select the Option using '▶', '◀' Button : "oFF","oP1"~"oP10" Push the '●' button

↓

Compressor Input Current Limit mode is set

Compressor Input Current Limit

Mode	Compressor Input Current Limit
oP1	95%
oP2	90%
oP3	85%
oP4	80%
oP5	75%
oP6	70%
oP7	65%
oP8	60%
oP9	55%
oP10	50%

⚠ CAUTION

- Ask an authorized technician to setting a function.
- If do not use a function, set an off-mode.
- If use a function, capacity may go down.

Overall Defrost Operating in Low temperature (Heating)

Mode setting method

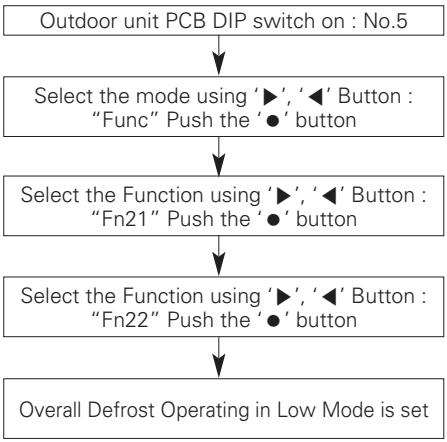

Setting	Detail of function
Default	OFF
Setting	ON/OFF Control

Base pan Heater operation

Mode setting method

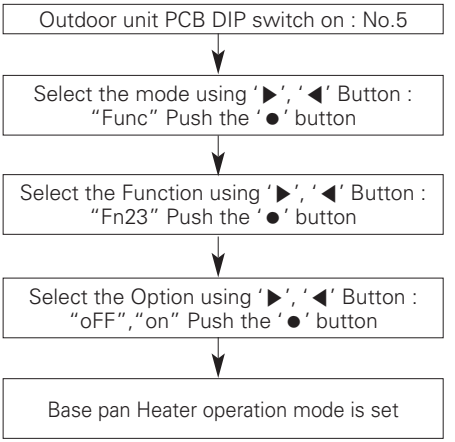

⚠ CAUTION

- Function to prevent freezing of ODU base pan in a cold area.
- Heater is accessory. (Sold separately)

SERVICE SETTING

How to enter service setting

To enter the menu displayed at the bottom, you need to enter the service setting menu as follows.

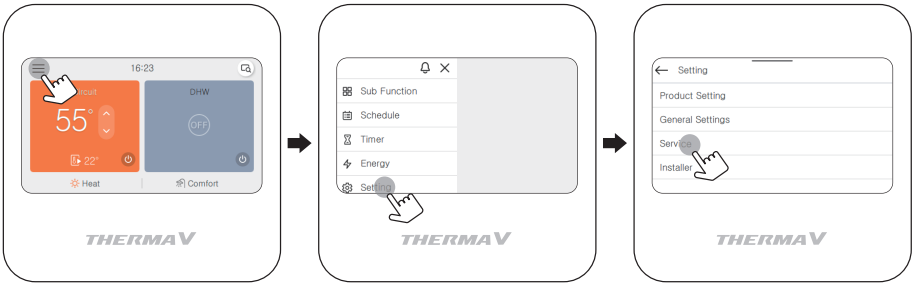

Service setting

- You can set the product service functions.
- Some functions may not be displayed/operated in some product types.

Menu	Description
Service contact	Check and input the service center phone number that you can call when there is service issue.
Model information	View product and capacity information
SW Version	Check the remote controller software version.
Open Source License	View the remote controller's open source license.
Software Update	Update the remote controller software version.

Service contact

Check and input the service center phone number that the user can call when there is service issue.

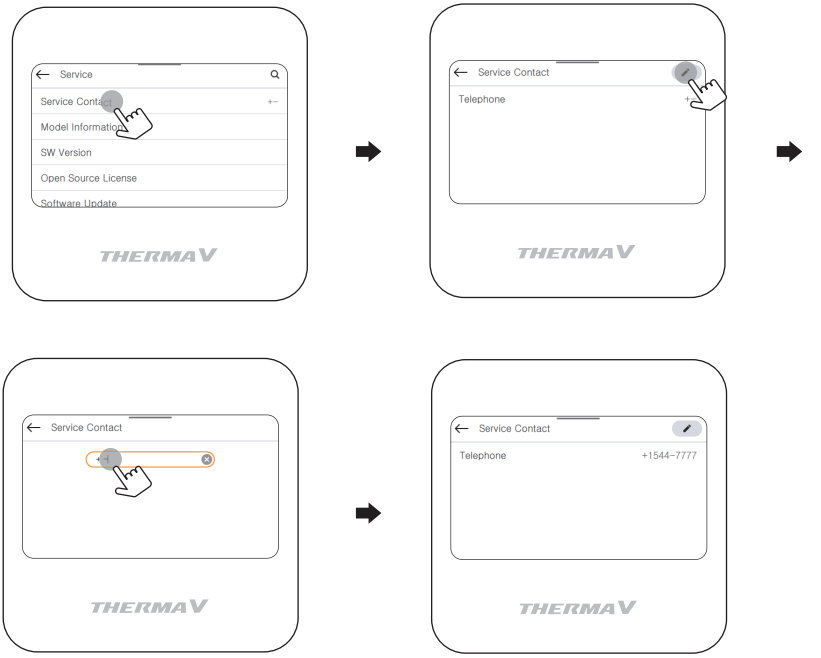

INSTALLER SETTING

How to enter installer setting

⚠ CAUTION

The installer setting mode is the mode to set the remote controller's detail function.
If the installer setting mode is incorrectly set, it may cause product failure, user's injury, or property damage. It must be set by the installation specialist with the installation license, and if it is installed or changed without installation license, all problems caused will be the responsibility of the installer, and may void the LG warranty.

- In the menu screen, press [<,>(left/right)] button to select the setting category, and press [∧(up)] button for 3 seconds to enter the password input screen for the installer setting.
- Input the password and press [OK] button to move to the installer setting list.

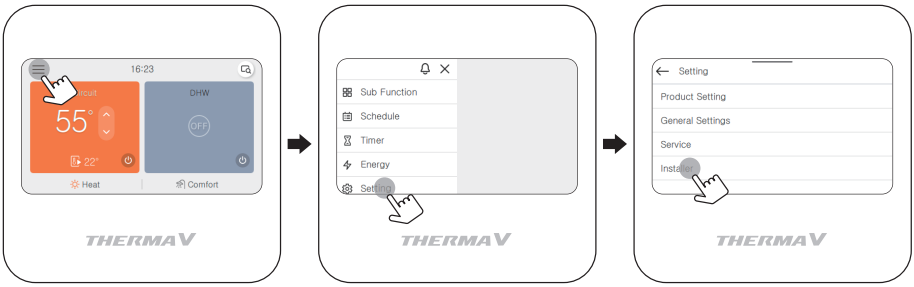

※ Installer setting password
Main screen ⟶ menu ⟶ setting ⟶ service ⟶ SW Version

Example) SW version : 1.00.1 a
In the above case, the password is 1001.

NOTE

Some categories of the installer setting menu may not be available depending on the product function or the menu name may be different.

Installer setting

- You can set the product user functions.
- Some functions may not be displayed/operated in some product types.

Menu hierarchy & Setting				Explanation	Detailed explanantion	Available Setting options (range)	Unit	Default
CONFIGURATION	Select Room Devices	RMC Linked To		Definition to which circuit this Remote controller is linked to. - **Circuit 1&2** : This RMC is used to control the whole heating system - **Circuit 1** : This RMC is used to control Circuit 1 (unmixed circuit) only - **Circuit 2** : This RMC is used to control Circuit 2 (mixed circuit) only	O	Circuit1 &2 / Circuit1 / Circuit2	-	Circuit 1&2
			Circuit 1	With this setting, a Digital input (Dry contact, 3rd party thermostat or external input) can be linked to Circuit 1. Consequently, the signal will be used as thermo-on/off command for Circuit 1 only.		CN-CC / CN-THMO / CN-EXT	-	CN-CC
			Circuit 2	With this setting a Digital input (Dry contact, 3rd party thermostat or external input) can be linked to Circuit 2. Consequently, the signal will be used as thermo-on/off command for Circuit 2 only.		CN-CC / CN-THMO / CN-EXT	-	CN-CC
	Mixing Circuit	Mixing Circuit		Additional mixing circuit is enabled using sensor CN- MIX-OUT and 3rd-party mixer. In case of 'Heating only', the Mixing valve is closed and the Mix pump is off during Cooling operation.		Not Use / Heat & Cool / Heat Only	-	Not use
			Valve Closing Time	Set operating time of 3rd-party mixer motor (Full open ⟶ Full close)		0 ~ 999	sec	240
	Backup Heater for DHW			Defines if Backup heater is used for re-heating the DHW in case of Emergency. To use this function the backup heater must be installed and configured by DIP switch! If the DHW boost heater inside of the tank is configured too, both heaters will run in parallel! In case of "Combination indoor unit" with integrated tank, always the Backup heater is supporting both - space heating and DHW heating!		Use / Not use	-	Not use

Menu hierarchy & Setting				Explanation	Detailed explanantion	Available Setting options (range)	Unit	Default
CONFIGURATION	External Pump			Setting if External pump is used and for what purpose. - **Use** : The external pump operates synchronously with the built-in pump inside the product. - **Heat & Cool** : The external pump operates synchronously with the built-in pump inside the product - except for DHW heating. - **Circuit 1** : The external pump is installed within Radiator circuit (Circuit 1) in case of two circuits.	O	Not use / Use / Heat&Cool / Circuit1	-	Not use
	Boiler Output			Setting whether 3rd-party boiler is connected to TB_EXT/EXT_BOILER and enabled below Bivalent point. - **Remark** : The boiler won't be controlled actively. Only it is released and must operate according its own controls. - **Heat & DHW** : The boiler is used for Space heating and DHW. - **Heating only** : The boiler is used for Space heating only. The heat pump is heating the DHW year-round.	O	Not use / Heat & DHW / Heating only	-	Not use
	DHW Boost Heater			If an electric boost heater is installed in the DHW tank, choose 'Installed'.		Installed / Not installed	-	Installed
	Select Outdoor Air Sensor			Definition which sensor is used to read the outdoor air temperature needed for Auto mode.	O	ODU air sensor / Wall- mounted air sensor	-	ODU air sensor
	Boiler Pump Operation	Main Pump		Setting defines if the Main pump remains operative,while the boiler is enabled.		Not use / Use	-	Not Use
		External Pump		Setting defines if the External pump remains operative, while the boiler is enabled.		Not use / Use	-	Use
GENERAL	Forced Pump Operation		Forced Pump Operation	If this function is activated, the internal pump will run at set interval to prevent stucking of pump when unit is out of operation for long time. Based on setting 'Configuration/External pump', the External pump will be activated, too.		Use / Not use	-	Use
			Oper. Cycle	If the integrated water pump has not operated for this time period, it will be activated by force.		20 ~ 180	h	20
			Run Time	After activation, the pump will operate for this time period.		1 ~ 10	min	10

Menu hierarchy & Setting				Explanation	Detailed explanantion	Available Setting options (range)	Unit	Default
GENERAL	Boiler 3Way Valve			Setting 3 way valve direction when operating the boiler.		DHW / Heating	-	DHW
	Pump Prerun/Overrun		Pump Prerun	Time how long pump will operate, before compressor starts.		1 ~ 10	h	1
			Pump Overrun	Time how long pump will operate, after compressor stopped.		1 ~ 10	min	1
	Energy Monitoring	Energy Monitoring		- **Not use** : Energy data is not displayed - **Use** : Energy data is displayed. In general, the internal sensors are used to estimate the consumed electricity and generated thermal energy. If metering module is connected, the estimated values will be overwritten with measured values. **Remark** : If anti-freeze is used, the internal metering becomes too inaccurate and either metering module should be connected or the setting should be changed to 'Not use'!		Not use / Use	-	Use
		Backup Heater Capacity	Control Standard	Definition what type of electric backup heater is used. **Remark** : When used in cascade control unit, 'External' can only be selected.		LG 1Ø / LG 3Ø / External	-	External
			Backup Heater Capacity	Input the rated capacity of the external backup heater. It is used for energy monitoring only.		1.0 ~ 10.0	kW	6
	Anti-Freezing Option			Setting defines the anti-freezing protection while the Remote controller is turned off. - **Type 1** : Outside air temp. and Water inlet temp. is supervised. - **Type 2** : Only outside air temp. is supervised.	O	Type1 / Type2	-	Type 1
	Backup Heater Release Temp.			**Bivalent point**: Below this outdoor air temperature, the backup heater is enabled. **Remark** : Even if outdoor temp. is colder, the heater will only turn on if necessary!	O	-25 ~ 18	°C	-5

Menu hierarchy & Setting			Explanation	Detailed explanantion	Available Setting options (range)	Unit	Default
GENERAL	Screed Drying	Screed Drying	Activation/Deactivation of screed-drying program. If activated, the leaving water target temp. will follow strict pattern acc. EN1264. Default time of complete program is 30 days!	O	On /Off	-	Off
		Step	If program was interrupted, it can be re-started from any step.		1 ~ 11	-	1
		Max. Temp.	Max. target temp. while Screed drying is active. Match with specification of underfloor heating system.		35 ~ 55	°C	55
		Step 8 Holding	Defines how long the max. temperature shall be kept.		1 ~ 30	days	7
	Heating Priority		Determination if room heating or sanitary hot waterhas higher priority to be heated.		Domestic Hot Water / Space heating	-	Domestic Hot Water
	Alternating defrost		If this function is activated, the outdoor units do not defrost at the same time.	O	Active / Inactive	-	Inactive
	Th delay time		The time when the number of operating outdoor units increases or decreases.		5 / 8 / 10 / 12 / 15	min	10

Menu hierarchy & Setting				Explanation	Detailed explanantion	Available Setting options (range)	Unit	Default
CIRCUIT1	Basic Settings	Main Pump Operation (Heat)	Time Format	- **Time** : Main circulation pump is turned on and off according to set On/Off times. - **Continuous operation** : Main circulation pump is running continuously during heating (cooling) period. Only in summertime it is turned off.		Time / Continuous Operation	-	Time
			On	Setting defines duration of Main pump operation to sense reference temp. from Circuit 1. Value should be adjusted based on length of pipework.		1 ~ 60	min	3
			Off	Setting defines interval between Main pump operations, while Thermo-off. Value should be adjusted based on building insulation standard.		1 ~ 60	min	3
		Main Pump Operation (Cool)	Time Format	- **Time** : Main circulation pump is turned on and off according to set On/Off times. - **Continuous operation** : Main circulation pump is running continuously during heating (cooling) period. Only in summertime it is turned off.		Time / Continuous Operation	-	Continuous Operation
			On	Setting defines duration of Main pump operation to sense reference temp. from Circuit 1. Value should be adjusted based on length of pipework.		1 ~ 60	min	3
			Off	Setting defines interval between Main pump operations, while thermo-off. Value should be adjusted based on building insulation standard.		1 ~ 60	min	3

Menu hierarchy & Setting				Explanation	Detailed explanantion	Available Setting options (range)	Unit	Default
CIRCUIT1	Basic Settings	Hysteresis Water Temp. (Heat)	Temp On	Settings define the hysteresis applied to water temp. control of Circuit 1		-9.0 ~ 0.0	K	-2.0
			Temp Off			0.0 ~ 4.0	K	2.0
		Hysteresis Water Temp. (Cool)	Temp On	Settings define the hysteresis applied to water temp. control of Circuit 1		0.0 ~ 3.0	K	0.5
			Temp Off			-3.0 ~ 0.0	K	-0.5
	Room Heating	Water Heating Set Temp.	Min.	The User's setting range of water target temperature in HEAT mode can be limited	O	15 ~ 34	°C	15
			Max.			35 ~ 65	°C	65
	Room Cooling	Water Cooling Set Temp.	Min.	The User's setting range of water target temperature in COOL mode can be limited	O	5 ~ 20	°C	10
			Max.			22 ~ 27	°C	24
CIRCUIT 2	Basic Settings	Cut Off Temperature(Heat)		Maximum temperature according underfloor heating system's manufacturer. If Mix temp. sensor reach this temperature, the Mix pump will stop and the Mixing valve will close. The water will circulate inside the Mix circuit until temperature has dropped.		20 ~ 65	°C	40
		Cut Off Temperature(Cool)		Minimum temperature according underfloor heating system's manufacturer. If temperature is reached, the Mix pump will stop and the Mixing valve will close. The water will circulate inside the Mix circuit until temperature has risen again. **Remark** : Prevention of condensate must be realized by additional measures like humidity monitor.		5 ~ 24	°C	18

Menu hierarchy & Setting				Explanation	Detailed explanantion	Available Setting options (range)	Unit	Default
CIRCUIT 2	Basic Settings	Mixing Pump Operation (Heat)	Time Format	- **Time** : Circulation pump installed in the mixing circuit is turned on and offaccording to set On/Off times. - **Continuous operation** : Circulation pump installed inthe mixing circuit is runningcontinuously during heating(cooling) period. Only insummertime it is turned off.		Time / Continuous Operation	-	Time
			On	Setting defines duration of Mixing pump operationto sense reference temp. from Circuit 2. Value should be adjusted based on length ofpipework.		1 ~ 60	min	3
			Off	Setting defines interval between Mixing pumpoperations, while Thermo-off. Value should be adjusted based on buildinginsulation standard.		1 ~ 60	min	3
		Mixing Pump Operation (Cool)	Time Format	- **Time** : Circulation pump installed in themixing circuit is turned on and offaccording to set On/Off times. - **Continuous operation** : Circulation pump installed inthe mixing circuit is runningcontinuously during heating(cooling) period. Only insummertime it is turned off.		Time / Continuous Operation	-	Continuous Operation
			On	Setting defines duration of Mixing pump operationto sense reference temp. from Circuit 2. Value should be adjusted based on length ofpipework.		1 ~ 60	min	3
			Off	Setting defines interval between Mixing pumpoperations, while Thermo-off. Value should be adjusted based on buildinginsulation standard.		1 ~ 60	min	3

Menu hierarchy & Setting				Explanation	Detailed explanantion	Available Setting options (range)	Unit	Default
CIRCUIT 2	Basic Settings	Hysteresis Water Temp. (Heat)	Temp On	Settings define the hysteresis applied to water temp. control of Circuit 2		-9.0 ~ 0.0	K	-2.0
			Temp Off			0.0 ~ 4.0	K	2.0
		Hysteresis Water Temp. (Cool)	Temp On	Settings define the hysteresis applied to water temp. control of Circuit 2		0.0 ~ 3.0	K	0.5
			Temp Off			-3.0 ~ 0.0	K	-0.5
		Comp. Operation		- **Type 1** : When the compressor operates, it operates by referencing the target temperature of both Circuit 1 and Circuit 2. When only Circuit 2 is thermo-on condition, the compressor still operates. Under certain conditions, it can happen that the temperature of Circuit 1 overshoots its target temperature. - **Type 2** : When the compressor operates, it operates by referencing the target temperature of Circuit 1. When only Circuit 2 is thermo-on condition, the compressor is stopped.		Type 1 / Type 2	-	Type 2
	Room Heating	Water Heating Set Temp.	Min.	The User's setting range of water target temperature in HEAT mode can be limited. At the same time, this is the limitation of temperature for all modes incl. AUTO mode! Set according to Underfloor heating manufacturer's documentation.	O	15 ~ 34	°C	15
			Max.			35 ~ 65	°C	65
	Room Cooling	Water Cooling Set Temp.	Min.	The User's setting range of water target temperature in COOL mode can be limited. At the same time, this is the limitation of temperature for all modes incl. AUTO mode! Set according to Underfloor heating manufacturer's documentation.	O	5 ~ 20	°C	10
			Max.			22 ~ 27	°C	24

Menu hierarchy & Setting					Explanation	Detailed explanantion	Available Setting options (range)	Unit	Default
AUTO MODE	Seasonal Auto Temp	Mode			Definition if weather-dependency (Auto mode) is applied to heating and cooling or heating only.	O	Heat & Cool / Heat Only / Cool	-	Heat Only
		Reference Temp.	O1		Graphic setting of outdoor temperature ranges for heating and cooling in Auto mode.		-25 ~ 35	°C	-10
			O2				-25 ~ 35	°C	18
			O3				10 ~ 46	°C	30
			O4				10 ~ 46	°C	40
		Set Temperature	Circuit 1	W1	Graphic setting of target temperatures in Heating/Cooling operation for Circuit 1 & 2.		15 ~ 65	°C	50
				W2			15 ~ 65	°C	40
				W3			5 ~ 27	°C	12
				W4			5 ~ 27	°C	10
			Circuit 2	W1			15 ~ 65	°C	35
				W2			15 ~ 65	°C	28
				W3			5 ~ 27	°C	18
				W4			5 ~ 27	°C	16
DOMESTIC HOT WATER	DHW Temperature Settings		DHW Set Temp Range	Min.	Limitation of setting range (DHW temp. target that User can set) The setting range is limited, if no boost heater is installed.	O	30 ~ 40	°C	40
				Max.			50 ~ 80	°C	65
			Compressor Cycle Limit Temp		This is the max. DHW temp. that that can be reached by using compressor cycle only (without using electrical boost heater). It also depends on effectiveness of heat transfer from heat pump to DHW tank (size of coil, sensor positioning). Reducing the setting may lead to increased consumption of electricity.		40 ~ 55	°C	55
			DHW hysteresis		Temperature gap between DHW target temp. (by User) and DHW temperature when re-heating starts. **Example** : Target temp. = 48 °C DHW hysteresis = 5 K ⟶ DHW heating starts at 43°C		1 ~ 30	K	5

Menu hierarchy & Setting				Explanation	Detailed explanantion	Available Setting options (range)	Unit	Default
DOMESTIC HOT WATER	Thermal disinfection 1	Disinfection active		Activation/Deactivation of anti-legionella operation. Electric heater must be connected and activated to perform this function.	O	Not use / Use	-	Not use
		Start Date		Weekday and time at which the anti-legionella function is executed.		Sun. / Mon. / Tue. / Wed. / Thu. / Fri. / Sat.	-	Fri
		Start time				0 ~ 23	hh:-	23:00
	Thermal disinfection 2	Max. Temp		Target temp. for thermal disinfection cycle.		60 ~ 80	°C	70
		Duration		Duration how long disinfection target temp. is kept. After time has elapsed, target is reduced to normal setpoint.		5 ~ 60	min	10
		Forced end time		After this time has elapsed, thermal disinfection will stop - even is disinfection temp. is not reached.		1 ~ 12	hrs	1
	DHW Heating Duration		Active Time	Duration how long DHW heating continues	O	5 ~ 95	min	30
			Stop Time	Duration how long DHW heating is interrupted (if DHW target is not reached in one cycle)		0 ~ 600	min	30
	DHW electric re-heating	DHW Electric Re-Heating		- **Use** : will be re-heated electrically if the heat pump cycle does not reach the target temp. within time setting. - **Use Disinfect** : Electric re-heating is only used for anti-legionella operation and in case of emergency. If 'Use Disinfect' is chosen, the DHW temp. setting range is limited!	O	Use always / Use Disinfect	-	Use always
		Delay Time		After time has elapsed, the DHW boost heater is released.		10 / 20 / 30 / 40 / 50 / 60 / 90 / 120 / 1440	min	30

Menu hierarchy & Setting			Explanation	Detailed explanantion	Available Setting options (range)	Unit	Default
DOMESTIC HOT WATER	DHW Re-Circulation	DHW Re-Circulation	Definition if DHW recirculation pump is connected or not. If it is used, a Schedule in the main menu becomes available to set the time frames for operating the pump.	O	Use / Not use	-	Not use
		On	Definition of recirculation pump cycling pattern during release schedule. By default, the pump operates every twenty minutes for 10 minutes (only during the set Schedule!)		5 ~ 60	min	10
		Off			5 ~ 60	min	20
SOLAR THERMAL SYSTEM	Solar collector operating range	Min.	Solar cycle will not start before collector hasreached this temp.	O	5 ~ 50	°C	10
		Max.	Solar cycle will not start if collector exceeds this temp.		60 ~ 200	°C	135
	Solar Tank Temp. Limit		Solar cycle will not start, if DHW tank has reachedits maximum temp.		20 ~ 90	°C	80
	Solarthermal △T	Temp On	Delta temp. between Solar collector and DHW tank must be reached before solar pump starts. **Example** : Actual DHW temp. = 45 °C, Temp On = 8 K ⟶ Solar cycle start, if collector exceeds 53 °C	O	3 ~ 40	K	8
		Temp Off	Delta temp. between Solar collector and DHW tank must be undercut before solar cycle stops. **Example** : Actual DHW temp. = 45 °C, Temp Off = 2K ⟶ Solar cycle stops, if collector undercuts 47°C		1 ~ 7	K	2
	Renewable DHW heating		The electrical DHW boost heater can be disabled, while solar cycle is in operation.		Enable / Disable	-	Enable

Menu hierarchy & Setting				Explanation	Detailed explanantion	Available Setting options (range)	Unit	Default
SOLAR THERMAL SYSTEM	Solar circuit flushing	Solar pump flush schedule	Control	Frequent activation of solar pump can be activated/deactivated. This function is recommended only if there are random shadows (tree, chimney..) covering the collector sensor. If solar cycle is out of operation, solar pump will start after this time has elapsed, in order to check the available solar temp. Duration should be as long as necessary, but as short as possible. If collector is cold, heat will be wasted "to the roof"!		On / Off	-	On
			Start Hour	Within this time frame the Solar flushing function is enabled. Flushing is only reasonable during daytime.		0 ~ 23	hh:-	6:00
			Start Minute			0 ~ 59	-:mm	
			End Hour			0 ~ 23	hh:-	18:00
			End Minute			0 ~ 59	-:mm	
		Sola pump flush setting	Oper. Cycle	Duration until next flushing starts		30 ~ 120	-	60
			Oper. Time	Duration how long the solar pump operates to flush the circuit		1 ~ 10	-	1
	Solar pump test run			Start' will activate the solar pump for 1 hour. During this period, the pump will be turned on and off intermittently to purge air from the cycle.		Start / Stop	-	-

Menu hierarchy & Setting			Explanation	Detailed explanantion	Available Setting options (range)	Unit	Default
SERVICE	Pump Test Run		'Test run' will activate the Main pump for 1 hour. During this period, the pump will be turned on and off intermittently to purge air from the cycle. Based on setting 'Configuration/External pump', the External pump will be activated, too. The operation can be stopped by pushing the On/Off button on the Remote controller.	O	Test Run	-	-
	Frost Protection Temp.		By default, the frost protection is activated if any water temperature sensor measures a temperature below 4°C. The temperature might be reduced, if anti-freeze agent is added to the water circuit. However, this setting is only valid when the antifreeze short pin (CN_ANTI_SW) is removed and DIP switch SW1 - No.8 is turned on. Refer to detailed description in this manual.	O	4 / -1 / -6 / -11 / -16 / -21	K	-1
	Factory Data Reset		If this function is activated, the remote controller will be restored to its initial state and the data will be reset.		OK / Cancel	-	-
	Actuator Test	Test Mode	Before actuator outputs can be tested, the 'Test mode' must be turned on. While it is enabled, normal functions will be suppressed. Make sure that all electric wiring and piping work is executed correctly before starting the Test mode!. Only professional users should use this functionality! It is highly recommended to test only one output at a time. Other than the functions "Solar pump test run" and "Pump test run", the actuators are turned on continuously until the setting is changed to Off again.	O	On / Off	-	Off

Menu hierarchy & Setting				Explanation	Detailed explanantion	Available Setting options (range)	Unit	Default
SERVICE	Actuator Test	Pump Test	A1 Main pump	In this Service menu, the actuators like pumps and valves can be activated to check for correct operation during commissioning. **Remark** : A6(Mixing valve open) and A7(mixing valve close) cannot be turned on at the same time		On / Off	-	-
			A2 External pump			On / Off	-	-
			A3 Mix pump			On / Off	-	-
			A4 Solar pump			On / Off	-	-
			A15 DHW Re-circulation pump			On / Off	-	-
		Valve Test	A5 DHW 3-way-valve			Domestic Hot Water / Space	-	-
			A6 Mixing valve open			On / Off	-	-
			A7 Mixing valve close			On / Off	-	-
			A12 Cooling 2-way-valve			On / Off	-	-
	Monitoring	Sensor Value	S11 Entering water	In this Service menu, all sensor values are displayed to easily recognize if all values are reasonable.		-	°C	-
			S12 Leaving water			-	°C	-
			S13 Backup heater outlet			-	°C	-
			S14 DHW tank			-	°C	-
			S15 Solar collector			-	°C	-
			S16 Solar tank			-	°C	-
			S17 Water flow sensor			-	°C	-
			S18 Mixing circuit			-	°C	-
			S19 Water pressure			-	°C	-
			S21 Room temp. Direct circuit			-	°C	-
			S22 Room temp. Mixing circuit			-	°C	-
			S24 Wall-mounted air sensor			-	°C	-

Menu hierarchy & Setting				Explanation	Detailed explanation	Available Setting options (range)	Unit	Default
SERVICE	Monitoring	Input status	SG1	In this Service menu, the status of allphysical inputs are listed up **Remark** : If the input signal is normal, "1"is displayed, while there is nosignal, "0" is displayed.		0 / 1	-	-
			SG2			0 / 1	-	-
			CN-EXT			0 / 1	-	-
			Antifreeze shortkey			0 / 1	-	-
			Thermostat (Heating)			0 / 1	-	-
			Thermostat (Cooling)			0 / 1	-	-
			Thermostat (DHW)			0 / 1	-	-
		Output status	A1 Main pump	In this Service menu, the status of allphysical outputs are listed up **Remark** : Displays "1" if a signal is beingsent, and "0" if there is no signal.		0 / 1	-	-
			A2 External pump			0 / 1	-	-
			A3 Mix pump			0 / 1	-	-
			A4 Solar pump			0 / 1	-	-
			A5 DHW 3-way-valve			Domestic Hot Water / Space	-	-
			A6 Mixing valve (Open)			0 / 1	-	-
			A7 Mixing valve (Close)			0 / 1	-	-
			A12 Cooling 2-way-valve			0 / 1	-	-
			A15 DHW Re-circulation pump			0 / 1	-	-
			A8 Backup heater (Step 1)			0 / 1	-	-
			A9 backup heater (Step 2)			0 / 1	-	-
			A10 DHW Boost heater			0 / 1	-	-
			A11 External boiler			0 / 1	-	-

Menu hierarchy & Setting				Explanation	Detailed explanation	Available Setting options (range)	Unit	Default
SERVICE	Runtimes reset	Comp. Reset		In this menu, runtimes can be reset.		Reset	-	-
		Backup heater Reset				Reset	-	-
		Boost heater Reset				Reset	-	-
		Pump operation time				Reset	-	-
		Solar pump Reset				Reset	-	-
CONNECTIVITY	Dry Contact		Dry Contact Mode	- **Manual** : Unit must be turned-on by Remote controller after release by Dry contact - **Auto** : Unit will automatically start (return to previous operation) after release by Dry contact		Auto / Manual	-	Auto
			CN_CC	- **D/C Automatic** : Unit will recognize connected Dry contact after power-on - **D/C Not Installed** : Dry contact is not installed - **D/C Installed** : Dry contact is installed and unit always checks its state Additionally, check setting for 'Dry contact mode'!		D/C Automatic / D/C Not Installed / D/C Installed	-	D/C Automatic
	Central Control Address			Address setting if LG Central controller is connected		00 ~ FF	hexadec.	00
	Modbus Address			Address setting if heat pump is controlled via Modbus by 3rd-party controller **Remark** : To use this function, switch No.1 of DIP switch SW 1 must be turned ON.	O	01 ~ FF	hexadec.	01

Menu hierarchy & Setting			Explanation	Detailed explanation	Available Setting options (range)	Unit	Default
CONNECTIVITY	CN_EXT		- **Not use** : CN_EXT is not used - **Simple operation** : Open= Operation off Closed= Operation On - **Simple dry contact** : Open= Operation Off with dry contact lock Closed= lock released, operation on/off depends on setting 'Dry contact mode' - **Single emergency stop** : Open= Emergency stop with forced lock Closed= Forced lock released	O	Not use / Simple Operation / Simple dry contact / Single emergency stop	-	Not use
	3rd party boiler	Mode	Boiler can be activated either manually (by User setting) or automatically (below certain outdoor temp.) - **Manual**: The Boiler is (de-)activated manually (by User setting) If the boiler is activated, the heat pump is switched off. - **Biv-alternative**: Automatic switch-over between heat pump and boiler. Below Bivalent temperature, the heat pump is turned off. - **Biv-parallel**: Automatic release of boiler. Below Bivalent temp., the heat pump is still in operation. The boiler is activated additionally, if the heat pump alone cannot meet the target temp. within reasonable time.	O	Manual / Biv-alternative/ Biv-parallel	-	Manual
		Temp	Boiler will be activated, if outdoor temp. undercuts this value. Heat pump will stop.		-25 ~ 25	°C	-7
		Hysteresis	Boiler will be de-activated and heat pump reactivated, if outdoor temp. exceeds temp. setting plus hysteresis. **Example** : 'Temp.' = -7°C, 'Hysteresis' = 4K ⟶ Boiler is enabled at -7°C and disabled at -3°C outdoor temp.		2 ~ 10	K	4

Menu hierarchy & Setting				Explanation	Detailed explanation	Available Setting options (range)	Unit	Default
CONNECTIVITY	Boiler 3Way Valve			Setting 3 way valve direction when operating the boiler.		DHW / Heating	-	DHW
	Meter Interface	Modbus Address		- **Not use** : Meter interface is not connected - **B0** : Meter interface is connected (address 1) DIP SW_01M @ PENKTH000 = Off - **B1** : Meter interface is connected (address 2) DIP SW_01M @ PENKTH000 = On		Not use / B0 / B1	-	Not use
		Unit	Port 1	Spec of wattmeter at Port 1 (Power consumption heat pump)		0.1 ~ 9999.9	pulse/ kWh	0000.0
			Port 2	Spec of wattmeter at Port 2 (Power consumption backup heater)		0.1 ~ 9999.9	pulse/ kWh	0000.0
			Port 3	Spec of wattmeter at Port 3 (Power consumption DHW boost heater)		0.1 ~ 9999.9	pulse/ kWh	0000.0
			Port 4	Spec of heat meter at port 4 (Heat produced by heat pump + backup heater)		0.1 ~ 9999.9	pulse/ kWh	0000.0
	Energy State	Connection		Select the usage of the Energy State for Home Energy Management Systems.	O	LG ESS / SG Ready	-	SG Ready
		Signal type		Set the type of signal connection to be connected to external devices.	O	Not use / 230V inputs / Modbus	-	Not use

Menu hierarchy & Setting				Explanation	Detailed explanation	Available Setting options (range)	Unit	Default
CONNECTIVITY	Energy State	Energy State Definition	Energy State 5	Setting whether Energy state 5 is used or not.	O	Not use / Use	-	
			Energy State 5 - Heat Temp.	Definition how much Heating target temp. shall increase when Energy state 5 is applied.		0 ~ 30	K	5
			Energy State 5 - Cool Temp.	Definition how much Cooling target temp. shall decrease when Energy state 5 is applied.		-30 ~ 0	K	-5
			Energy State 5 - DHW Temp.	Definition how much DHW target temp. shall increase when Energy state 5 is applied.		0 ~ 50	K	30
			Energy State 6	Setting whether Energy state 6 is used or not.		Not use / Use	-	
			Energy State 6 - Heat Temp.	Definition how much Heating target temp. shall increase when Energy State 6 is applied.		0 ~ 30	K	2
			Energy State 6 - Cool Temp.	Definition how much Cooling target temp. shall decrease when Energy state 6 is applied.		-30 ~ 0	K	-2
			Energy State 6 - DHW Temp.	Definition how much DHW target temp. shall increase when Energy state 6 is applied.		0 ~ 50	K	10
			Energy State 7	Setting whether Energy state 7 is used or not.		Not use / Use	-	
			Energy State 7 - Heat Temp.	Definition how much Heating target temp. shall increase when Energy State 7 is applied.		-30 ~ 0	K	-2
			Energy State 7 - Cool Temp.	Definition how much Cooling target temp. shall decrease when Energy State 7 is applied.		0 ~ 30	K	2
			Energy State 7 - DHW Temp.	Definition how much DHW target temp. shall increase when Energy State 7 is applied.		-50 ~ 0	K	0

Menu hierarchy & Setting				Explanation	Detailed explanation	Available Setting options (range)	Unit	Default
CONNECTIVITY	Energy State	Energy State Definition	Energy State 8	Setting whether Energy state 8 is used or not.	O	Not use / Use	-	
			Energy State 8 - Heat Temp.	Definition how much Heating target temp. shall increase when Energy State 8 is applied.		-30 ~ 0	K	-5
			Energy State 8 - Cool Temp.	Definition how much Cooling target temp. shall decrease when Energy State 8 is applied.		0 ~ 30	K	5
			Energy State 8 - DHW Temp.	Definition how much DHW target temp. shall increase when Energy State 8 is applied.		-50 ~ 0	K	0
		Digital Input Assignment	State 3 (0:1)	**Definition of Energy state 3** : - **3**: Cooling/no effect, Heating/Target +2K, DHW/Target +5K - **4**: Cooling/no effect, Heating/no effect, DHW/Target=80°C - **5~8**: According setting "Energy state definition"	O	3 ~ 8	-	3
			State 4 (1:1)	**Definition of Energy state 4** : - **3**: Cooling/no effect, Heating/Target +2K, DHW/Target +5K - **4**: Cooling/no effect, Heating/no effect, DHW/Target = 80 °C - **5~8**: According setting "Energy state definition" * When SG Ready is connected via Digital input, state 4(1:1) is in the power limitation state and the setting is disabled.		3 ~ 8	-	4
		Power Limittation Setting		Active only when SG Ready establishes a connection via digital input. The power limitation setting can be set from 0.1 kW to 25.0 kW. * Set the power limit value to be distributed to each outdoor unit. **Example**: Total power limitation value = 60.0 kW ODU Install Count = 3 units → Power Limitation Setting = 60.0 kw / 3 = 25.0 kW	O	0.1 ~ 25.0	kW	4.2
	Thermostat Control Type			Setting what type of thermostat is connected		- heat & Cool - heat & Cool/DHW - DHW only	-	Heat & Cool

Menu hierarchy & Setting			Explanation	Detailed explanation	Available Setting options (range)	Unit	Default
CASCADE	Basic settings	Cascade control value	Setting temperature difference between inlet water temperature and target outlet water temperature. Cascade control unit refers to target outlet water temperature when operating the outdoor units.		3 / 5 / 7 / 10	℃	5
		ECO mode	If this function is activated, the efficiency will be improved and the electrical consumption will be reduced. Eco mode has a relatively slow temperature change compared to common mode.		Use / Not use	-	Not Use
		System Allowance	Allowable percentage of outdoor units with errors. If the percentage of outdoor units with errors exceeds the set value, all outdoor units will stop operating.		70 / 80 / 90 / 100	%	70
	Group Configuration	X0 (Cooling, Heating, Hot Water)	After zone and number setting of the outdoor units, checking the outdoor unit's number in the zone.		-	-	-
		X1 (Cooling only)					
		X2 (Heating only)					
		X3 (Hot Water only)					
		X4 (Cooling, Hot Water)					
		X5 (Heating, Hot Water)					
		X6 (Cooling, Heating)					

Menu hierarchy & Setting		Explanation	Detailed explanation	Available Setting options (range)	Unit	Default
OUTDOOR UNIT	ODU Install Count	Setting the number of the outdoor units installed.		1 / 2 / 3 / 4 / 5 / 6 / 7 / 8	-	
	ODU Address 1	After zone and number setting of the outdoor units, matching ODU address with the outdoor unit's number.		1 / 2 / 3 / 4 / 5 / 6 / 7 / 8	-	1
	ODU Address 2					2
	ODU Address 3					3
	ODU Address 4					4
	ODU Address 5					5
	ODU Address 6					6
	ODU Address 7					7
	ODU Address 8					8
INFORMATION	Pump Operation Time	In this menu, cascade control unit's pump operation time is displayed.		-	h	
	IDU Operation Time	In this menu, cascade control unit's operation time is displayed.		-	h	
	Current Flow Rate	In this menu, one outdoor unit's current flow rate is displayed.		-	L/min	
	Data Logging	In this menu, cascade control unit's data log is displayed.		-	-	

Installer settings in detail

This chapter provides extended explanations for some of the settings.

Configuration - Select room devices

In this menu, it is possible to flexibly define the devices used to control room air temperature.

If third-party thermostats are used, the thermostat-input and/or a Dry contact can be used for connection to the heat pump.

Example)
Configuration - Select room devices - RMC linked to: Circuit1&2
Configuration - Select room devices - Circuit 1 - Digital input - CN-THMO
Configuration - Select room devices - Circuit 2 - Digital input - CN-CC

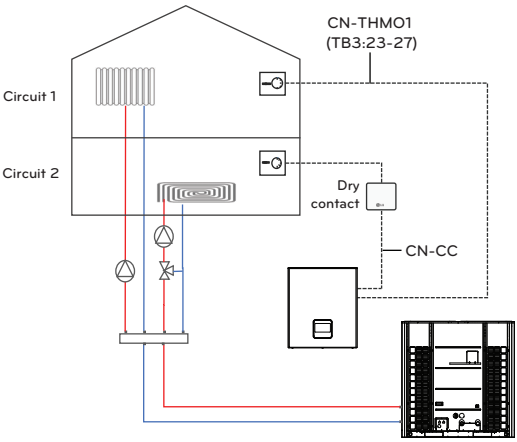

NOTE

In this setup, Mode-change is only possible through Thermostat-inputs at Indoor unit (and by using the Remote controller).
The thermostat connected via Dry contact shall be used only for give thermo-on/off signal.

Configuration - External Pump

This function can be set to control the external water pump. Three options are possible, related to the location of the pump.

Use

In case of long piping, the External pump is used to overcome high pressure losses or as secondary pump in combination with a parallel buffer tank. With this setting, the pump always operates in parallel to internal pump.

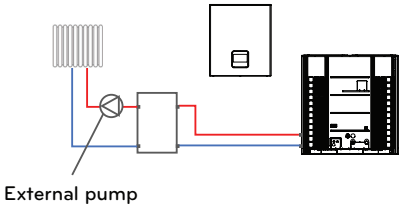

Heating/Cooling

In case of long piping, the External pump is used to overcome high pressure losses. The pump is installed downstream of DHW connection. With this setting, the pump operates in parallel to internal pump during space heating and cooling mode. While the DHW tank is charged, the External pump remains off.

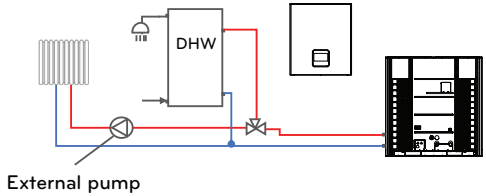

Circuit1

If Mixing circuit is configured, the External pump can be used to serve the direct circuit (Circuit1), while the Mix pump serves Circuit2. In this setting, the External pump operates according to thermo-on/off state of Circuit1.

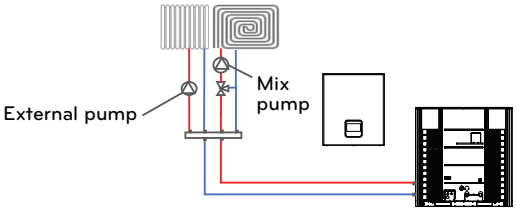

Configuration - Boiler output

This setting must be adjusted based on the system layout.

Layout 1

Boiler output = Heat & DHW

DHW by heat pump activated (⟶ DIP switch SW2/2&3)

Both, heat pump and boiler can be used for space heating and DHW heating. If the Bivalent temperature is reached, the boiler takes over completely and the heat pump is turned off.

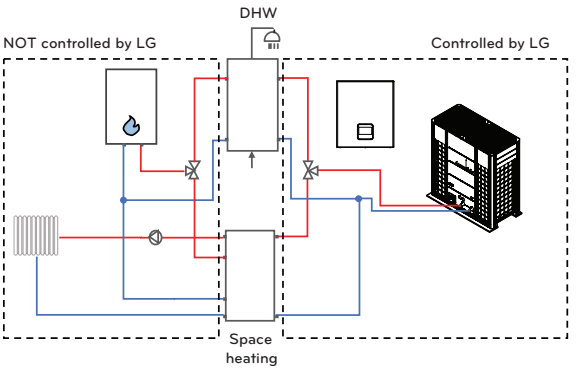

Layout 2

Boiler output = Heating only

DHW by heat pump activated (⟶ DIP switch SW2/2&3)

The boiler is connected to the space heating circuit only. The heat pump is used for DHW heating even below Bivalent temperature.

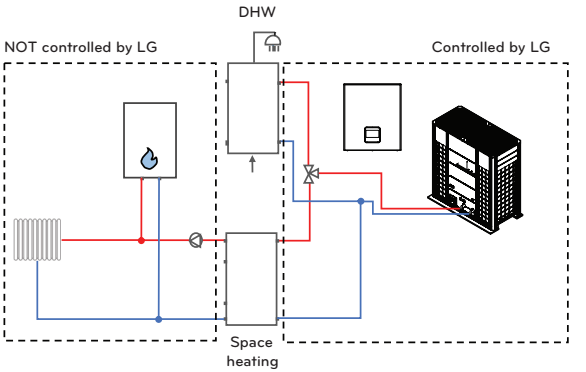

Layout 3

Boiler output= Heating & DHW

DHW by heat pump deactivated (⟶ DIP switch SW2/2&3)

The boiler is connected to the space heating circuit and covers the DHW demand throughout the year. The heat pump is used for space heating above Bivalent temperature only.

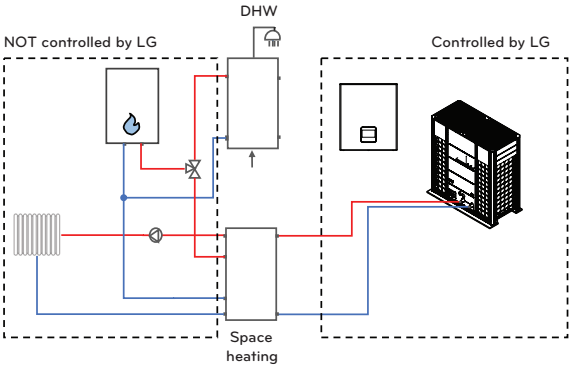

NOTE

In any case, the boiler is not controlled actively. Only it is released and then must operate according its own controls. The External pump output should not be used for the secondary pump, because it will be deactivated, when the heat pump is not in operation!

Configuration - Select outdoor air sensor

Setting defines if the pre-installed air sensor (mounted at grille of outdoor unit) or a dedicated outside sensor (wall-mounted / accessory) is used for weather-dependent operation (Auto mode). It is highly recommended to use wall-mounted sensor – especially when the outdoor unit is exposed to sunlight.

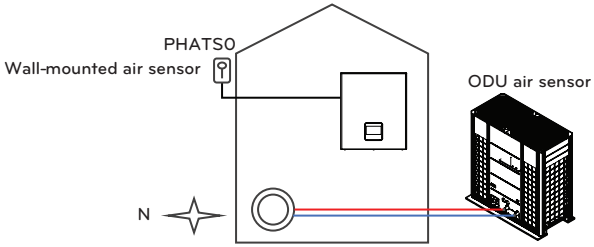

NOTE

Even if wall-mounted sensor is used, the sensor at outdoor unit must NOT be dis-connected, as it is still used to control the refrigerant cycle!
To select 'Wall-mounted air sensor', a dedicated accessory (PHATS0) is required.

General - Anti-freezing option

This setting defines the level of frost protection, when the Remote control is turned off.

Setting	Detection	Case	Operation
Type1	Outside air temp. + Outlet water temp.	Outside temp. < 0 °C AND Outlet water temp. ≤ 20 °C	Pump always ON
		Outside temp. ≥ 0 °C AND Outlet water temp. > 20 °C	Pump always OFF
		Except for above two cases	Pump intermittently ON
Type2	Outside air temp.	Outside temp. < 9 °C	Pump intermittently On
		Outside temp. ≥ 9 °C	Pump always OFF

⚠ CAUTION

If the setting is changed to ‚Type2' there is an increased risk of freezing!

General - Backup heater release temp.

Depending on local climate conditions, it is necessary to change the temperature condition in which backup heater is released. The backup heater operates in 'Bivalent-parallel' to heat pump cycle. It means, below the set outside temperature is released, but it will only run if the target temperature is not reached by cycle.

NOTE

DIP switches SW2-6/7 defines if half or full capacity of electric heater is used to support the heating. If full capacity is enabled, the steps are released based on gap between target and actual temperature.

1) TOL = -25 °C

2) Heating design temp. (Seasonal auto temp/Outdoor temp/O1)

3) General/Backup heater release temp

4) No heating temp. (Seasonal auto temp/Outdoor temp/O2)

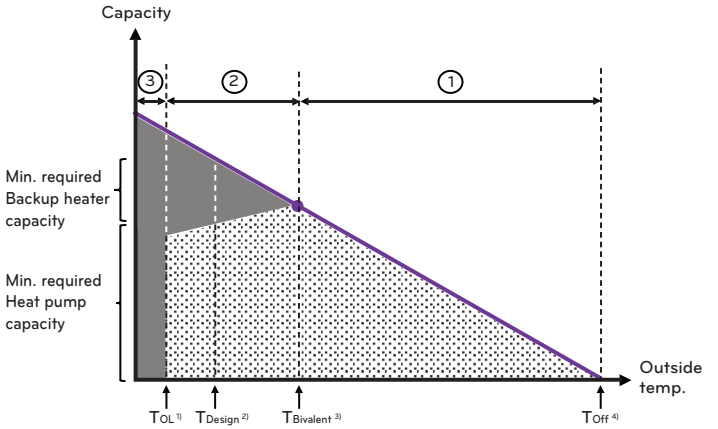

①	Heat pump only
②	Heat pump+ Backup heater support
③	Backup heater only (Emergency operation)

General - Screed drying

This function is used to increase the temperature of a newly installed underfloor heating system. It prevents that the cement is heated too fast and breaks. After activation, the main screen displays „Screed drying“ and the step in progress at the bottom of the screen.

- Step: By default the program starts with Step1. If screed drying was interrupted, it is possible to commence from any other step.
- Max. temp.: Defines the peak temperature.
- Step 8 Holding: Defines the time how long the Max. temperature is kept.

	Step										
	1	2	3	4	5	6	7	8	9	10	11
Outlet temp. in °C	25	Max. temp.	Off	25	35	45	Max. temp.	Max. temp.	45	35	25
Duration in hours	72	96	72	24	24	24	24	Holding time	72	72	72

⚠ CAUTION

The set Max. temp. must align with the specification provided by manufacturer of the underfloor heating!

NOTE

- If the upper limit setting value of the heating LW temperature is 55 °C or lower, it is set to 55 °C forcibly. If the lower limit setting value of the heating LW temperature is 25 °C or higher, it is set to 25 °C forcibly.
- During Screed drying operation, button input - except for installer functions - and temperature display is restricted.
- When the power is applied again after a power outage during product operation, the product operation state before power failure is remembered and the product is automatically operated.
- Screed drying operation stops when an error occurs. When error is cleared, screed drying program re-starts. (However, if the wired remote control is reset to the error occurrence state, it is compensated in the unit of one day)
- Upon releasing after an error, Screed drying operation may take up to 1 minute of waiting time after boot up. (The Screed drying operation status is judged as 1 minute cycle.)
- During Screed drying operation, Silent mode, DHW heating, Solarthermal heating is set to Off!
- During Screed drying operation, timers and reservations are not executed!
- After all steps are completed, set the function to 'Off'!

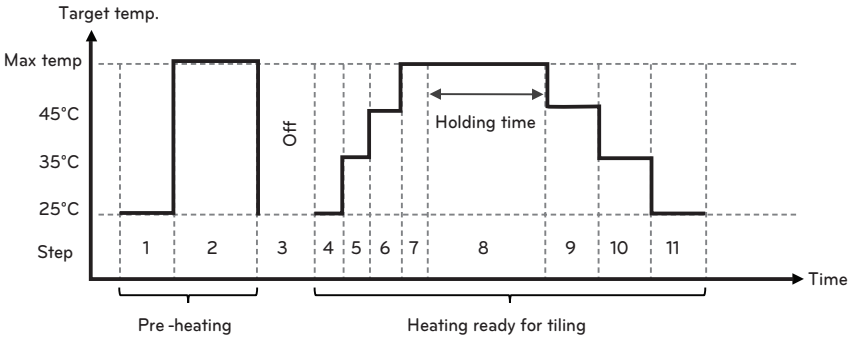

General – Alternating defrost

This function is used to prevent that the outdoor units defrost at the same time. If the outdoor units are defrosting at the same time, the heating capacity drops a lot. To reduce the drop of heating capacity, the outdoor units are defrosting alternately.

Circuit 1(2) - Room heating - Water heating set temperature

- This setting limits the water temperature range applied to Heating operation that the User can set manually in the Remote controller

Circuit 1(2) - Room cooling - Water cooling set temperature

- This setting limits the water temperature range applied to Cooling operation that the User can set manually in the Remote controller.

NOTE

- If underfloor system is used for cooling, it is very important to keep leaving water temperature higher than 16 °C. Otherwise, dew condensation can occur on the floor.
- In case of humid environment, do not set leaving water temperature below 18 °C.
- Do not use radiators for cooling! If cold water enters the radiators, dew will appear on the surface of the radiator.
- If Fan coil units (FCU) are used, it is possible to cool the water down to 5 °C.
- If FCU are used together with other types of emitters , the 2way-valve should be installed to block circuits not suitable for cold water.

Auto mode - Seasonal auto temp.

If mode is set to Auto, the target temperature is adapted to outside air temperature.

This way of control is much more energy efficient than heating(cooling) mode with fixed target temperature. If 'Mode' is set to 'Heating & Cooling', it is possible to define outdoor temperatures at which the unit switch-over from Heating to Off to Cooling and vice versa.

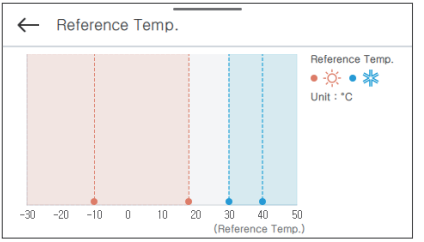

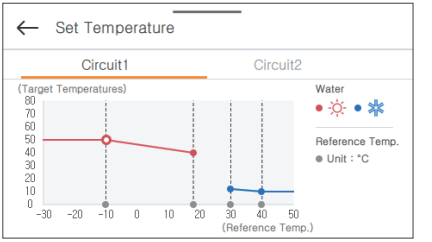

Setting	Description	Control method	Range	Default		Boundary
				Circuit 1	Circuit 2	
O1	Heating design temp.	Water	-25 ~ 35 °C	-10 °C	-10 °C	O1 ≤ O2 -1
O2	Heating limit temp.			18 °C	18 °C	O2 ≥ O1 +1 O2 ≤ O3 -5
O3	Enable cooling		10 ~ 46 °C	30 °C	30 °C	O3 ≥ O2 +5 O3 ≤ O4 -1
O4	Cooling design temp.			40 °C	40 °C	O4 ≥ O3 +1
W1	High temp. (Heating)		15 ~ 65 °C	50 °C	35 °C	W1 ≥ W2
W2	Low temp. (Heating)			40 °C	28 °C	W2 ≤ W1
W3	High temp. (Cooling)		5 ~ 27 °C	12 °C	18 °C	W3 ≥ W4
W4	Low temp. (Cooling)			10 °C	16 °C	W4 ≤ W3

Domestic hot water - DHW temperature settings

The DHW target temperature is set in Main screen by User. 'DHW set temp range' will limit the setting range. The type and volume of the tank, as well as the consumption should be taken into account.

Case 1: 'DHW target temp.' set lower than 'Compressor cycle limit temp.'

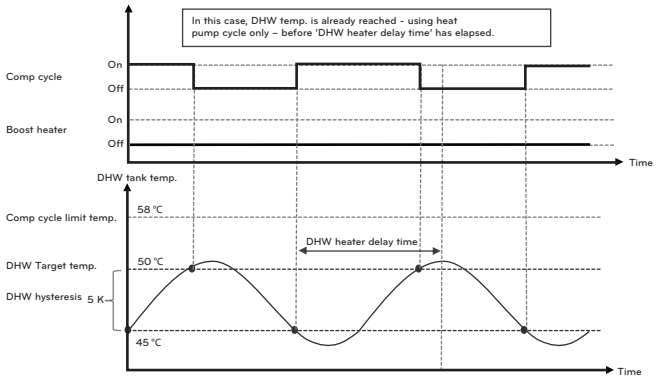

Case 2: 'DHW target temp.' set higher than 'Compressor cycle limit temp.'

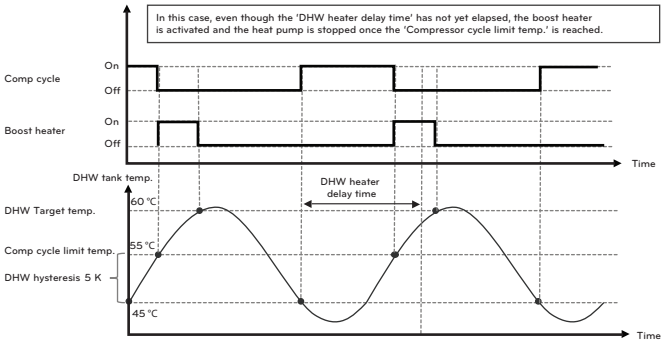

NOTE

If 'DHW target temp.' is higher than 'Comp. cycle limit temp.' (Case 2), the Cycle limit temp. will be used as reference for 'DHW hysteresis'!

Set 'DHW target temp.' as low as possible (with respect to required comfort level) and 'Compressor cycle limit temp.' as high as possible (as long as no error appears).

Domestic hot water - Thermal disinfection

This function can help to prevent legionella bacteria from growing. It is recommended to activate the function if the DHW is not consumed on a regular base.

In order to kill the bacteria, a temperature of 70 °C or higher is recommended. For this purpose it is necessary to install and activate an electric boost heater.

During Thermal disinfection, the target hot water temp. is increased for a certain period of time.

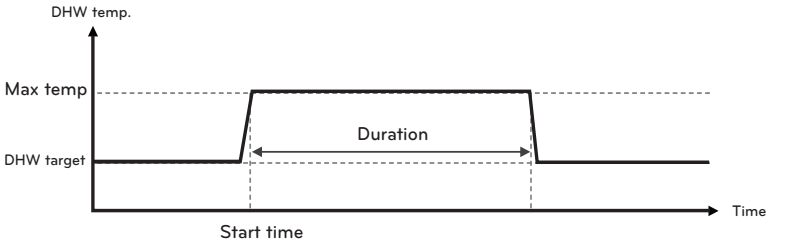

Domestic hot water - DHW heating duration
Domestic hot water - DHW electric re-heating

The following settings can be used to limit the duration of DHW heating and DHW boost heater:

- Domestic hot water - DHW heating duration - Active time:
  Maximum time how long DHW heating by heat pump cycle is activated, until operation mode returns to space heating
- Domestic hot water - DHW heating duration - Stop time:
  After DHW heating by heat pump cycle has stopped, it won't commence before 'Stop time' time has elapsed. The Boost heater might be used.
- Domestic hot water - DHW electric re-heating - DHW heater delay time:
  Time gap between start of DHW heating by cycle and release of DHW boost heater.

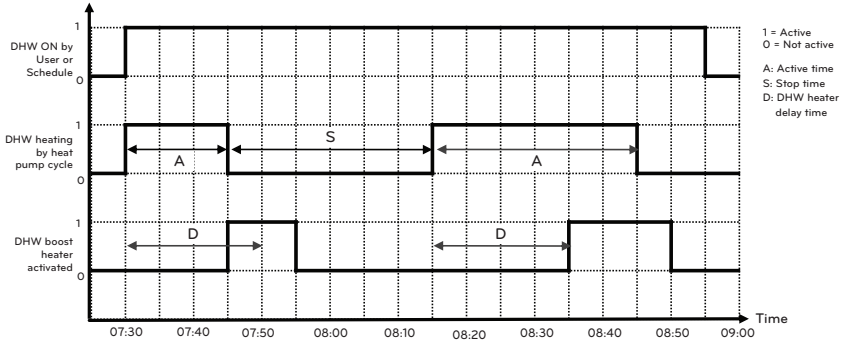

Time	Event
7:30	The User activates the DHW function in the Remote controller. DHW heating starts by using the heat pump cycle, as thermo-on condition is reached.
7:45	The DHW boost heater is activated, even though the 'DHW boost heater delay time' has not yet ended. This is because the DHW temp. reached the 'Compressor cycle limit temp.' The compressor cycle turns off to prevent High-pressure error. The 'Active time' immediately ends and 'Stop time' counter starts.
7:50	The 'DHW heater delay time' (20 min) ends, but it has no effect, because the heater is already operating.
7:55	After reaching the DHW set point, DHW heating stops.
8:10	The DHW temperature has dropped below set point again, but the DHW heating is not started due to 'Stop time' (30 min).
8:15	After end of 'Stop time', DHW heating commences using the heat pump cycle only, because the DHW temp. is lower than 'Compressor cycle limit temp.'
8:35	The DHW boost heater is enabled, after boost heater delay time. The heater starts, because DHW target temp. is not reached. The Compressor cycle remains active, because DHW temp. is still lower than 'Compressor cycle limit temp.'
8:45	After end of 'Active time', the heat pump cycle stops. DHW heating commences using the Boost heater only.
8:50	The DHW target temperature is reached. The heater stops.
8:55	The User turns off DHW heating in the Remote controller.

Domestic hot water - DHW re-circulation

In this menu, the recirculation pump can be activated and the pattern of operation is defined.

NOTE

Operation times of the Recirculation pump should be limited to times when comfort is really needed. If the pump is released for long time, energy consumption may increase a lot due to heat dissipation into the building and need to re-heat the hot water tank!

Example)

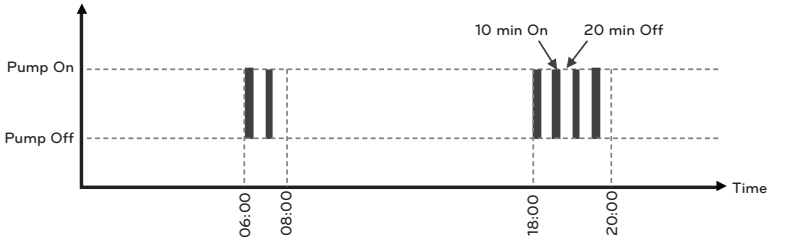

Installer level

Setting - Domestic hot water - DHW re-circulation - Enable re-circulation = Use
Setting - Domestic hot water - DHW re-circulation - On = 10 min
Setting - Domestic hot water - DHW re-circulation - Off = 20 min

NOTE

A schedule (accessible via Main screen) becomes available, after 'Enable recirculation' is set to 'Use'.

User level

1. Schedule - DHW Recirculation - Usage = Use
   Schedule - DHW Recirculation - Time = 06:00 ~ 07:00
   Schedule - DHW Recirculation - Day = Everyday
2. Schedule - DHW Recirculation - Usage = Use
   Schedule - DHW Recirculation - Time = 18:00 ~ 20:00
   Schedule - DHW Recirculation - Day = Everyday

NOTE

If you set the start time before the current time, the pump will be activated tomorrow at the set time.

Example: If you set times as above and it is 19:00 now, the pump will be activated tomorrow at 06:00 for the first time!

Solarthermal system - Solar collector operating range
Solarthermal system - Solar tank temp. limit
Solarthermal system - Solarthermal dT

Basically, the Solar pump starts if the Collector temperature (TB_SENSOR/SOLAR) is higher than the temperature at bottom part of the DHW tank (CN_TH4/WATER TANK SENSOR(B)). By default, the pump starts when the collector is 8 degrees warmer and stops when it is only 2 degrees warmer. This is because some heat losses can be expected on the way from roof to the technical room.

Additionally, the pump is turned off, when either the collector or the tank reaches it's maximum temperature. The values can be adjusted based on local conditions.

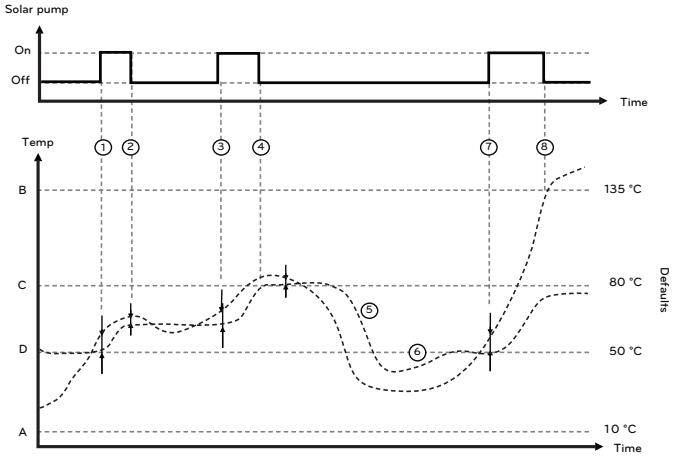

A) Solarthermal system - Solar collector operating range - Min
B) Solarthermal system - Solar collector operating range - Max
C) Solarthermal system - Solar tank temp limit - Max
D) DHW target temperature (User setting)

No	Event
1	Solar pump starts, because Collector temp. is eight degrees warmer than the tank
2	Solar pump stops, because Collector temp. is only two degrees warmer.
3	After cloudy period, the Collector temp. rises again. Solar pump starts, because Collector temp. is again eight degrees warmer than the tank.
4	The collector is still five degrees warmer, but the pump stops, because the tank has reached its maximum temperature of 80°C.
5	In the evening, the tank temperature drops due to consumption.
6	The heat pump re-heats the DHW tank up to its setpoint of 50°C, as the collector is not hot enough.
7	The next morning, the Solar pump starts, because Collector temp. is eight degrees warmer than the tank.
8	The collector has reached its maximum temperature of 135°C. The pump stops. The solar fluid inside of the collector evaporates and pushes the liquid into the pipeworks. The Solar system is at standstill.

Service - Pump test run

'Test run' will activate the Main pump for 1 hour. During this period, the pump will be turned on and off intermittently to purge air from the cycle.
Based on setting 'Configuration/External pump', the External pump will be activated, too.
The operation can be stopped by pushing the On/Off button on the Remote controller.

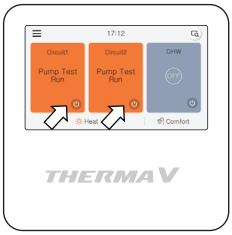

NOTE

The settings for Dry contact should be disabled to use the Pump test run function.
Connectivity - Dry contact - CN-CC = D/C Not installed
Connectivity - CN_EXT = Not use
After finishing the Test run, make sure to change back to previous settings.

Service - Actuator test - Test mode
Service - Actuator test - Pump test
Service - Actuator test - Valve test

These functions allow direct activation and de-activation of individual pumps and valves to check correct wiring and hydronic connection.

NOTE

The settings for Dry contact should be disabled to use the Actuator test function.
Connectivity - Dry contact - CN-CC = D/C Not installed
Connectivity - CN_EXT = Not use
After finishing the Actuator test, make sure to change back to previous settings.

Service - Frost protection temperature

A frost protection function prevents freeze up of water pipes. If any pipe sensor measures a temperature below 4°C (Default), the water pump and backup heater are turned on.

Defrosting operation is blocked if the leaving water temperature drops below 4 °C (Default) and it won't start until a temperature of 15 °C (Default) is reached.

If anti-freeze (glycol) is added to the water, the permitted temperature level can be as low as -1 °C(lowered by 5 degrees) down to -21 °C (lowered by 25 degrees).

All related temperatures will be shifted in the same way. For example, if 'Frost Protection Temp.' is selected as -1 °C, all temperatures that are the basis for judging frost protection are shifted by 5 degrees, too.

Consequently, the frost protection will be cancelled at a water temperature of 10 °C instead of 15 °C.

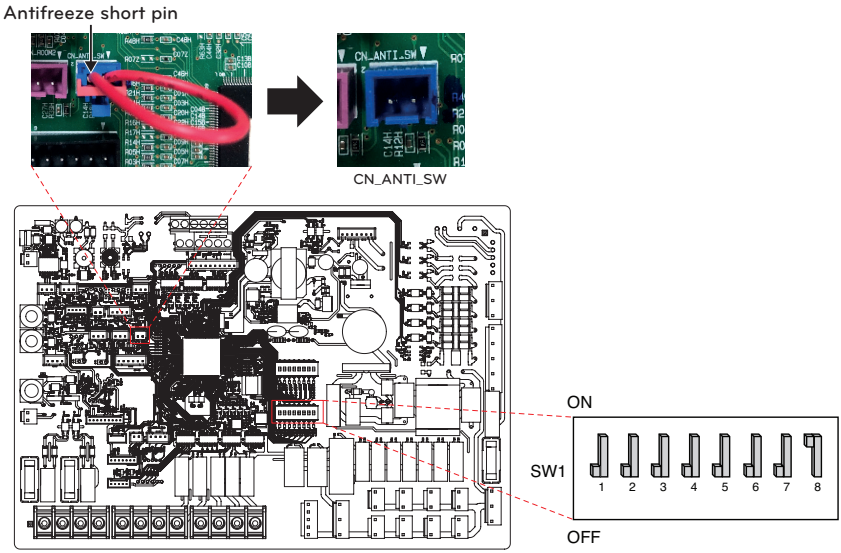

NOTE

Before change of setting is applied, the antifreeze short pin (CN_ANTI_SW) must be removed and DIP switch SW1 - No.8 must be on.
Frost protection must be tested with a refractometer on a frequent basis!

Connectivity - Modbus address(HEX)

This function allows control of the heat pump by external devices.

NOTE

To use this function DIP switch No.1 of SW1 must be set to ON and No.2 to ON.

Modbus memory map

- Baud Rate : 9 600 bps
- Stop Bit : 1 stop bit
- Parity : None Parity

Coil Register (0x01)

Register	Description	Value explanation
00001	Enable/Disable (Heating/Cooling)	0 : Operation OFF 1 : Operation ON
00002	Enable/Disable (DHW)	0 : Operation OFF 1 : Operation ON
00003	Silent Mode Set	0 : Silent mode OFF 1 : Silent mode ON
00004	Trigger Disinfection operation	0 : Keep status 1 : Operation start
00005	Emergency Stop	0 : Normal operation 1 : Emergency stop
00006	Trigger Emergency Operation	0 : Keep status 1 : Operation Start
00007	Active Power Limitation	0: Not used 1: Limit power acc. Reg. 40025

Discrete Register (0x02)

Register	Description	Value explanation
10001	Water flow status	0 : Flow rate ok 1 : Flow rate too low
10002	Water Pump status	0 : Water Pump OFF 1 : Water Pump ON
10003	Ext. Water Pump status	0 : Water Pump OFF 1 : Water Pump ON
10004	Compressor status	0 : Compressor OFF 1 : Compressor ON
10005	Defrosting status	0 : Defrost OFF 1 : Defrost ON
10006	DHW heating status (DHW Thermal On/Off)	0 : DHW inactive 1 : DHW active
10007	DHW Tank disinfection status	0 : Disinfection inactive 1 : Disinfection active
10008	Silent mode status	0 : Silent mode inactive 1 : Silent mode active
10009	Cooling status	0 : No cooling 1 : Cooling operation
10010	Solar pump status	0 : Solar pump OFF 1: Solar pump ON
10011	Backup heater (Step 1) status	0 : OFF 1 : ON
10012	Backup heater (Step 2) status	0 : OFF 1 : ON
10013	DHW boost heater status	0 : OFF 1 : ON
10014	Error status	0 : no error 1 : error state
10015	Emergency Operation Available (Space heating/cooling)	0 : Unavailable 1 : Available
10016	Emergency Operation Available (DHW)	0 : Unavailable 1 : Available
10017	Mix pump status	0 : Mix pump OFF 1 : Mix pump ON

Input Register (0x03)

Register	Description	Value explanation
30001	Error Code	Error Code
30002	ODU operation Cycle	0 : Standby(OFF) 1 : Cooling 2 : Heating
30003	Water inlet temp.	[0.1 °C ×10]
30004	Water outlet temp.	[0.1 °C ×10]
30005	Backup heater outlet temp.	[0.1 °C ×10]
30006	DHW tank water temp.	[0.1 °C ×10]
30007	Solar collector temp.	[0.1 °C ×10]
30008	Room air temp. (Circuit 1)	[0.1 °C ×10]
30009	Current Flow rate	[0.1 LPM ×10]
30010	Flow temp. (Circuit 2)	[0.1 °C ×10]
30011	Room air temp. (Circuit 2)	[0.1 °C ×10]
30012	Energy State input	0 : Energy state 0; 1 : Energy state 1….
30013	Outdoor Air temp.	[0.1 °C ×10]
30014	Water pressure	[0.1 bar ×10]
39998	Product Group	0x8X (0x80, 0x83, 0x88, 0x89)
39999	Product Info.	Split : 0 Monobloc : 3 High Temp. : 4 Medium Temp. : 5 System Boiler : 6

Holding Register (0x04)

Register	Description	Value explanation
40001	Operation Mode	0 : Cooling 4 : Heating 3 : Auto
40002	Control method (Circuit 1/2)	0 : Water outlet temp. control 1 : Water inlet temp. control 2 : Room air control
40003	Target temp (Heating/Cooling) Circuit 1	[0.1 °C ×10]
40004	Room Air Temp. Circuit 1	[0.1 °C ×10]
40005	Shift value(Target) in auto mode Circuit 1	1K
40006	Target temp (Heating/Cooling) Circuit 2	[0.1 °C ×10]
40007	Room Air Temp. Circuit 2	[0.1 °C ×10]
40008	Shift value(Target) in auto mode Circuit 2	1K
40009	DHW Target temp.	[0.1 °C ×10]
40010	Energy state input	0 : Not Use 1 : Forced off (equal to TB_SG1=close / TB_SG2=open) 2 : Normal operation (equal to TB_SG1=open / TB_SG2=open) 3 : On-recommendation (equal to TB_SG1=open / TB_SG2=close) 4 : On-command (equal to TB_SG1=close / TB_SG2=close) 5 : On-command step 2 (++ Energy Consumption compared to Normal) 6 : On-recommendation Step 1 (+ Energy Consumption compared to Normal) 7 : Energy Saving mode (- Energy Consumption compared to Normal) 8 : Super Energy saving mode (-- Energy Consumption compared to Normal)
40025	Power Limitation value	0.1 kW ~ 25.0 kW * Set the power limit value to be distributed to each outdoor unit. Example: Total power limitation value = 60.0 kW ODU Install Count = 3 units → Power Limitation Setting = 60.0 kw / 3 = 20.0 kW

Connectivity - CN_EXT

Instead of external Dry contact, CN-EXT can be used to lock the heat pump by external signals.

Setting	Contact input	Operation*	Remark
Not use	-	-	CN_EXT is not used
Simple operation	Open	Operation "Off"	In case of simple operation, operation on/off is possible as per either the remote controller or external input signal.
	Close	Operation "On"	
Simple Dry contact	Open	Operation "Off" with dry contact lock	In this case, "Operation on" is possible only with the Central controller.
	Close	Lock released	Release dry contact lock setting and "operation on" is possible depend on dry contact auto setting Follows setting 'Dry contact mode': Auto = Contact closed → Operation on Manual = Contact closed → Keep on "operation off" state, but "operation on" is possible by remote controller manually
Single Emergency stop	Open	Emergency stop with forced lock	In this case, "Operation on" is impossible with any other controller.
	Close	Forced lock released	Release forced lock and keep on "operation off" state, but "operation on" is possible by remote controller manually Priority: Emergency stop lock > Central control lock > Dry contact lock

* This operation on / off means remote controller of / off for heating & cooling.

Connectivity - 3rd party boiler

Either the heat pump or the boiler is used for space heating

Three different modes are available to switch-over between heat pump and boiler:

- Manual: The boiler is activated and de-activated by User setting 'Function/3rd party boiler'.
- Biv-alternative: The boiler output is activated based on outdoor temperature. The bivalent temperature (Default: -7 °C) and the switch-over hysteresis (Default: 4 K) can be adjusted by setting.
- Biv-parallel : Automatic release of boiler. Below bivalent temperature, the heat pump is still in operation. The boiler is activated additionally, if the heat pump alone cannot meet the target temperature within reasonable time. The bivalent temperature (Default: -7 °C) and the switch-over hysteresis (Default: 4 K) can be adjusted by setting. The operation limit temperature is according to the type of model.

NOTE

Prices for electricity and fuel, as well as the maximum capacity of the heat pump must be considered when changing the Bivalent temp.

Biv-alternative

1) Seasonal auto temp / Outdoor temp / O1
2) Connectivity / 3rd party boiler / Temp
3) Connectivity / 3rd party boiler / Hysteresis
4) Seasonal auto temp / Outdoor temp / O2

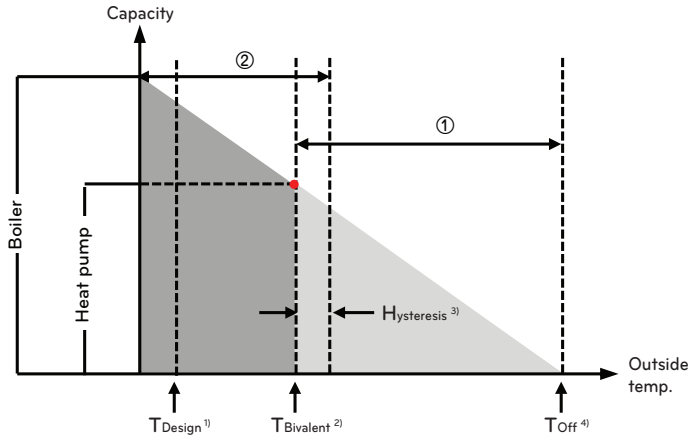

①	Heat pump only
②	Boiler only

Biv-parallel

1) Seasonal auto temp / Outdoor temp / O1
2) Connectivity / 3rd party boiler / Temp (BP)
3) Connectivity / 3rd party boiler / Hysteresis
4) Seasonal auto temp / Outdoor temp / O2
5) Operation Limit temp (AP)
   - HM***HF U*** = -28°C
   - HM***MRS U*** = -25°C

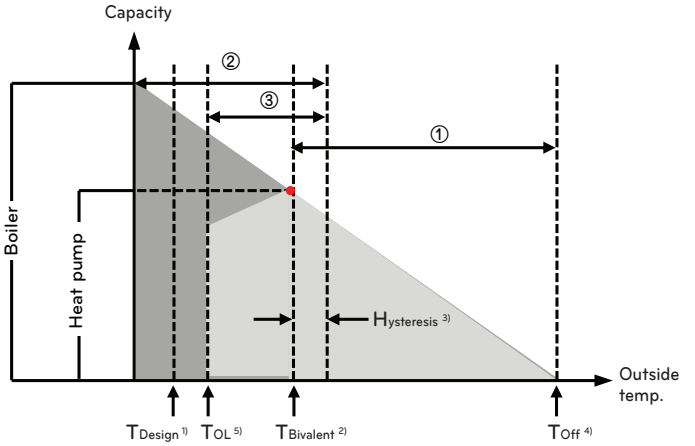

①	Heat pump only
②	Boiler only
③	Heat pump + Boiler

Connectivity - Energy state

The sub menu 'Energy state' can be used to influence the heat pumps's operation based on availability of renewable energy - for instance from PV-panels.

There are two options to make use of this logic:

- Use Modbus: LG ESS or SG-Ready or another third-party device is connected by Modbus serial line.
- Use Digital inputs: LG ESS or SG-Ready or another third-party controller(e.g. SmartHome controller of PV inverter) is connected by 230 V inputs.

Using Modbus RTU allows to use eight different energy states, while Digital inputs provides four different energy states.

Digital inputs (TB_SG)		Energy state	Mode	Default	Range
ES1	ES2				
Close	Open	1	Heating	Off	Fixed
			Cooling	Off	Fixed
			DHW	Off	Fixed
Open	Open	2	Heating	Normal	Fixed
			Cooling	Normal	Fixed
			DHW	Normal	Fixed
Open	Close	3	Heating	2	Fixed
			Cooling	+/- 0	Fixed
			DHW	5	Fixed
Close	Close	4	Heating	+/- 0	Fixed
			Cooling	+/- 0	Fixed
			DHW	Target: 80°C	Fixed
-	-	5	Heating	5	0 ~ +30
			Cooling	-5	-30 ~ 0
			DHW	30	0 ~ +50
-	-	6	Heating	2	0 ~ +30
			Cooling	-2	-30 ~ 0
			DHW	10	0 ~ +50
-	-	7	Heating	-2	-30 ~ 0
			Cooling	2	0 ~ +30
			DHW	+/- 0	-50 ~ 0
-	-	8	Heating	-5	-30 ~ 0
			Cooling	5	0 ~ +30
			DHW	+/- 0	-50 ~ 0

NOTE

Use setting 'Digital inputs assignment' to replace Energy state 3 and/or 4 with any of Energy states 3~8.
When connected to SG Ready, the Power Limitation function operates when ES1 is Close.

COMMISSIONING

Before starting operation, pre-check points are described in this chapter. Some comments about maintenance and how to do troubleshooting are presented.

Check List before Starting Operation

⚠ CAUTION

Turn off the power before changing wiring or handling product.

No	Category	Item	Check Point
1	Electricity	Field wiring	• All switches having contacts for different poles should be wired tightly according to regional or national legislation. • Only qualified person can proceed wiring. • Wiring and local-supplied electric parts should be complied with European and regional regulations. • Wiring should be following the wiring diagram supplied with the product.
2		Protective devices	• Install ELB (earth leakage breaker) with 30 mA residual current. • ELB of Backup heater located inside of Hydro unit should be turned on before starting operation.
3		Earth wiring	• Earth should be connected. Do not earth to gas or city water pipe, metallic section of a building, surge absorber, etc.
4		Power supply	• Use dedicated power line.
5		Terminal block wiring	• Connections on the terminal block (inside the control box of the unit) should be tightened.
6	Water	Charged water pressure	• After water charging, the pressure gauge (in front of the unit) should indicate 2.0~2.5 bar. Do not exceed 10 bar.
7		Air purge	• During water charging, air should be vented through air purges until water is spilling out. After all air is released, check to close all air vents tightly. There should be no noise caused by circulating air bubbles in any part of the system.
8		Shut-off valve	• Two shut-off valves (Field supply) - located at the end of water inlet pipe and water outlet pipe of the unit) should be open.
9		By-pass valve	• A device that ensures the minimum flow rate (e.g. Bypass valve, hydronic separator, buffer tank) should be installed and adjusted to secure enough water flow rate. If water flow rate is low, flow switch error (CH14) can occur.
10	Product Installation	Hang to the wall	• As the unit is hung on the wall, vibration or noise can be heard if the unit is not fixed tightly. • If the unit is not fixed tightly, it can fall down during operation.
11		Parts inspection	• There should be no apparently damaged parts inside the unit.
12		Refrigerant leakage	• Refrigerant leakage is a serious danger. If leakage found, contact qualified LG air conditioning installation person.
13		Drainage treatment	• While cooling operation, condensed dew can drop down to the bottom of the unit. In this case, prepare drainage treatment (for example, vessel to contain condensed dew) to avoid water drop.

To assure best performance of THERMA V., it is required to perform periodical check and maintenance. It is recommended to proceed following check list for once a year.

⚠ CAUTION

Turn off the power before proceeding maintenance.

No	Category	Item	Check Point
1	Water	Water pressure	• In normal state, the pressure gauge (in front of the unit) should indicate 2.0~2.5 bar. • If the pressure is less than 0.3 bar, please recharge the water.
2		Strainer (Water filter)	• Close the shut-off valves and disassemble strainer. Then wash the strainer to make it clean. • While disassembling the strainer, be careful for water flood out.
3		Safety valve	• Open the switch of the safety valve and check if water is flood out through the drain hose. • After checking, close the safety valve.
4	Electricity	Terminal block wiring	• Look and inspect if there is loosen or defected connection on the terminal block.

Starting Operation

Check before Starting Operation

- Check to see whether there is any refrigerant leakage, and check whether the power or transmission cable is connected properly.
- Confirm that 500 V megger shows 2.0 MΩ or more between power supply terminal block and ground. Do not operate in the case of 2.0 MΩ or less.

NOTE

Never carry out mega ohm check over terminal control board.
Otherwise the control board may break.

Immediately after mounting the unit or after leaving it turned off for an extended length of time, the resistance of the insulation between the power supply terminal board and the ground may decrease to approx. 2.0 MΩ as a result of refrigerant accumulation in the internal compressor.

If the insulation resistance is less than 2.0 MΩ, turn on the main power supply.

- When the power is applied for the first time, operate the product after preheating for 6 hours. To protect the unit by increasing the oil temperature of the compressor.

Starting Operation flow chart

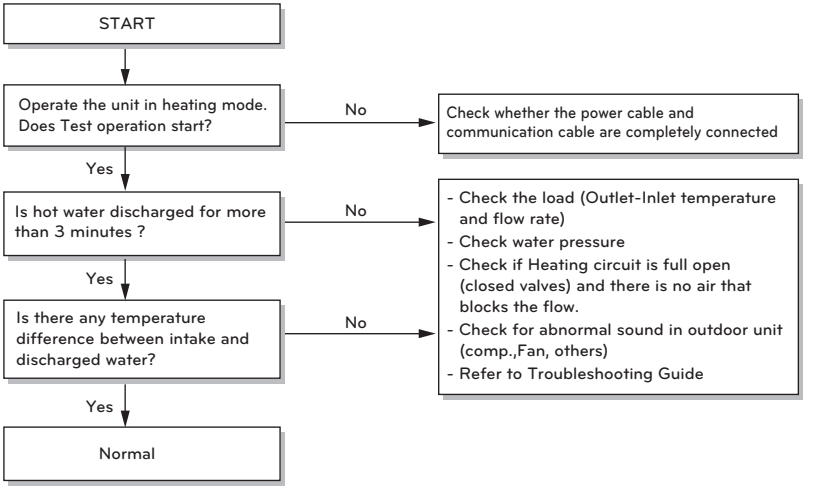

Trouble shooting

If THERMA V operates not properly or it does not start operation, please check following list.

⚠ CAUTION

Turn off the power before proceeding troubleshooting.

		Critical trouble / Error	Heavy trouble	Slight trouble	Option trouble
Description		Problem which can stop system operation, and can be resumed only after certificated professional's check.	Compressor cycle trouble. Emergency mode operation is performed by optional electric heater.	In most case, this trouble is concerned with sensor problems.	A problem is found for Option operation such as water tank heating.
Priority [1]		1	2	3	4
Availability of Emergency mode	Heat pump cycle	X	X	O	O [2]
	Backup heater	X	O [3]	O	O [2]
Related error codes (cascade control unit)		03, 09, 15, 16, 20	-	01, 02, 17, 18, 19, 234	08,13,233
Related error codes (outdoor unit) [4]		14, 21, 22, 23, 23, 24, 25, 26, 27, 28, 29, 32, 34, 35, 36, 40 , 41, 43, 44, 45, 46, 49, 50, 51, 52, 53, 57, 60, 62, 65, 67, 71, 75, 76, 77, 79, 86, 87, 90, 91, 92, 105, 106, 107, 111, 113, 114, 115, 116, 145, 150, 151, 153, 182, 193, 194, 237			

1) If more than one trouble occurs ("Duplicated trouble"), the trouble with higher priority defines the consequences (whether Emergency operation is possible or not).

2) Operation possible without optional function that has trouble. For instance, when DHW sensor is broken (CH08), hot water heating is not available.

3) Heating operation only. Not possible to use Cooling function.

4) If the percentage of outdoor units with errors exceeds the system allowance, the cascade control unit determines that there is "heavy trouble" and shuts down all outdoor units.

※ If CH35 occurs from the outdoor unit, the cascade control unit shuts down all outdoor units regardless of system allowance.

NOTE

- Emergency mode operation is activated by pressing OK button on popup-window!
- After power reset, Emergency mode does NOT automatically resume!



Troubleshooting for Problem while Operation

Problem	Reason	Solution
Heating or Cooling is not satisfactory.	• Setting target temperature is not proper.	• Set target temperature correctly. • Check if temperature is water-based or air-based. See 'Remote sensor active' and 'Temp. sensor selection'
	• Charged water is not enough.	• Check pressure gauge and charge more water until pressure gauge is indication 2~2.5 Bar
	• Water flow rate is low.	• Check if strainer gathers too much particles. If so, strainer should be cleaned. • Check if pressure gauge indicates above 4 Bar • Check if water pipe is getting closed due to stacked particles or lime.
Although electric power supply is OK (remote controller displays information), the unit does not start working.	• Water inlet temperature is too high.	• If water inlet temperature is above 57 °C, the unit does not operated for the sake of system protection
	• Water inlet temperature is too low.	• If water inlet temperature is below 5 °C in cooling operation, the unit does not operated for the sake of system protection. Wait while unit warms up the water inlet temperature. • If water inlet temperature is below 15 °C in heating operation, the unit does not operated for the sake of system protection. Wait while unit warms up to 18 °C the water inlet temperature. • If you are not using the back up heater accessory (HA**1M E1), increase the water temperature with the external heat source (heater, boiler). If the problem persists, contact your dealer. • If you want to use the screed drying function, be sure to purchase and install back up hater accessories (HA**1M E1).
Water pump noise.	• Air purging is not completely finished.	• Open the cap of air purge and charge more water until pressure gauge is indicating 2~2.5 Bar • If water does not splash out when the tip(at the top of the hole) is pressed, then air purging is not completed yet. If well purged, the water will splash out like fountain.
	• Water pressure is low.	• Check if pressure gauge indicates above 0.3 Bar. • Check if the expansion tank and pressure gauge operates well.
Water is flood out through drain hose.	• Too much water is charged.	• Flood out water by opening the switch of the safety valve until pressure gauge is indicating 2~2.5 Bar.
	• Expansion tank is damaged.	• Replace the expansion tank.
DHW is not hot.	• Thermal protector of water tank heater is activated.	• Open the side panel of the DHW tank and push the reset button of the thermal protector. (for more detail information, please refer to installation manual of DHW tank.
	• DHW Heating is disabled.	• Select DHW Heating Operation and identify if icon is displayed on the remote controller.

Self-Diagnosis Function

Error Indicator

- This function indicates types of failure in self-diagnosis and occurrence of failure for air condition.
- Error mark is displayed on display window of Indoor units and wired remote controller, and 7-segment LED of outdoor unit control board as shown in the table.
- If more than two troubles occur simultaneously, lower number of error code is first displayed.
- After error occurrence, if error is released, error LED is also released simultaneously.

Error Display

1st,2nd,3rd LED of 7-segment indicates error number, 4th LED indicates unit number.

Ex) 1051 : Error occurrence with error number 105 at No. 1 outdoor unit (=Master unit)
In case of Indoor unit error occurrence, the error number is only shown at remote controller without 7 segment LED of outdoor unit.



Ex) CH ⟶ 01 : Error occurrence with error number 01 (at remote controller)
In case of compressor error occurrence, 7 segment LED of outdoor unit control board will display its error number alternately with compressor number.

* Refer to the DX-Ventilation manual for DX-Ventilation error code.

Display				Title	Cause of Error
Indoor unit related error	0	3	-	Communication error : wired remote con-troller	Failing to receive wired remote controller signal in indoor unit PCB
	0	5	-	Communication error : outdoor unit indoor unit	Failing to receive outdoor unit signal in indoor unit PCB
	0	8	-	Hot water storage tank Temperature sensor	Pipe temperature sensor is open or short
	0	9	-	Indoor EEPROM Error	In case when the serial number marked on EEP- ROM of Indoor unit is 0 or FFFFFF
	1	3	-	Solar heat piping tempera-ture sensor error	Pipe temperature sensor is open or short
	1	4	-	Flow switch error	Flow switch flow detection error
	1	5	-	Over Heating of Water Pipe	Temperature sensor defective or hot water inflow
	1	6	-	AWHP temperature sensor at once error	More than one sensor shows invalid data
	1	7	-	PHEX/Cascade inlet temp. sensor Error	- Incorrect connection between sensor and PCB - PCB fault - Sensor fault
	1	8	-	PHEX/Cascade outlet temp. sensor Error	
	1	9	-	Unit (Electric heater) outlet temp. sensor Error	

Display				Title	Cause of Error
Outdoor unit related error	2	3	0	Refrigerant leak detection error	When the refrigerant leakage sensor detects refrigerant leakage.
	2	3	7	Communication failure between out- door unit and indoor unit	If indoor unit does not receive communication signals from outdoor unit for more than 3 minutes.
	2	3	8	Communication failure between out- door unit controller and indoor unit	When indoor unit control signal is not received from outdoor unit controller.
	2	1	*	Outdoor Unit Inverter Compressor IPM Fault	Outdoor Unit Inverter Compressor Drive IPM Fault
	2	2	*	Inverter Board Input Over Current(RMS) of Outdoor Unit	Outdoor Unit Inverter Board Input Current excess (RMS)
	2	3	*	Outdoor Unit Inverter Compressor DC link Low Voltage	DC charging is not performed at Outdoor Unit after starting relay turn on.
	2	4	*	Outdoor Unit High Pressure Switch	System is turned off by Outdoor Unit high pressure switch.
	2	5	*	Outdoor Unit Input Voltage High/ Low Voltage	Outdoor unit input voltage is over
	2	6	*	Outdoor Unit Inverter Compressor Start Failure	The First Start Failure by Outdoor Unit Inverter Compressor Abnormality
	2	8	*	Inverter DC link high voltage fault	When the inverter PCB DC link voltage is applied over 780V
	2	9	*	Outdoor Unit Inverter Compressor Over Current	Outdoor Unit Inverter Compressor Fault OR Drive Fault
	3	2	*	Outdoor Unit Inverter Compressor1 High Discharge Temperature	Outdoor Unit Inverter Compressor1 High Discharge Temperature
	3	4	*	High Pressure of Outdoor Unit	High Pressure of Outdoor Unit
	3	5	*	Low Pressure of Outdoor Unit	Low Pressure of Outdoor Unit
	3	6	*	Outdoor unit low compression ratio lim- ited	Outdoor unit low compression ratio limited
	4	0	*	Outdoor Unit Inverter Compressor CT Sensor Fault	Outdoor Unit Inverter Compressor CT Sensor open or short
	4	1	*	Outdoor Unit Inverter Compressor1 Discharge Temperature Sensor Fault	Outdoor Unit Inverter Compressor Discharge Temperature Sensor open or short
	4	2	*	Outdoor Unit Low Pressure Sensor Fault	Outdoor Unit Low Pressure Sensor open or short
	4	3	*	Outdoor Unit High Pressure Sensor Fault	Outdoor Unit High Pressure Sensor open or short
	4	4	*	Outdoor Unit Air Temperature Sensor Fault	Outdoor Unit Air Temperature Sensor open or short

Display				Title	Cause of Error
Outdoor unit related error	4	5	*	Outdoor Unit Heat Exchanger Temperature Sensor Fault	Outdoor Unit Heat Exchanger Temperature Sensor open or short
	4	6	*	Outdoor Unit Suction Temperature Sensor Fault	Outdoor Unit Suction Temperature Sensor open or short
	4	9	*	Outdoor Unit Faulty IPM Temperature Sensor	Outdoor Unit IPM Temperature Sensor short/open
	5	0	*	Omitting connection of R, S, T power of Outdoor Unit	Omitting connection of outdoor unit
	5	1	*	Excessive capacity of indoor units	Excessive connection of indoor units compared to capacity of Outdoor Unit
	5	2	*	Communication error : inverter PCB → Main PCB	Failing to receive inverter signal at main PCB of Outdoor Unit
	5	3	*	Communication error : indoor unit Main PCB of Outdoor Unit	Failing to receive indoor unit signal at main PCB of Outdoor Unit.
	5	7	*	Communication error : Main PCB → inverter PCB	Failing to receive signal main PCB at inverter PCB of Outdoor Unit
	6	0	*	Inverter PCB EEPROM Error of Outdoor Unit	Access Error of Inverter PCB of Outdoor Unit
	6	2	*	Outdoor Unit Inverter Heatsink High Temperature	System is turned off by Outdoor Unit Inverter Heatsink High Temperature
	6	5	*	Outdoor Unit Inverter Heatsink Temperature Sensor Fault	Outdoor Unit Inverter Heatsink Temperature Sensor open or short
	6	7	*	Outdoor Unit Fan Lock	Restriction of Outdoor Unit
	7	1	*	Converter CT Sensor Error of Outdoor Unit	Converter CT Sensor open or short of Outdoor Unit
	7	5	*	Outdoor Unit Fan CT Sensor Error	Outdoor Unit Fan CT Sensor open or short
	7	6	*	Outdoor unit fan DC Link high voltage error	Outdoor unit fan DC Link high voltage generation
	7	7	*	Outdoor Unit Fan Over Current Error	Outdoor Unit Fan Current is over 5A
	7	9	*	Outdoor Unit Fan Start Failure Error	Outdoor Unit Fan First Position Sensing Failure
	8	6	*	Outdoor Unit Main PCB EEP- ROM Error	Communication Fail Between Outdoor Unit Main MICOM and EEPROM or omitting EEPROM
	8	7	*	Outdoor Unit Fan PCB EEP- ROM Error	Communication Fail Between Outdoor Unit Fan MICOM and EEPROM or omitting EEPROM
	9	0	*	Water IN temperature sensor Fault	Water IN temperature sensor Open or short
	9	1	*	Water OUT temperature sensor Fault	Water Out temperature sensor Open or short
	9	2	*	No pre-test run	Failure to pre-test run the outdoor unit or repeat automatic address setting after pre-test run Replace Main PCB EEPROM

Display					Title	Cause of Error
Outdoor unit related error	1	0	5	*	Outdoor Unit Fan PCB Communication Error	Failing to receive fan signal at main PCB of Outdoor unit
	1	0	6	*	Outdoor Unit FAN IPM Fault Error	Instant Over Current at Outdoor Unit Fan IPM
	1	0	7	*	Outdoor Unit Fan DC Link Low Voltage Error	Outdoor Unit Fan DC Link Input Voltage is under 380V
	1	1	1	*	Defective outdoor unit noise module PCB	• When there is no communication between the outdoor main PCB and the noise module PCB • PCB harness disconnection or short circuit • Defective noise module PCB
	1	1	3	*	Outdoor Unit Liquid pipe Temperature Sensor Error	Liquid pipe temperature sensor of Outdoor Unit is open or short
	1	1	4	*	Outdoor Unit Subcooling Inlet Temperature Sensor Error	Outdoor Unit Subcooling Inlet Temperature Sensor Error
	1	1	5	*	Outdoor Unit Subcooling Outlet Temperature Sensor Error	Outdoor Unit Subcooling Outlet Temperature Sensor Error
	1	1	6	*	Outdoor Unit Oil Level Sensor Error	Oil Level Sensor of Outdoor Unit is open or short
	1	4	5	*	Outdoor unit Main Board - External Board communication Error	Outdoor unit Main Board - External Board communication Error
	1	5	0	*	Outdoor Unit Discharge Superheat not satisfied	Outdoor Unit Compressor Discharge Superheat not satisfied during 5 Min.
	1	5	1	*	Failure of operation mode conversion at Outdoor Unit	Failure of operation mode conversion at Outdoor Unit
	1	5	3	*	Outdoor Unit Heat Exchanger Temperature Sensor Left Fault	Outdoor Unit Heat Exchanger Temperature Sensor Left Fault
	1	8	2	*	Outdoor unit External Board Main-Sub Micom communication Error	Outdoor Unit Main Board Main-Sub Micom communication failed
	1	9	3	*	Outdoor Unit Fan Heatsink High Temperature	System is turned off by Outdoor Unit Fan Heatsink High Temperature
	1	9	4	*	Outdoor Unit Fan Heatsink Temperature Sensor Fault	Outdoor Unit Fan Heatsink Temperature Sensor open or short

ANNEX

NOTE

The sensor resistance value and the voltage value at both ends may vary depending on the ambient temperature and the value has a deviation of 5 %.
There may be some errors depending on the measurement equipment.

Room air temperature sensors / Wall mounted air sensor (NTC 10kOhm)

Indoor Temp.(°C)	Resistance(kΩ)	Voltage(V)
-10 °C	60 kΩ	4.1 V
-5 °C	44 kΩ	3.9 V
0 °C	33 kΩ	3.6 V
5 °C	25 kΩ	3.4 V
10 °C	0 kΩ	3.1 V
15 °C	15 kΩ	2.8 V
20 °C	12 kΩ	2.5 V
25 °C	10 kΩ	2.2 V
30 °C	8 kΩ	1.9 V
35 °C	6 kΩ	1.6 V
40 °C	5 kΩ	1.5 V
45 °C	4 kΩ	1.3 V

Pipe temperature sensors / Tank temperature sensors (NTC 5 kOhm)

Indoor Temp.(°C)	Resistance(kΩ)	Voltage(V)
-10 °C	29 kΩ	4.1 V
-5 °C	22 kΩ	3.9 V
0 °C	17 kΩ	3.6 V
5 °C	13 kΩ	3.3 V
10 °C	10 kΩ	3 V
15 °C	8 kΩ	2.8 V
20 °C	6 kΩ	2.5 V
25 °C	5 kΩ	2.2 V
30 °C	4 kΩ	1.9 V
35 °C	3.2 kΩ	1.7 V
40 °C	2.6 kΩ	1.5 V
45 °C	2.1 kΩ	1.2 V
50 °C	1.7 kΩ	1 V
55 °C	1.4 kΩ	0.9 V
60 °C	1.2 kΩ	0.8 V
65 °C	1 kΩ	0.7 V

Solar Temperature sensor (PT1000)

Temperature	Resistance (Ω)
-40	842.47
-30	882.11
-20	921.57
-10	960.86
0	1000
10	1039.03
20	1077.94
30	1116.73
40	1155.41
50	1193.97
60	1232.42
70	1270.75
80	1308.97
90	1347.07
100	1385.06
110	1422.93
120	1460.68



LG Electronics Inc. Single Contact Point(EU) :
LG Electronics Deutschland GmbH
Alfred-Herrhausen-Allee 3-5, 65760 Eschborn, Germany

Factory : LG Electronics Inc.
84, Wanam-ro, Seongsan-gu, Changwon-si, Gyeongsangnam-do, KOREA

Eco design requirement
The information for Eco design is available on the following free access website.
https://www.lg.com/global/support/cedoc/cedoc