LG
Life's Good

OWNER'S MANUAL
LED TV*

*Disclaimer
LG LED TV applies LCD screen with LED backlights.

Please read this manual carefully before operating your TV and retain it for future reference.

LY33**
LY34**
LY54**
LW33**

www.lg.com

ENGLISH

TABLE OF CONTENTS

2 TABLE OF CONTENTS

3 LICENSES

3 OPEN SOURCE SOFTWARE NOTICE INFORMATION

4 ASSEMBLING AND PREPARING

4 Unpacking
6 Separate Purchase
7 Parts and Button
8 - Using the Joystick button
9 Lifting and Moving the TV
10 Setting up the TV
10 - Attaching the stand
13 Mounting on a table
16 Mounting on a wall
18 Tidying cables

19 MAKING CONNECTIONS

19 Antenna Connection
20 Adapter Connection
20 Network Setup
20 - Wired network connection
21 Speaker Output Setup
22 Other Connections

30 REMOTE CONTROL

33 MAINTENANCE

33 Cleaning your TV
33 - Screen, frame, cabinet and stand
33 - Power cord

34 TROUBLESHOOTING

35 SPECIFICATIONS

41 IR CODES

42 EXTERNAL CONTROL DEVICE SETUP

42 RS-232C Setup
42 Type of Connector: D-Sub 9-Pin Male
43 RS-232C Configurations
44 Communication Parameters
44 Command Reference List
45 Transmission / Receiving Protocol

WARNING

- If you ignore the warning message, you may be seriously injured or there is a possibility of accident or death.

CAUTION

- If you ignore the caution message, you may be slightly injured or the product may be damaged.

NOTE

- The note helps you understand and use the product safely. Please read the note carefully before using the product.

LICENSES

Supported licenses may differ by model. For more information about licenses, visit *www.lg.com*.

Manufactured under license from Dolby Laboratories. Dolby and the double-D symbol are trademarks of Dolby Laboratories.

The terms HDMI and HDMI High-Definition Multimedia Interface, and the HDMI logo are trademarks or registered trademarks of HDMI Licensing LLC in the United States and other countries.

This DivX Certified® device has passed rigorous testing to ensure it plays DivX® video.

To play purchased DivX movies, first register your device at vod.divx.com. Find your registration code in the DivX VOD section of your device setup menu.

DivX Certified® to play DivX® video up to HD 1080p, including premium content.

DivX®, DivX Certified® and associated logos are trademarks of DivX, LLC and are used under license.

Covered by DivX Patents 7,295,673; 7,515,710; RE45,052; and others available at [*www.divx.com/patents*].

OPEN SOURCE SOFTWARE NOTICE INFORMATION

To obtain the source code under GPL, LGPL, MPL and other open source licenses, that is contained in this product, please visit *http://opensource.lge.com*.
In addition to the source code, all referred license terms, warranty disclaimers and copyright notices are available for download.
LG Electronics will also provide open source code to you on CD-ROM for a charge covering the cost of performing such distribution (such as the cost of media, shipping, and handling) upon email request to opensource@lge.com. This offer is valid for three (3) years from the date on which you purchased the product.

NOTE

- Image shown may differ from your TV.
- Your TV's OSD (On Screen Display) may differ slightly from that shown in this manual.
- The available menus and options may differ from the input source or product model that you are using.
- New features may be added to this TV in the future.
- The TV can be placed in standby mode in order to reduce the power consumption. And the TV should be turned off if it will not be watched for some time, as this will reduce energy consumption.
- The energy consumed during use can be significantly reduced if the level of brightness of the picture is reduced, and this will reduce the overall running cost.

ASSEMBLING AND PREPARING

Unpacking

Check your product box for the following items. If there are any missing accessories, contact the local dealer where you purchased your product. The illustrations in this manual may differ from the actual product and item.

CAUTION

- Do not use any unapproved items to ensure the safety and product life span.
- Any damages or injuries by using unapproved items are not covered by the manufacturer's warranty.
- Some models have a thin film attached on to the screen and this must not be removed.

NOTE

- The items supplied with your product may vary depending on the model.
- Product specifications or contents of this manual may be changed without prior notice due to upgrade of product functions.
- For an optimal connection, HDMI cables and USB devices should have bezels less than 10 mm thick and 18 mm width. Use an extension cable that supports USB 2.0 if the USB cable or USB memory stick does not fit into your TV's USB port.

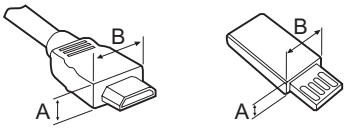

*A ≦ 10 mm

*B ≦ 18 mm

- Use a certified cable with the HDMI logo attached.
- If you do not use a certified HDMI cable, the screen may not display or a connection error may occur. (Recommended HDMI Cable Types)
  - High-Speed HDMI®/™ Cable
  - High-Speed HDMI®/™ Cable with Ethernet

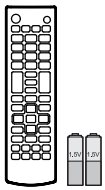

Remote control, batteries (AAA)
(See p.30, 31, 32)

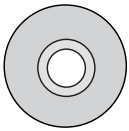

Owner's manual

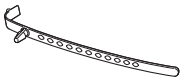

Cable Holder
(Depending on model)



Power cord
(Depending on model)



Stand Screws
4EA, M4 x L14
(Only 42/47/55/60LY34**, 42/47/55/60LY540*, 42/47/55LY541*)
(See p.10, 12)



Stand Screws
4EA, M4 x L20
(Only 32LY34**, 32LY540*, 42/47/55LY541*)
6EA, M4 x L20
(Only 32LY541*)
(See p.10, 11, 12)



Cable Managements
2EA
(Only LY34**, LY540*)
(See p.18)



Wall Mount Spacers
2EA
(Only 42LY34**, 42LY54**)
(See p.17)



Stand Bases
(Only LY34**, LY540*)
(See p.10)

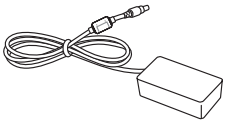

AC-DC Adaptor
(Only LY33**, LW33**)
(Depending on model & country)
(See p.20)

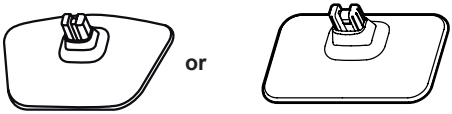

or

Stand Base
(Only LY33**, LW33**)
(Depending on model & country)
(See p.10)

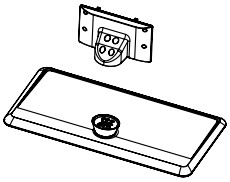

Stand Base/Stand Body
(Only LY541*)
(See p.11, 12)

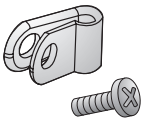

Power Cord Holder/Screw
1EA
(Only 42/47/55LY541*)
(See p.18)



Torx Plus Star-Head Screws
2EA
(Only LY541*)
(See p.11, 12)



Rubbers
2EA
(Only LY541*)
(See p.13)



Washers for Stand Fixing
2EA
(Depending on model)
(See p.15)

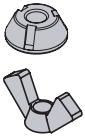

Nuts for Stand Fixing
2EA
(Depending on model)
(See p.15)

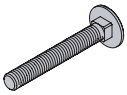

Screws for Stand Fixing
2EA
(Depending on model)
(See p.15)

Separate Purchase

Separate purchase items can be changed or modified for quality improvement without any notification.
Contact your dealer to buy these items.
These devices only work with certain models.
The model name or design may be changed depending on the upgrade of product functions, manufacturer's circumstances or policies.

LG Audio Device

Parts and Button

(*Images may vary depending on models.)

A type : LY34**, LY540*

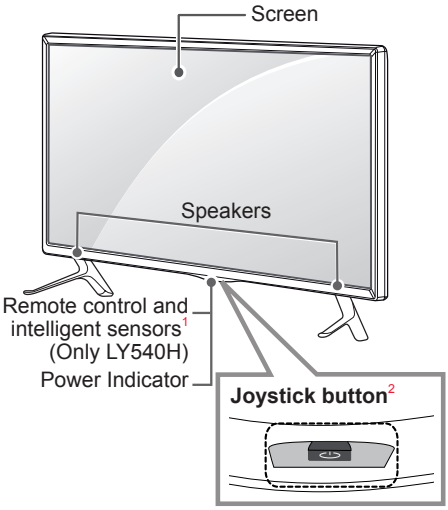

B type : 22/28LY33**, 24LW33**(Except for India)

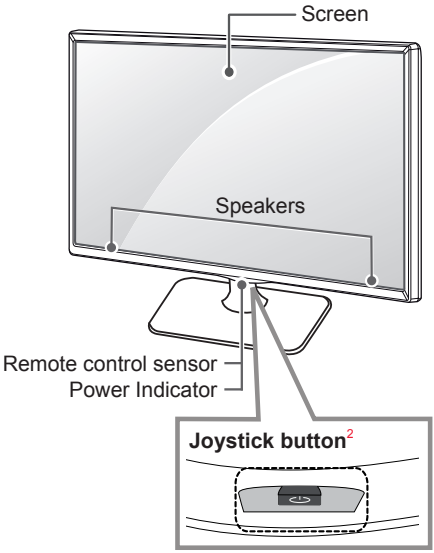

C type : 22/28LY33**, 24LW33** (Only India)

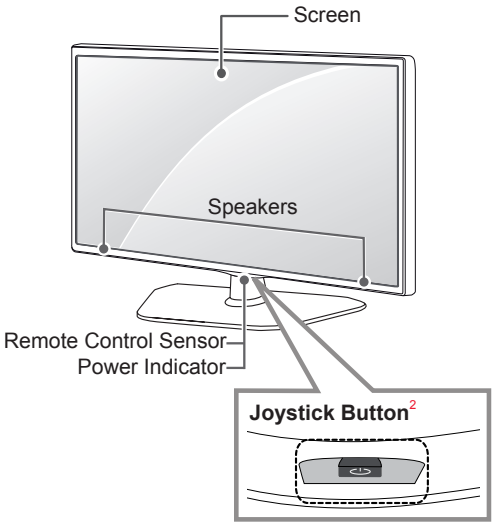

D type : LY541*

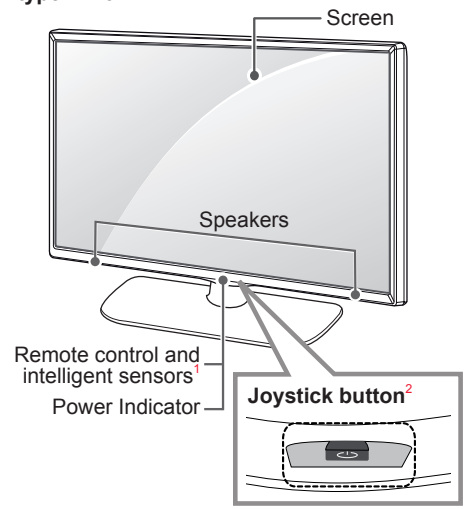

1 Intelligent sensor - Adjusts the image quality and brightness based on the surrounding environment.
2 Joystick Button - This button is located below the TV screen.

NOTE

- You can set the power indicator light to on or off by selecting **OPTION** in the main menus.

Using the Joystick button

You can simply operate the TV functions, pressing or moving the joystick button forward,backward, left or right.
(*Images may vary depending on models.)

Basic Functions

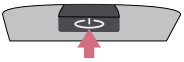	Power On	When the TV is turned off, place your finger on the joystick button and press it once and release it.
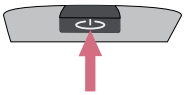	Power Off	When the TV is turned on, place your finger on the joystick button and press it once for a few seconds and release it. (However, if the Menu button is on the screen, pressing and holding the joystick button will let you exit the Menu.)
	Volume Control	If you place your finger over the joystick button and move it left or right, you can adjust the volume level you want.
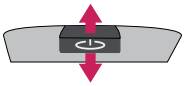	Programmes Control	If you place your finger over the joystick button and move it forward or backward, you can scrolls through the save programmes you want.

NOTE

- When your finger over the joystick button and push it to the forward or backward, left or right, be careful not to press the joystick button. If you press the joystick button first, you may not be able to adjust the volume level and saved programmes.

Adjusting the Menu

When the TV is turned on, press the joystick button one time.
You can adjust the Menu items (⏻, ⚙, ✕, ⏻) moving the joystick button up, down, left or right.

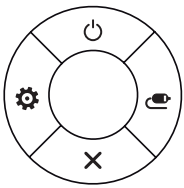	⏻	**TV off**	Turns the power off.
	⚙	**Settings**	Accesses the main menu.
	✕	**Close**	Clears on-screen displays and returns to TV viewing.
	⏻	**Input List**	Changes the input source.

Lifting and Moving the TV

When moving or lifting the TV, read the following to prevent the TV from being scratched or damaged and for safe transportation regardless of its type and size.

CAUTION

- Avoid touching the screen at all times, as this may result in damage to the screen.

- It is recommended to move the TV in the box or packing material that the TV originally came in.
- Before moving or lifting the TV, disconnect the power cord and all cables.
- When holding the TV, the screen should face away from you to avoid damage.

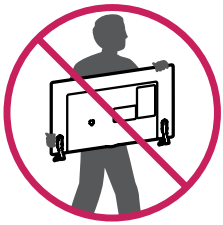

- Hold the top and bottom of the TV frame firmly. Make sure not to hold the transparent part, speaker, or speaker grill area.

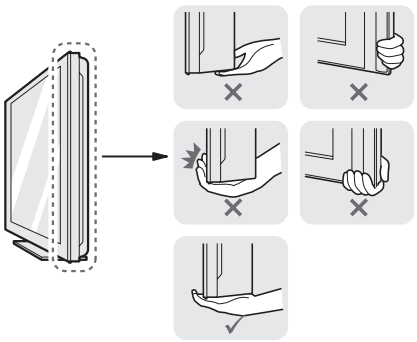

- When transporting a large TV, there should be at least 2 people.
- When transporting the TV by hand, hold the TV as shown in the following illustration.

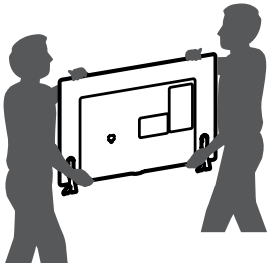

- When transporting the TV, do not expose the TV to jolts or excessive vibration.
- When transporting the TV, keep the TV upright, never turn the TV on its side or tilt towards the left or right.
- Do not apply excessive pressure to cause flexing /bending of frame chassis as it may damage screen.

CAUTION

- When handling the TV, be careful not to damage the protruding joystick button. (Depending on model)



Setting up the TV

Image shown may differ from your TV.

Attaching the stand

(Only LY34**, LY540*)

1

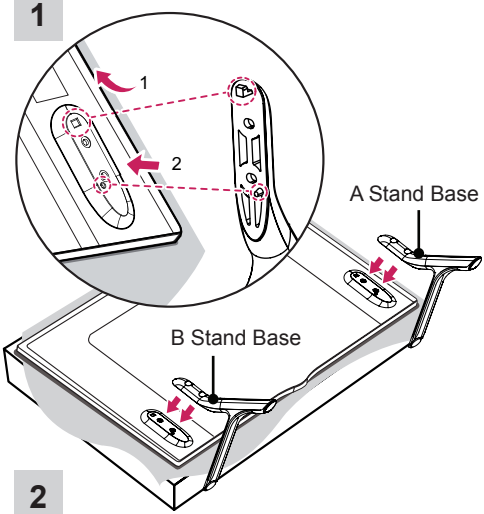

2

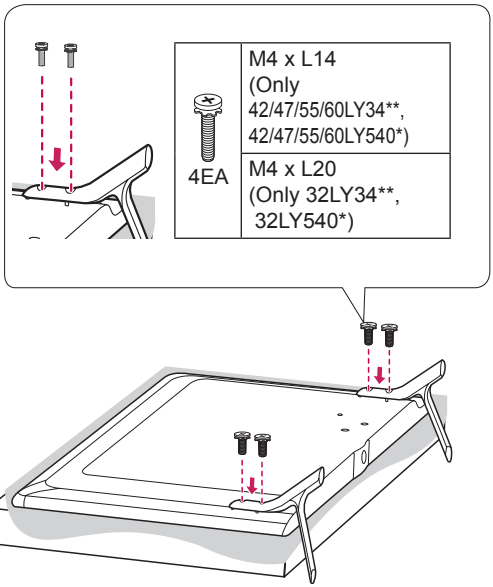

(Only 22/28LY33**, 24LW33**)

1

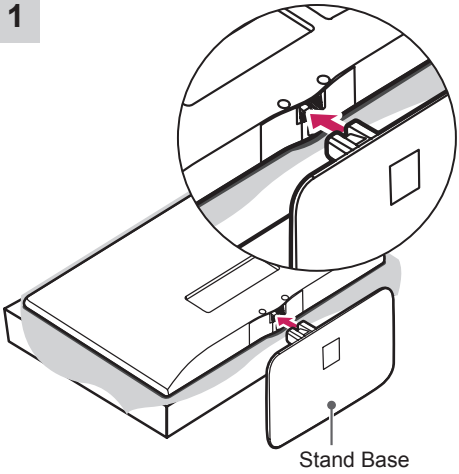

2

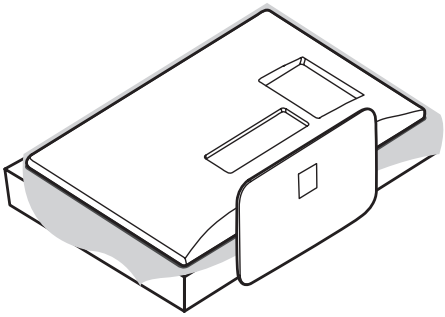

CAUTION

Image shown may differ from your TV.

When attaching the stand to the TV set, place the screen facing down on a cushioned table or flat surface to protect the screen from scratches.

(Only 32LY541*)

1

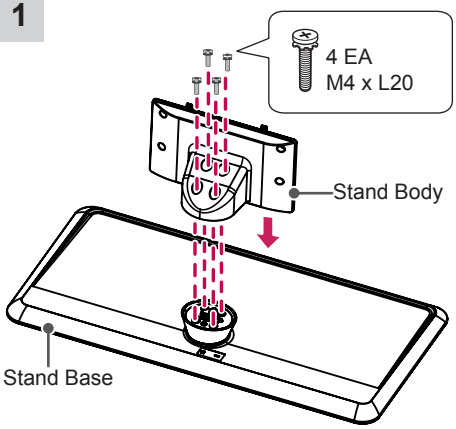

2

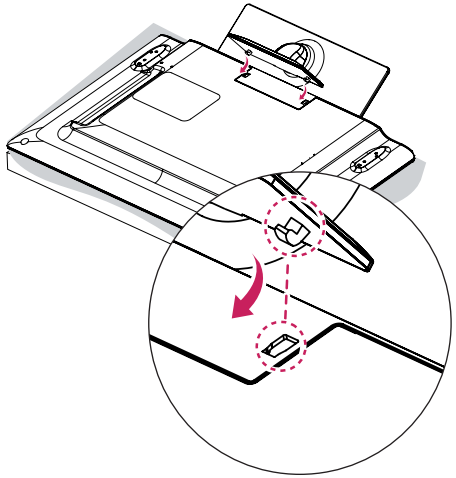

3

M4 x L20
2EA

or

Torx Plus Star-Head Screws
2EA

Tighten the two Torx head screws (supplied with TV) with a Torx Bit Driver (not supplied with TV).

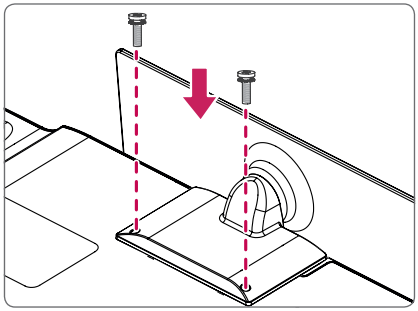

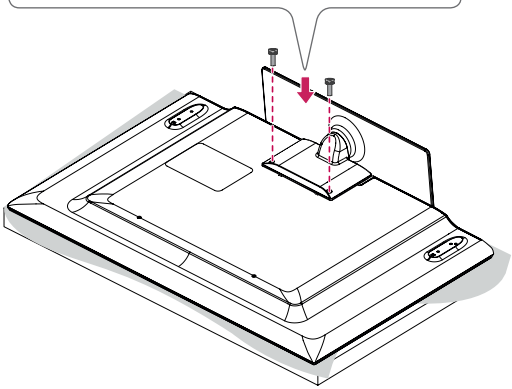

(Only 42/47/55LY541*)

1

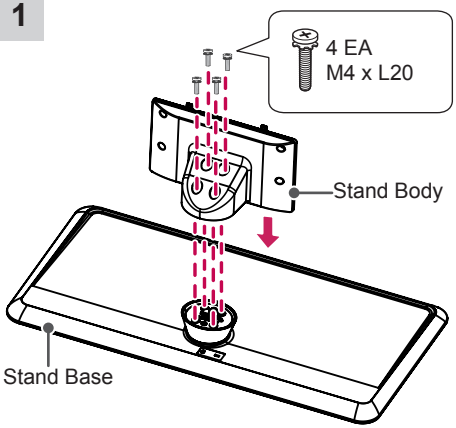

2

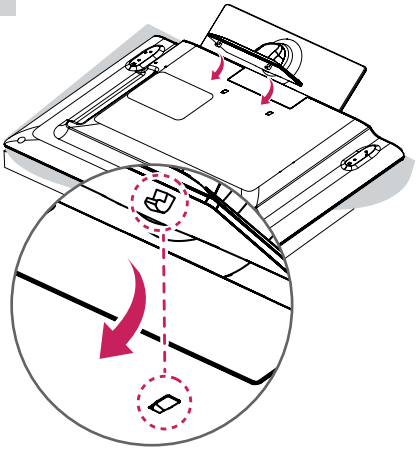

3

M4 x L14
4EA

or

M4 x L14
2EA

Torx Plus Star-Head Screws
2EA

Tighten the two of these four screws and the two Torx screws (supplied with TV) to secure the TV. Tighten the two Torx screws with a Torx Bit Driver (not supplied with TV).

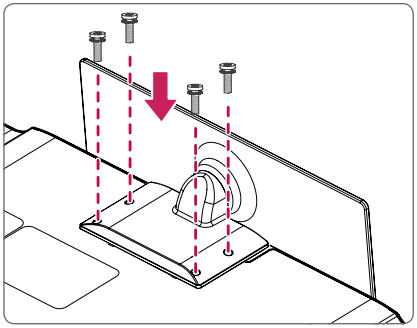

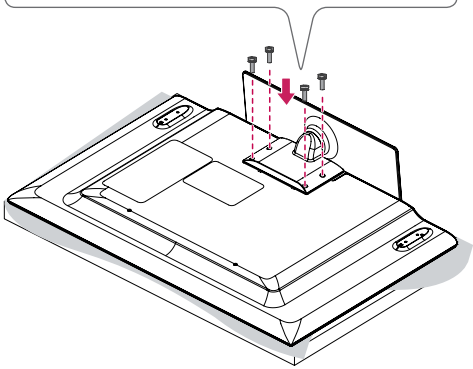

CAUTION

- When attaching the stand to the TV set, place the screen facing down on a cushioned table or flat surface to protect the screen from scratches.
- Make sure that the screws are fastened completely. (If they are not fastened securely enough, the TV may tilt forward after being installed.) Do not use too much force and over tighten the screws; otherwise screw may be damaged and not tighten correctly.

NOTE

- Remove the stand before installing the TV on a wall mount by performing the stand attachment in reverse.
- The Rubber will protect the opening from accumulating dust and dirt. When installing the wall mounting bracket, use the Rubber. (Only LY541*)

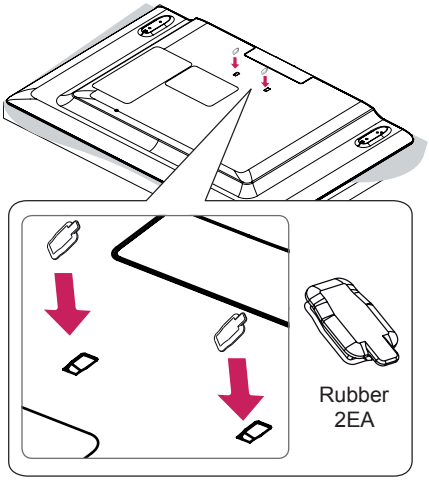

Mounting on a table

(Depending on Model)

1 Lift and tilt the TV into its upright position on a table.
   - Leave a 10 cm (minimum) space from the wall for proper ventilation.

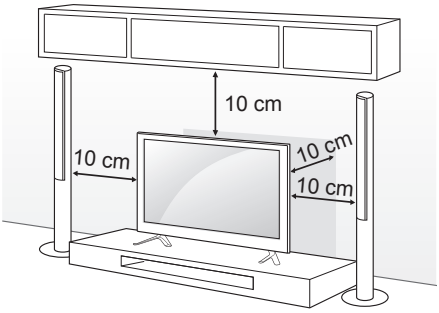

2 Connect the power cord to a wall outlet.

CAUTION

- Do not place the TV near or on sources of heat, as this may result in fire or other damage.

WARNING

- If a television is not positioned in a sufficiently stable location, it can be potentially hazardous due to falling. Many injuries, particularly to children, can be avoided by taking simple precautions such as:
  - » Using cabinets or stands recommended by the manufacturer of the television.
  - » Only using furniture that can safely support the television.
  - » Ensuring the television is not overhanging the edge of the supporting furniture.
  - » Not placing the television on tall furniture (for example, cupboards or bookcases) without anchoring both the furniture and the television to a suitable support.
  - » Not standing the televisions on cloth or other materials placed between the television and supporting furniture.
  - » Educating children about the dangers of climbing on furniture to reach the television or its controls.

Adjusting the angle of the TV to suit view

(Only LY541*)

Swivel 20 degrees to the left or right and adjust the angle of the TV to suit your view.

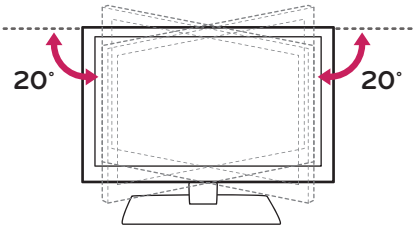

CAUTION

- When adjusting the angle of the product, watch out for your fingers.
  - » Personal injury may occur if hands or fingers are pinched. If the product is tilted too much, it may fall, causing damage or injury.

Attaching the TV to a desk

(Depending on model)

The TV should be attached to a desk so it cannot be pulled in a forward/backward direction, potentially causing injury or damaging the product.

A type)

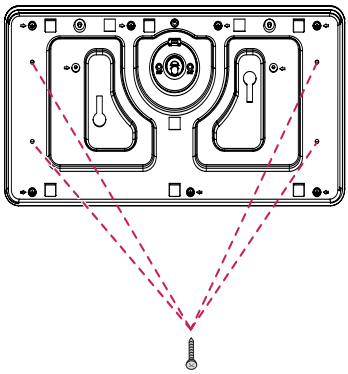

4-Screws

(Not supplied with TV)

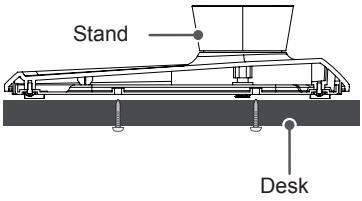

NOTE

- Screw : M5 x L (*L: Table depth + 8~10 mm)
  ex) Table depth: 15 mm, Screw: M5 x L25

B type)

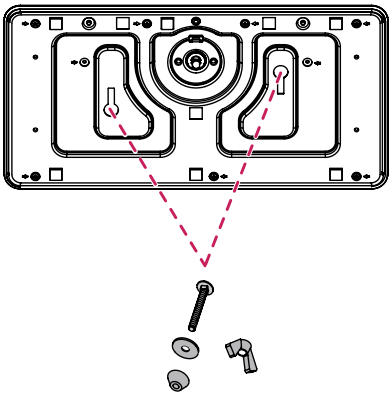

2-Screws for Stand Fixing,
2-Washers for Stand Fixing,
2-Nuts for Stand Fixing
(Supplied with TV)

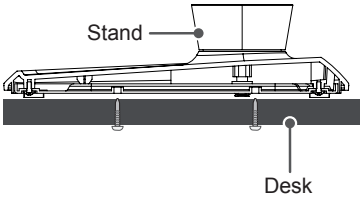

Securing the TV to a wall

(Features may vary depending on models)

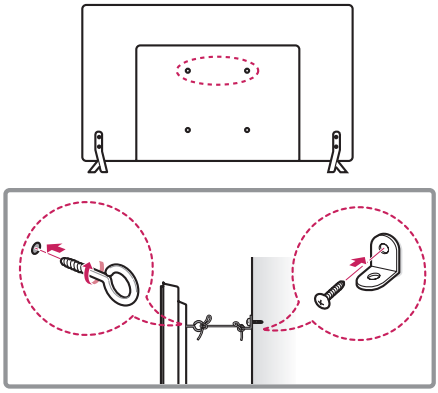

1 Insert and tighten the eye-bolts, or TV brackets and bolts on the back of the TV.
   - If there are bolts inserted at the eye-bolts position, remove the bolts first.
2 Mount the wall brackets with the bolts to the wall.
   Match the location of the wall bracket and the eye-bolts on the rear of the TV.
3 Connect the eye-bolts and wall brackets tightly with a sturdy rope.
   Make sure to keep the rope horizontal with the flat surface.

CAUTION

- Make sure that children do not climb on or hang on the TV.

NOTE

- Use a platform or cabinet that is strong and large enough to support the TV securely.
- Brackets, bolts and ropes are not provided. You can obtain additional accessories from your local dealer.

Mounting on a wall

(Depending on models)

Attach an optional wall mount bracket at the rear of the TV carefully and install the wall mount bracket on a solid wall perpendicular to the floor. When you attach the TV to other building materials, please contact qualified personnel. LG recommends that wall mounting be performed by a qualified professional installer. We recommend the use of LG's wall mount bracket.
When you do not use LG's wall mount bracket, please use a wall mount bracket where the device is adequately secured to the wall with enough space to allow connectivity to external devices.

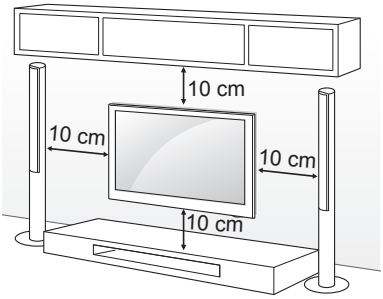

CAUTION

- Disconnect the power first, and the move or install the TV. otherwise electric shock may occur.
- Remove the stand before installing the TV on a wall mount by performing the stand attachment in reverse.
- The Screw Cover will protect the opening from accumulating dust and dirty.
- If you install the TV on a ceiling or slanted wall, it may fall and result in severe injury. Use an authorised LG wall mount and contact the local dealer or qualified personnel.
- Do not over tighten the screws as this may caused damage to the TV and void your manufacture's warranty.
- Use the screws and wall mounts that meet the VESA standard. Any damages or injuries by misuse or using and improper accessory are not covered by the manufacture's warranty.

Make sure to use screws and wall mount bracket that meet the VESA standard. Standard dimensions for the wall mount kits are described in the following table.

Separate purchase(Wall Mounting Bracket)

Model	22LY33** 24LW33**	28LY33**
VESA (A x B)(mm)	75 x 75	100 x 100
Standard screw	M4	M4
Number of screws	4	4
Model	32LY34** 32LY54**	42/47/55LY34** 42/47/55LY54**
VESA (A x B)(mm)	200 x 200	400 x 400
Standard screw	M6	M6
Number of screws	4	4
Model	60LY34** 60LY54**	
VESA (A x B)(mm)	400 x 400	
Standard screw	M6	
Number of screws	4	

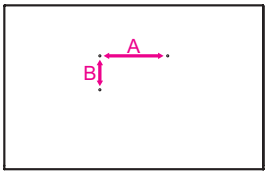

CAUTION

- Disconnect the power first, and then move or install the TV. Otherwise electric shock may occur.
- If you install the TV on a ceiling or slanted wall, it may fall and result in severe injury. Use an authorized LG wall mount and contact the local dealer or qualified personnel.
- Do not over tighten the screws as this may cause damage to the TV and void your warranty.
- Use the screws and wall mounts that meet the VESA standard. Any damages or injuries by misuse or using an improper accessory are not covered by the manufacturer's warranty.
- Screw length from outer surface of back cover should be under 8 mm.
  (Only 22/28LY33**, 24LW33**)

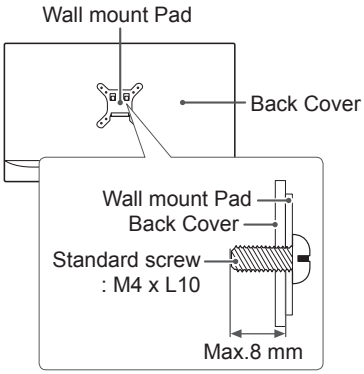

NOTE

- Use the screws that are listed on the VESA standard screw specifications.
- The wall mount kit includes an installation manual and necessary parts.
- The wall mount bracket is not provided. You can obtain additional accessories from your local dealer.
- The length of screws may differ depending on the wall mount. Make sure to use the proper length.
- For more information, refer to the manual supplied with the wall mount.
- When attaching a wall mounting bracket to the TV, insert the wall mount spacers into the TV wall mount holes to adjust the vertical angle of the TV.
  (Only 42LY34**, 42LY54**)

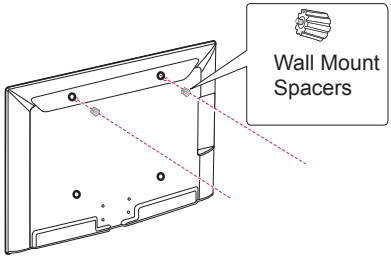

Tidying cables

Image shown may differ from your TV.

(Only 22/28LY33**, 24LW33**)

1 Gather and bind the cables with the cable holder.

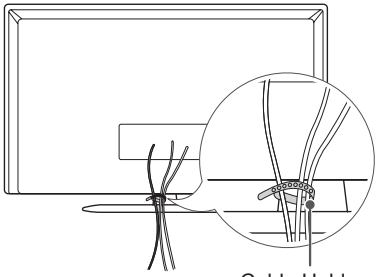

(Only LY540*, LY34**)

1 Gather and bind the cables with the cable holder.
2 Fix the Cable Management firmly to the TV.

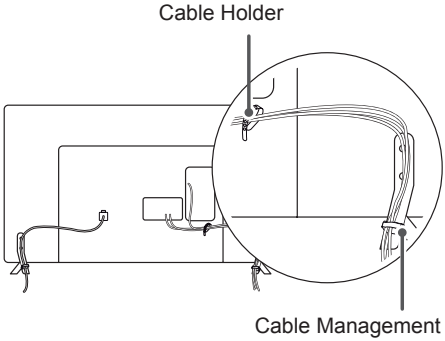

(Only 32LY541*)

1 Gather and bind the cables with the cable holder.

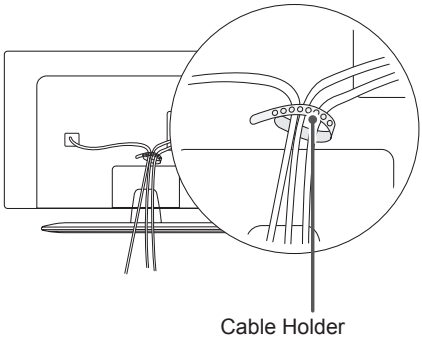

(Only 42/47/55LY541*)

1 Install the power cord holder and power cord. It will help prevent the power cable from being removed by accident.
2 Gather and bind the cables with the cable holder.

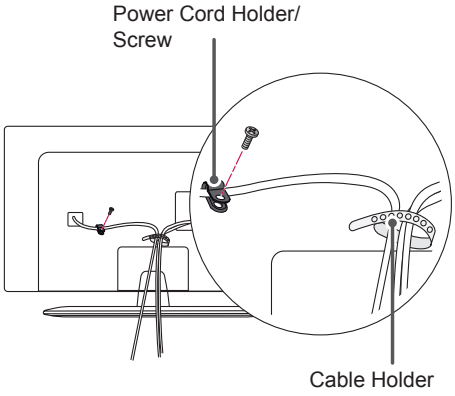

CAUTION

- Do not move the TV by holding the cable holder, as the cable holder may break, and injuries and damage to the TV may occur.

MAKING CONNECTIONS

- Image shown may differ from your TV.
- Any separate cable is not provided.

This section on **MAKING CONNECTIONS** mainly uses diagrams for the 47LY34** models. Connect various external devices to the TV and switch input modes to select an external device. For more information of external device's connection, refer to the manual provided with each device.
Available external devices are: HD receivers, DVD players, VCRs, audio systems, USB storage devices, PC, gaming devices, and other external devices.

NOTE

- The external device connection may differ from the model.
- Connect external devices to the TV regardless of the order of the TV port.
- If you record a TV program on a DVD recorder or VCR, make sure to connect the TV signal input cable to the TV through a DVD recorder or VCR. For more information on recording, refer to the manual provided with the connected device.
- Refer to the external equipment's manual for operating instructions.
- If you connect a gaming device to the TV, use the cable supplied with the gaming device.
- In PC mode, there may be noise associated with the resolution, vertical pattern, contrast or brightness. If noise is present, change the PC output to another resolution, change the refresh rate to another rate or adjust the brightness and contrast on the PICTURE menu until the picture is clear.
- In PC mode, some resolution settings may not work properly depending on the graphics card.
- Only a USB storage device is recognizable.

Antenna Connection

Connect the TV to a wall antenna socket with an RF cable (75 Ω).

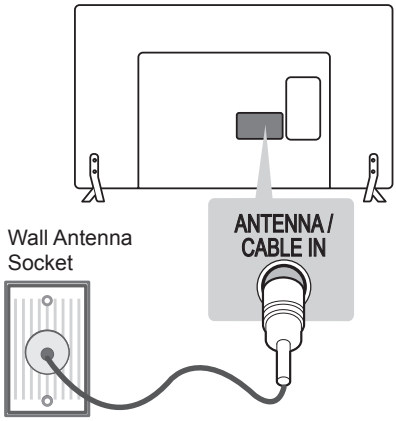

NOTE

- Use a signal splitter to use more than 2 TVs.
- If the image quality is poor, install a signal amplifier properly to improve the image quality.
- If the image quality is poor with an antenna connected, try to realign the antenna in the correct direction.
- An antenna cable and converter are not supplied.
- Supported DTV Audio: MPEG, Dolby Digital, Dolby Digital Plus, HE-AAC

Adapter Connection

(Only 22/28LY33**, 24LW33**)
(Depending on model & country)

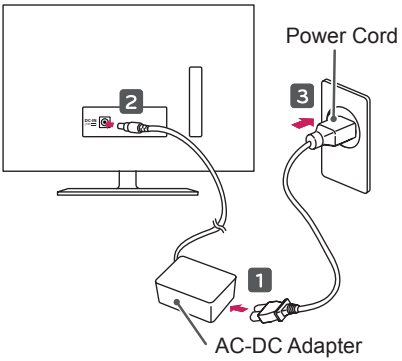

CAUTION

- Please be sure to connect the TV to the AC-DC power adapter before connecting the TV's power plug to a wall power outlet.

Network Setup

Wired network connection

This TV can be connected to a Pro:Centric server via the **LAN** port. After making the physical connection, the TV needs to be set up for network communication.
Connect the **LAN** port of the Modem or Router from Pro:Centric server to the **LAN** port on the TV.

(Only LY54**)

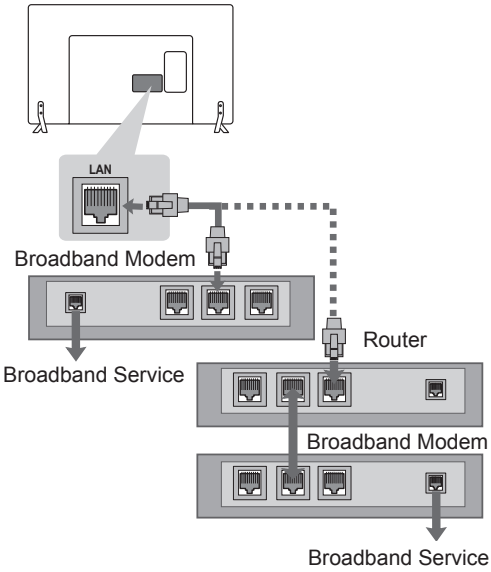

CAUTION

- Do not connect a modular phone cable to the **LAN** port.
- Since there are various connection methods, please follow the specifications of your telecommunication carrier or internet service provider.

Speaker Output Setup

(Depending on model)

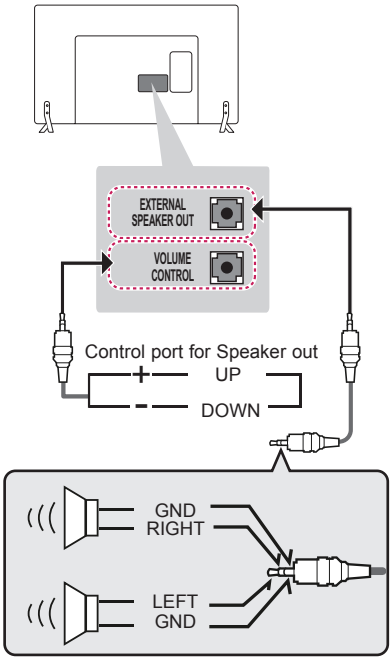

NOTE

- Use only with the 3 Pole 3.5mm Stereo Jack.
- Do not connect your headphones or earphones to the port for connecting an external speaker.

Method of Volume control port

- Cable Spec.

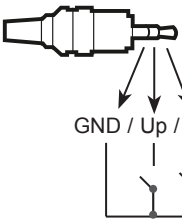	Each Up / Down pin is pulled to 3.3V with CPU GPIO.
	CPU detects transition from 3.3V to GND level for volume control.

Other Connections

Connect your TV to external devices. For the best picture and audio quality, connect the external device and the TV with the HDMI cable as shown. Some separate cable is not provided.

(Only LY540H, LY541H)

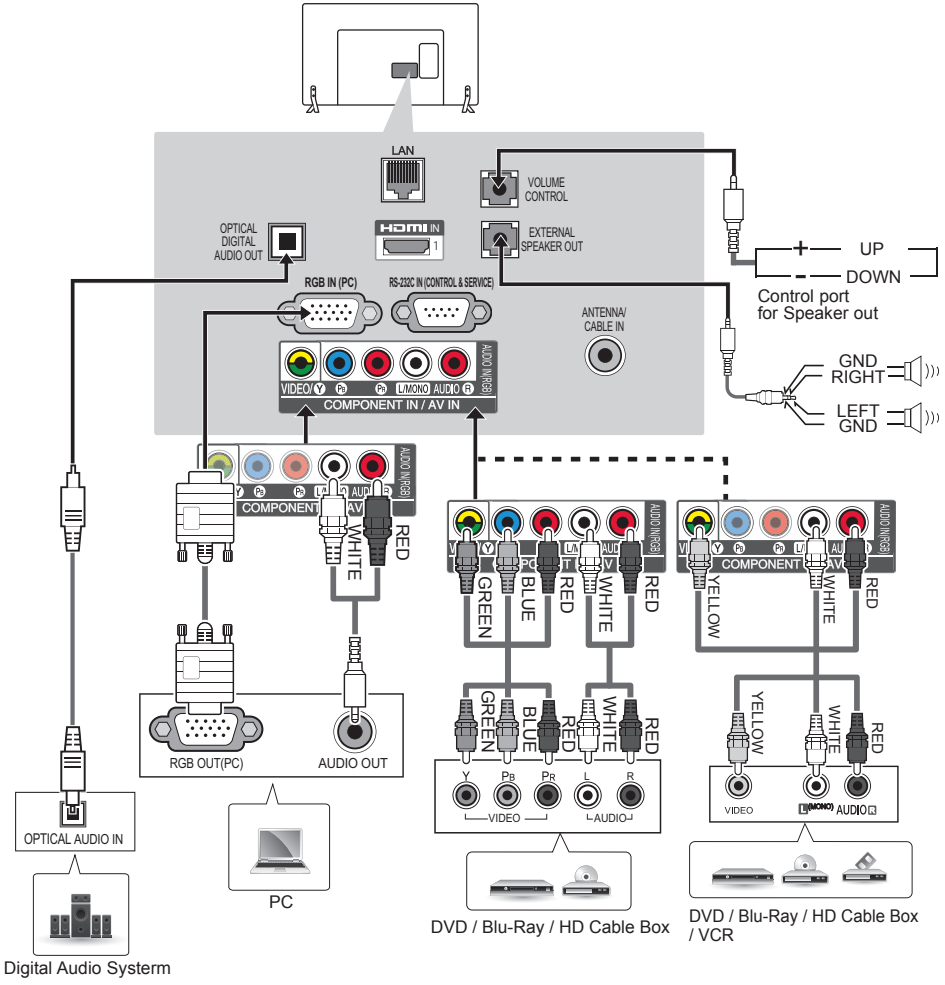

(Only LY540S)

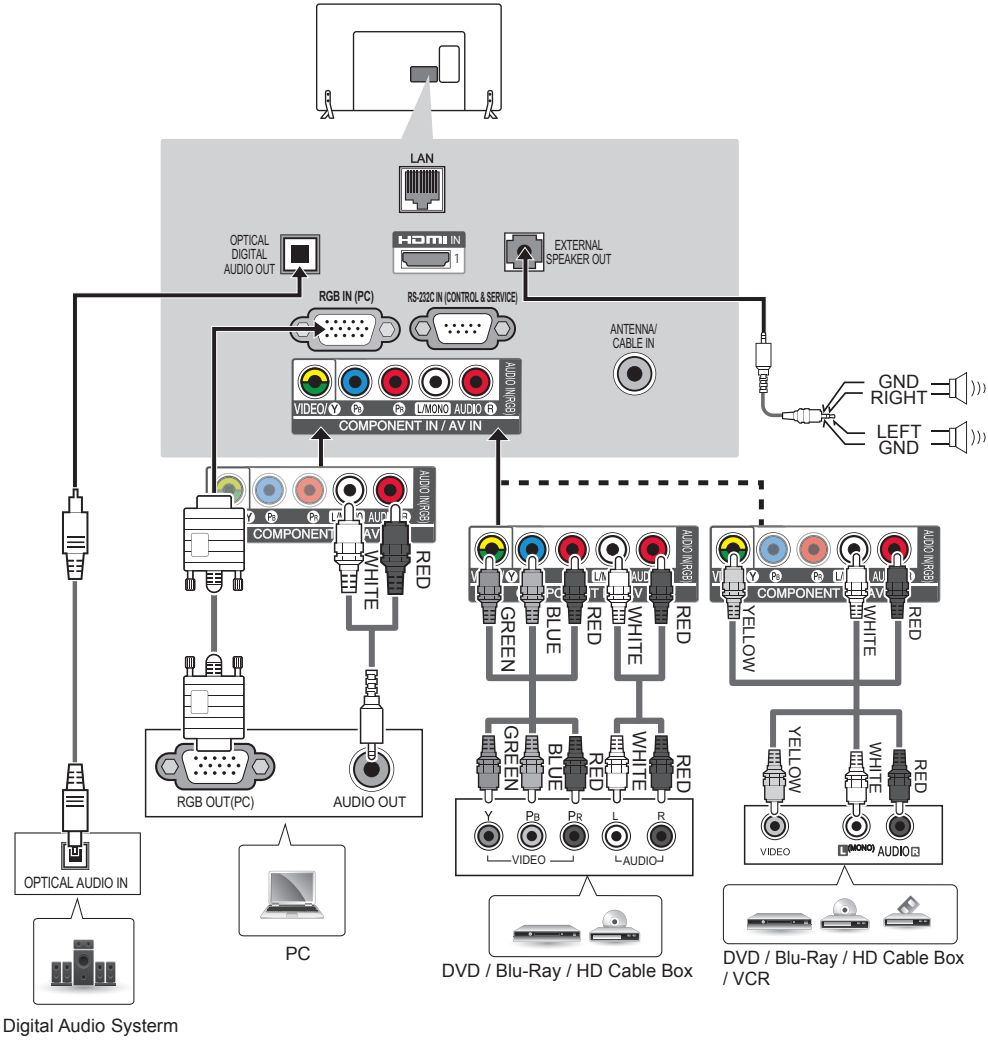
LAN
OPTICAL DIGITAL AUDIO OUT
HDMI IN 1
EXTERNAL SPEAKER OUT
RGB IN (PC)
RS-232C IN (CONTROL & SERVICE)
ANTENNA/ CABLE IN
VIDEO
L/MONO
AUDIO R
AUDIO IN(RGB)
COMPONENT IN / AV IN
GND
RIGHT
LEFT
GND
COMPONENT
WHITE
RED
GREEN
BLUE
YELLOW
RGB OUT(PC)
AUDIO OUT
OPTICAL AUDIO IN
PC
VIDEO
AUDIO
DVD / Blu-Ray / HD Cable Box
DVD / Blu-Ray / HD Cable Box / VCR
Digital Audio Systerm

(Only LY34**)

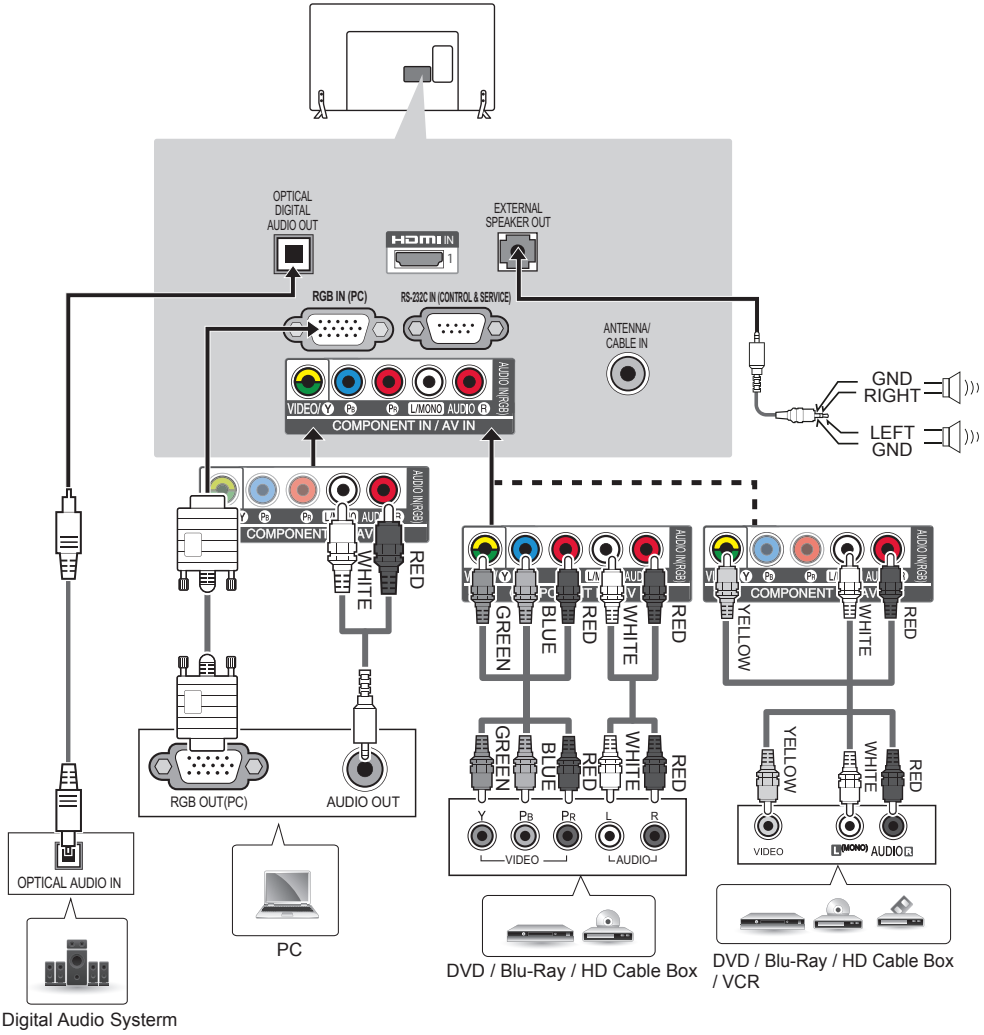
OPTICAL DIGITAL AUDIO OUT
EXTERNAL SPEAKER OUT
HDMI IN
RGB IN (PC)
RS-232C IN (CONTROL & SERVICE)
ANTENNA/ CABLE IN
AUDIO IN(RGB)
VIDEO
L/MONO
AUDIO
COMPONENT IN / AV IN
GND
RIGHT
LEFT
GND
COMPONENT
WHITE
RED
GREEN
BLUE
YELLOW
RGB OUT(PC)
AUDIO OUT
OPTICAL AUDIO IN
PC
VIDEO
AUDIO
Digital Audio Systerm
DVD / Blu-Ray / HD Cable Box
DVD / Blu-Ray / HD Cable Box / VCR

(Only LY34**, LY54**)

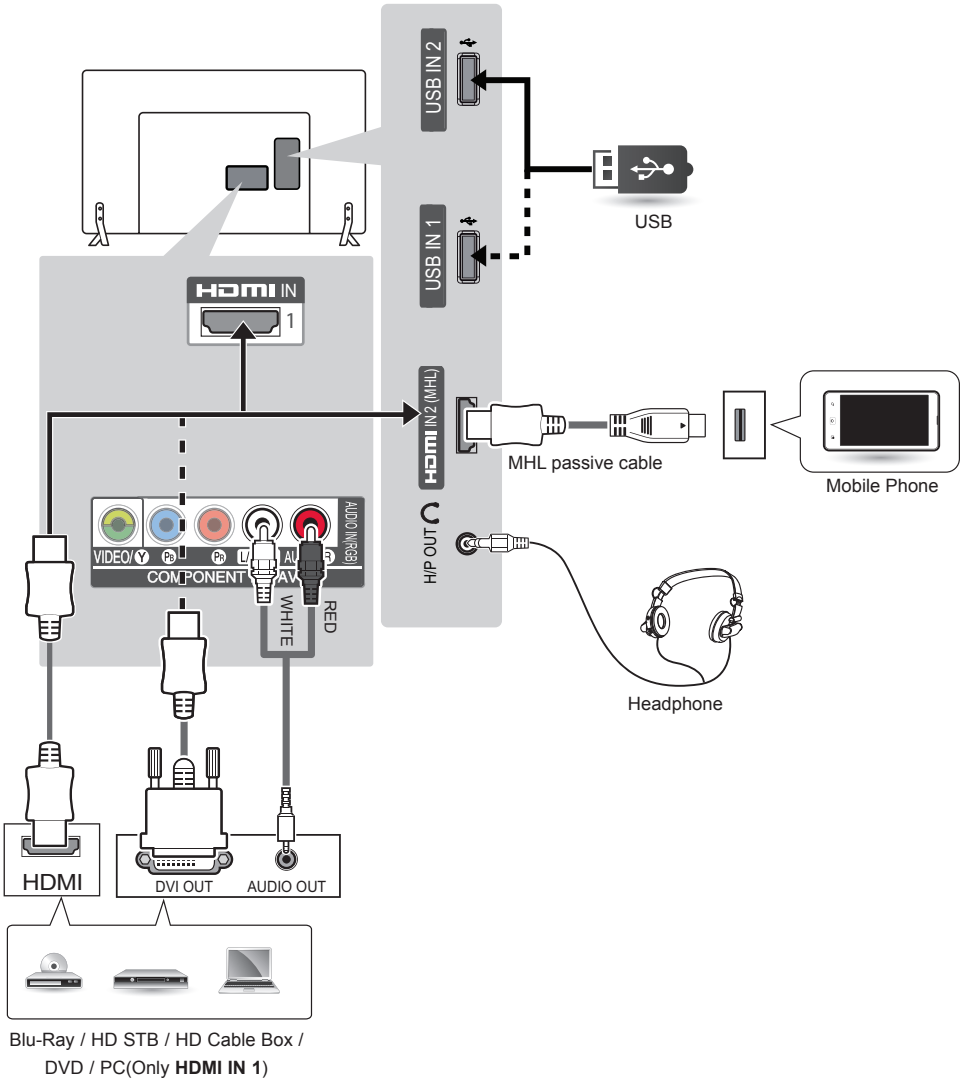

(Only LY33**)

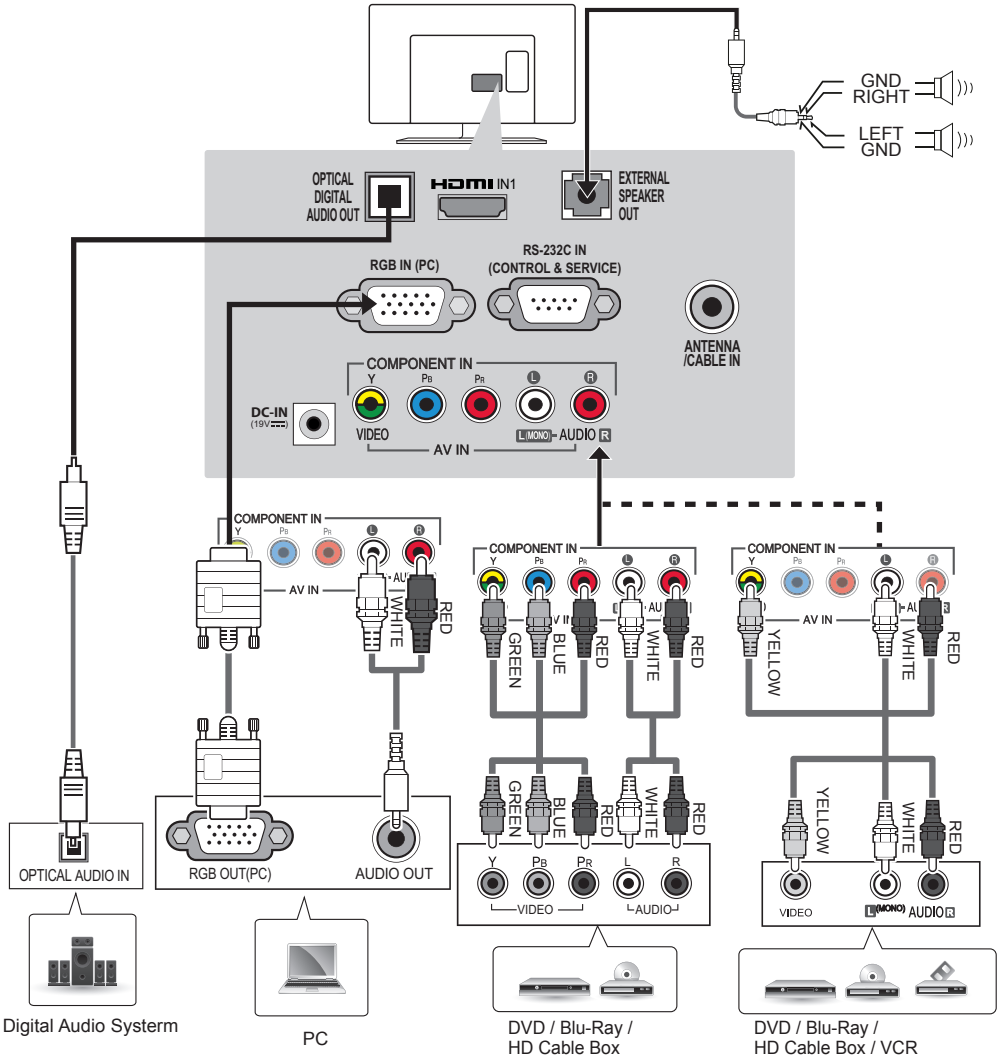
GND
RIGHT
LEFT
GND
OPTICAL DIGITAL AUDIO OUT
HDMI IN1
EXTERNAL SPEAKER OUT
RGB IN (PC)
RS-232C IN (CONTROL & SERVICE)
ANTENNA /CABLE IN
COMPONENT IN
Y
PB
PR
L
R
DC-IN
(19V)
VIDEO
L (MONO) AUDIO R
AV IN
WHITE
RED
GREEN
BLUE
YELLOW
OPTICAL AUDIO IN
RGB OUT(PC)
AUDIO OUT
Digital Audio Systerm
PC
DVD / Blu-Ray / HD Cable Box
DVD / Blu-Ray / HD Cable Box / VCR

(Only LY33**)

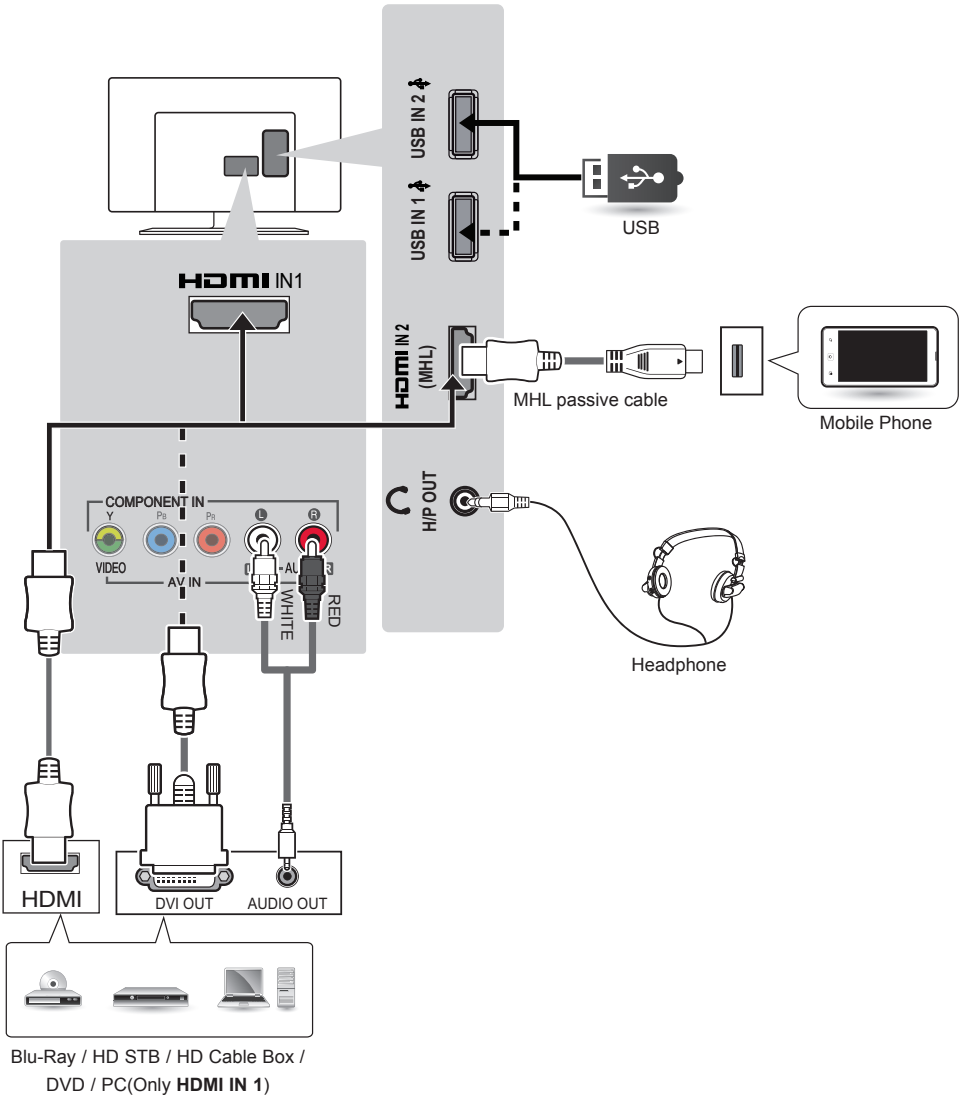
USB IN 2
USB IN 1
USB
HDMI IN1
HDMI IN 2 (MHL)
MHL passive cable
Mobile Phone
H/P OUT
Headphone
COMPONENT IN
VIDEO
AV IN
WHITE
RED
HDMI
DVI OUT
AUDIO OUT
Blu-Ray / HD STB / HD Cable Box /
DVD / PC(Only **HDMI IN 1**)

(Only LW33**)

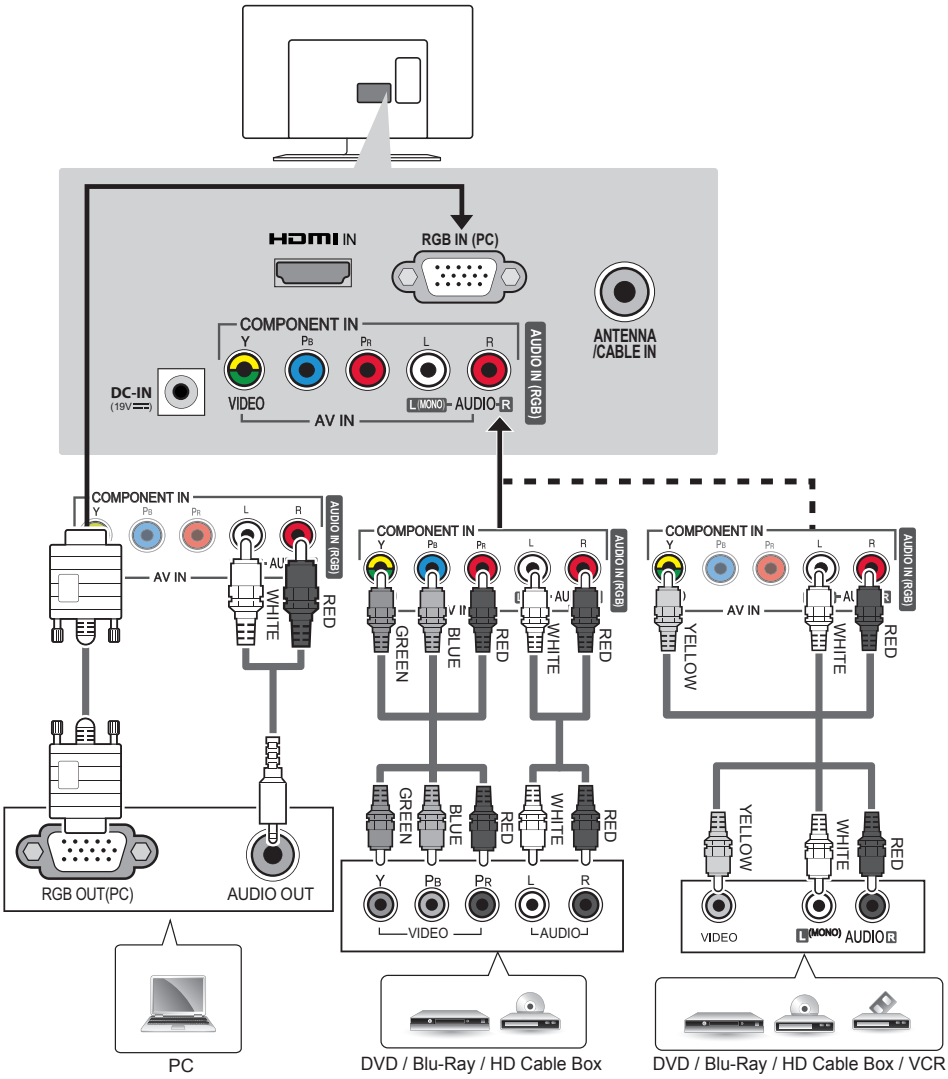
HDMI IN
RGB IN (PC)
ANTENNA /CABLE IN
COMPONENT IN
Y PB PR L R
AUDIO IN (RGB)
DC-IN
VIDEO
AV IN
L (MONO) AUDIO R
RGB OUT(PC)
AUDIO OUT
PC
GREEN
BLUE
RED
WHITE
YELLOW
DVD / Blu-Ray / HD Cable Box
DVD / Blu-Ray / HD Cable Box / VCR

(Only LW33**)

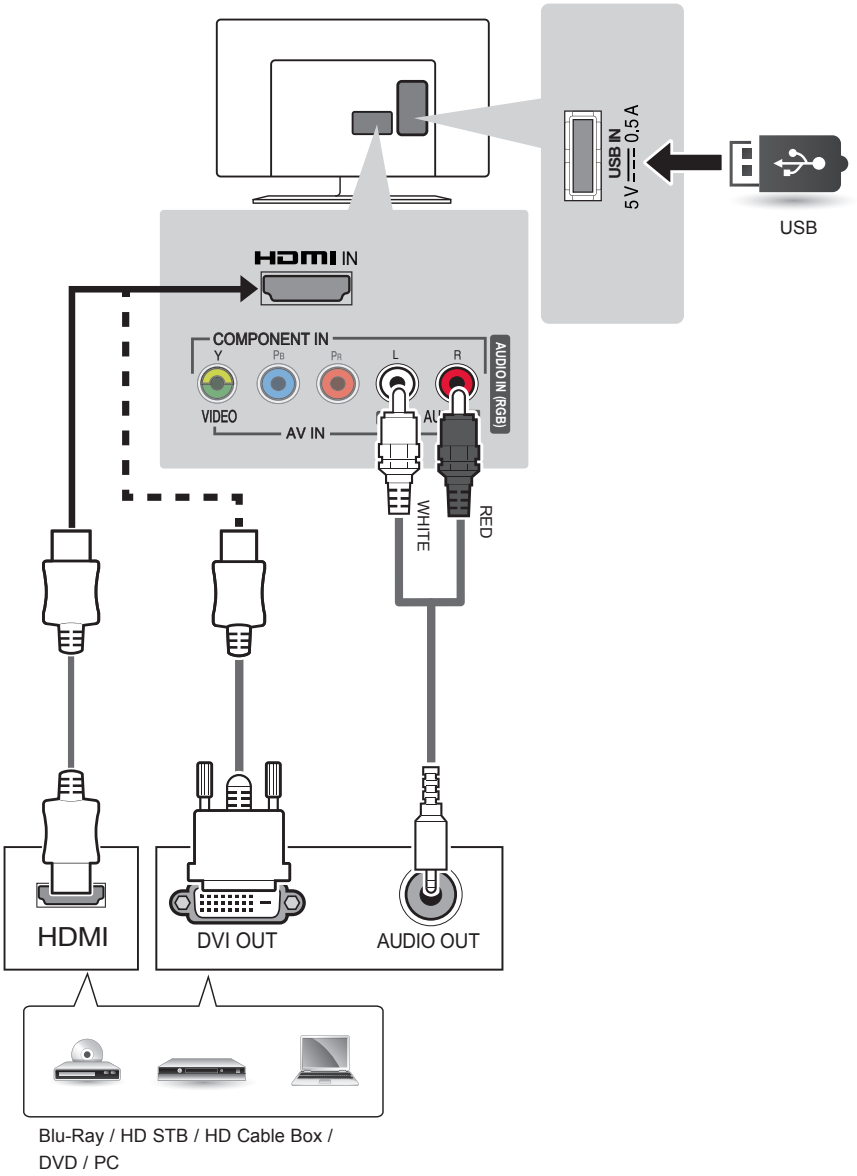
USB IN
5 V 0.5 A
USB
HDMI IN
COMPONENT IN
Y
PB
PR
L
R
AUDIO IN (RGB)
VIDEO
AV IN
WHITE
RED
HDMI
DVI OUT
AUDIO OUT
Blu-Ray / HD STB / HD Cable Box /
DVD / PC

REMOTE CONTROL

The descriptions in this manual are based on the buttons on the remote control.
Please read this manual carefully and use the TV correctly.
To replace batteries, open the battery cover, replace batteries (1.5 V AAA) matching the ⊕ and ⊖ ends to the label inside the compartment, and close the battery cover.
To remove the batteries, perform the installation actions in reverse.

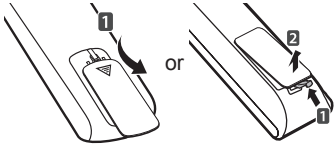

CAUTION

- Do not mix old and new batteries, as this may damage the remote control.
- In Analogue TV and some countries, some remote control buttons may not work.
- The remote control will not be included depending on sales market

Make sure to point the remote control toward the remote control sensor on the TV.

ENGLISH

(Depending on model)

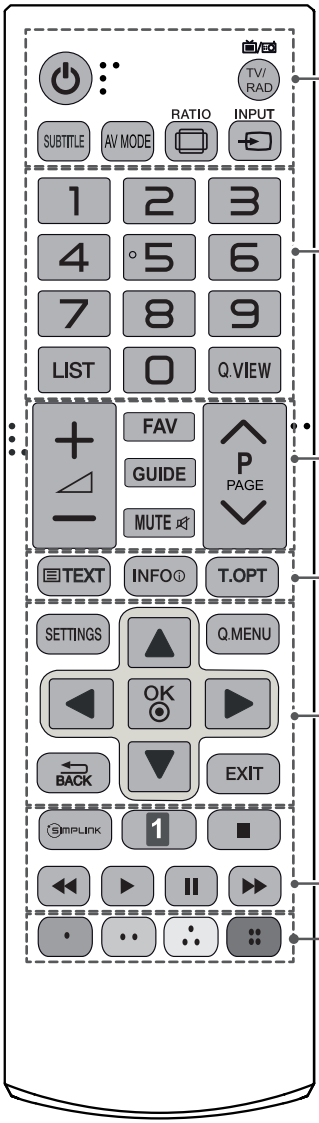

(POWER) Turns the TV on or off.

TV/RAD Selects Radio, TV and DTV programme.

SUBTITLE Recalls your preferred subtitle in digital mode.

AV MODE Selects an AV mode.

RATIO Resizes an image.

INPUT Changes the input source.

Number buttons Enters numbers.

LIST Accesses the saved programme list.

Q.VIEW Returns to the previously viewed programme.

+ - Adjusts the volume level.

FAV Accesses your favourite programme list.

GUIDE Shows programme guide.

MUTE Mutes all sounds.

P Scrolls through the saved programmes.

PAGE Moves to the previous or next screen.

Teletext buttons (TEXT/T.OPT) These buttons are used for teletext.

INFO Views the information of the current programme and screen.

SETTINGS Accesses the main menus.

Q.MENU Accesses the quick menus.

OK Selects menus or options and confirms your input.

Navigation buttons (up/down/left/right) Scrolls through menus or options.

BACK Returns to the previous level.

EXIT Clears all on-screen displays and return to TV viewing.

SIMPLINK Accesses the AV devices connected with the HDMI cable through HDMI-CEC. Opens the SIMPLINK menu.

SLEEP Sets the sleep timer. (Depending on model)

AD By pressing the AD button, audio descriptions function will be enabled. (Depending on model)

Control buttons (■, ▶, ❚❚, ◀◀, ▶▶) Controls the MY MEDIA menus, or the SIMPLINK compatible devices (USB,SIMPLINK).

Coloured buttons These access special functions in some menus.
(●: Red, ●●: Green, ●●●: Yellow, ●●●●: Blue)

(Depending on model)

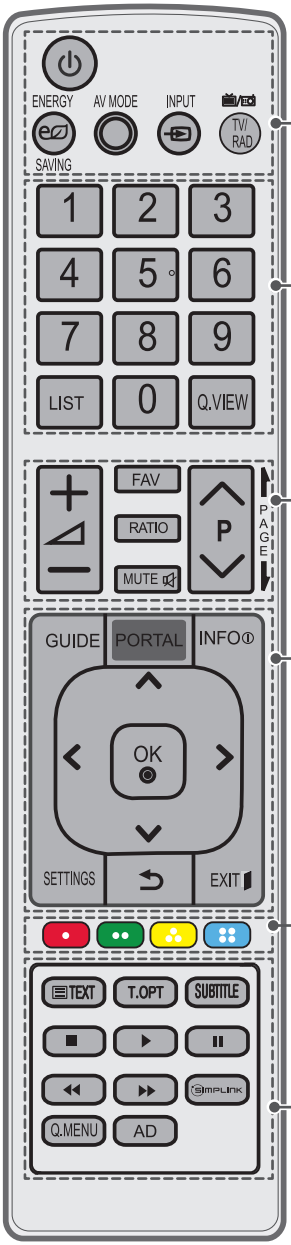

(POWER) Turns the TV on or off.
ENERGY SAVING Adjusts the brightness of the screen to reduce energy consumption.
AV MODE Selects an AV mode.
INPUT Changes the input source.
TV/RAD Selects Radio, TV and DTV programme.

Number buttons Enters numbers.
LIST Accesses the saved programme list.
Q.VIEW Returns to the previously viewed programme.

+ - Adjusts the volume level.
FAV Accesses your favourite programme list.
RATIO Resizes an image.
MUTE Mutes all sounds.
P Scrolls through the saved programmes.
PAGE Moves to the previous or next screen.

GUIDE Shows programme guide.
PORTAL Displays and removes hotel interactive menu.
INFO Views the information of the current programme and screen.
Navigation buttons (up/down/left/right) Scrolls through menus or options.
OK Selects menus or options and confirms your input.
SETTINGS Selects a menu. Clears all on-screen displays and returns to TV viewing from any menu.
(BACK) Returns to the previous level.
EXIT Clears on-screen displays and return to TV viewing.

Coloured buttons These access special functions in some menus. (: Red, : Green, : Yellow, : Blue)

Teletext buttons (TEXT/T.OPT) These buttons are used for teletext.
SUBTITLE Recalls your preferred subtitle in digital mode.
Control buttons (■, ▶, ❚❚, ◀◀, ▶▶)
Controls the MY MEDIA menus, or the SIMPLINK compatible devices (USB, SIMPLINK).
SIMPLINK Accesses the AV devices connected with the HDMI cable through HDMI-CEC. Opens the SIMPLINK menu.
Q.MENU Accesses the Quick menus.
AD By pressing the AD button, audio descriptions function will be enabled. (Depending on model)

MAINTENANCE

Cleaning your TV

Clean your TV regularly to keep the best performance and to extend the product lifespan.

CAUTION

- Make sure to turn the power off and disconnect the power cord and all other cables first.
- When the TV is left unattended and unused for a long time, disconnect the power cord from the wall outlet to prevent possible damage from lightning or power surges.

Screen, frame, cabinet and stand

- To remove dust or light dirt, wipe the surface with a dry, clean, and soft cloth.
- To remove major dirt, wipe the surface with a soft cloth dampened in clean water or a diluted mild detergent. Then wipe immediately with a dry cloth.

CAUTION

- Avoid touching the screen at all times, as this may result in damage to the screen.
- Do not push, rub, or hit the screen surface with your fingernail or a sharp object, as this may result in scratches and image distortions.
- Do not use any chemicals as this may damage the product.
- Do not spray liquid onto the surface. If water enters the TV, it may result in fire, electric shock, or malfunction.

Power cord

Remove the accumulated dust or dirt on the power cord regularly.

TROUBLESHOOTING

The software version can be updated for improvement in performance.Customer needs to ensure the compatibility of customer's equipment with LGE software. If needed, please consult with LGE and upload revised software version according to the guidance provided by LGE.

Problem	Solution
Cannot control the TV with the remote control.	• Check the remote control sensor on the product and try again. • Check if there is any obstacle between the product and the remote control. • Check if the batteries are still working and properly installed (⊕ to ⊕, ⊖ to ⊖).
No image display and no sound is produced.	• Check if the product is turned on. • Check if the power cord is connected to a wall outlet. • Check if there is a problem in the wall outlet by connecting other products.
The TV turns off suddenly.	• Check the power control settings. The power supply may be interrupted. • Check if the **Sleep Timer** or **Off Time** feature is activated in the **TIME** settings.
When connecting to the PC (RGB/HDMI/DVI), 'No signal' or 'Invalid Format' is displayed.	• Turn the TV off/on using the remote control. • Reconnect the RGB/HDMI cable. • Restart the PC with the TV on.

SPECIFICATIONS

Product specifications may be changed without prior notice due to upgrade of product functions.
For the power supply and power consumption, refer to the label attached to the product.

MODELS		22LY33**	
		22LY330C-TA (Only India)	22LY330C-TA (Except for India)
Dimensions (W x H x D)	With stand (mm)	507.6 x 355.9 x 140.6	507.6 x 355.9 x 135.8
	Without stand (mm)	507.6 x 315.7 x 53.1	507.6 x 315.7 x 53.1
Weight	With stand (kg)	3.1	3.1
	Without stand (kg)	2.9	2.9
Power requirement		19 V ⎓ 2.0 A	19 V ⎓ 2.0 A
MODELS		**28LY33****	
		28LY330C-TA (Only India)	28LY330C-TA (Except for India)
Dimensions (W x H x D)	With stand (mm)	641.5 x 432.0 x 175	641.5 x 432.0 x 170
	Without stand (mm)	641.5 x 395.8 x 57.6	641.5 x 395.8 x 57.6
Weight	With stand (kg)	4.5	4.5
	Without stand (kg)	4.2	4.2
Power requirement		19 V ⎓ 2.0 A	19 V ⎓ 2.0 A
MODELS		**32LY34****	**42LY34****
		32LY340C-TA	42LY340C-TA
Dimensions (W x H x D)	With stand (mm)	732 x 481 x 207	961 x 612 x 218
	Without stand (mm)	732 x 437 x 55.5	961 x 567 x 55.5
Weight	With stand (kg)	6.2	9.5
	Without stand (kg)	6.0	9.2
Power requirement		AC 100-240 V~ 50 / 60 Hz	AC 100-240 V~ 50 / 60 Hz
MODELS		**47LY34****	**55LY34****
		47LY340C-TA	55LY340C-TA
Dimensions (W x H x D)	With stand (mm)	1073 x 676 x 247	1243 x 772 x 247
	Without stand (mm)	1073 x 629 x 55.8	1243 x 725 x 56.8
Weight	With stand (kg)	12.7	17.7
	Without stand (kg)	12.3	17.3
Power requirement		AC 100-240 V~ 50 / 60 Hz	AC 100-240 V~ 50 / 60 Hz

MODELS		60LY34**	32LY540*
		60LY340C-TA	32LY540H-TA 32LY540S-TA
Dimensions (W x H x D)	With stand (mm)	1373 x 851 x 283	732 x 481 x 207
	Without stand (mm)	1373 x 801 x 58.8	732 x 437 x 55.5
Weight	With stand (kg)	23.5	6.2
	Without stand (kg)	23.0	6.0
Power requirement		AC 100-240 V~ 50 / 60 Hz	AC 100-240 V~ 50 / 60 Hz
MODELS		42LY540*	47LY540*
		42LY540H-TA 42LY540S-TA	47LY540H-TA 47LY540S-TA
Dimensions (W x H x D)	With stand (mm)	961 x 612 x 218	1073 x 676 x 247
	Without stand (mm)	961 x 567 x 55.5	1073 x 629 x 55.8
Weight	With stand (kg)	9.5	12.7
	Without stand (kg)	9.2	12.3
Power requirement		AC 100-240 V~ 50 / 60 Hz	AC 100-240 V~ 50 / 60 Hz
MODELS		55LY540*	60LY540*
		55LY540H-TA 55LY540S-TA	60LY540H-TA 60LY540S-TA
Dimensions (W x H x D)	With stand (mm)	1243 x 772 x 247	1373 x 851 x 283
	Without stand (mm)	1243 x 725 x 56.8	1373 x 801 x 58.8
Weight	With stand (kg)	17.7	23.5
	Without stand (kg)	17.3	23.0
Power requirement		AC 100-240 V~ 50 / 60 Hz	AC 100-240 V~ 50 / 60 Hz
MODELS		32LY541*	42LY541*
		32LY541H-TA	42LY541H-TA
Dimensions (W x H x D)	With stand (mm)	732 x 482 x 282	961 x 617 x 325
	Without stand (mm)	732 x 437 x 55.5	961 x 567 x 55.5
Weight	With stand (kg)	8.9	12.6
	Without stand (kg)	6.0	9.2
Power requirement		AC 100-240 V~ 50 / 60 Hz	AC 100-240 V~ 50 / 60 Hz

MODELS		47LY541*	55LY541*
		47LY541H-TA	55LY541H-TA
Dimensions (W x H x D)	With stand (mm)	1073 x 680 x 325	1243 x 771 x 325
	Without stand (mm)	1073 x 629 x 55.8	1243 x 725 x 56.8
Weight	With stand (kg)	15.7	20.7
	Without stand (kg)	12.3	17.3
Power requirement		AC 100-240 V~ 50 / 60 Hz	AC 100-240 V~ 50 / 60 Hz

MODELS		24LW331*
		24LW331C-TA
Dimensions (W x H x D)	With stand (mm)	556 x 384.3 x 140.6
	Without stand (mm)	556 x 343.1 x 53.1
Weight	With stand (kg)	3.5
	Without stand (kg)	3.3
Power requirement		19 V ⎓ 1.4 A

AC/DC Adapter	Only 22/28LY33**	Manufacturer : APD Model : DA-48F19, DA-40I19 Manufacturer : Lien chang Model : LCAP35
	Only 24LW33**	Manufacturer : Lien chang Model : LCAP39, LCAP40

Environment condition	Operating Temperature	0 °C to 40 °C
	Operating Humidity	Less than 80 %
	Storage Temperature	-20 °C to 60 °C
	Storage Humidity	Less than 85 %

	Digital TV (Depend on Country)	Analogue TV (Depend on Country)
Television System	DVB-T (DVB-T/T2[1]), DVB-C[2]	PAL B/B, PAL B/G, PAL D/K, PAL-I SECAM B/G, SECAM D/K NTSC-M
Programme Coverage	VHF, UHF	VHF, UHF, CATV
Maximum number of storable programmes	DVB-T/C & Analogue TV : 1,500	
External Antenna Impedance	75 Ω	

1 Only DVB-T2 support models.
2 Only DVB-C support models.

Component port connecting information

Component ports on the TV	Y	P_B	P_R

Video output ports on DVD player	Y	P_B	P_R
	Y	B-Y	R-Y
	Y	Cb	Cr
	Y	Pb	Pr

Signal	Component
480i / 576i	O
480p / 576p	O
720p / 1080i	O
1080p	O (50 Hz / 60 Hz only)

HDMI/DVI-DTV Supported Mode

Resolution	Horizontal Frequency (kHz)	Vertical Frequency (Hz)
720 x 480	31.469 31.5	59.94 60
720 x 576	31.25	50
1280 x 720	37.500 44.96 45	50 59.94 60
1920 x 1080i	33.72 33.75 28.125	59.94 60 50.00
1920 x 1080p	26.97 27 33.716 33.75 56.250 67.43 67.5	23.97 24 29.976 30.00 50 59.94 60

RGB-PC, HDMI-PC Supported Mode

(Use HDMI IN 1 for PC mode)

Resolution	Horizontal Frequency (kHz)	Vertical Frequency (Hz)
640 x 350	31.468	70.09
720 x 400	31.469	70.08
640 x 480	31.469	59.94
800 x 600	37.879	60.31
1024 x 768	48.363	60.00
1280 x 768	47.776	59.870
1152 x 864	54.348	60.053
1360 x 768	47.712	60.015
1280 x 1024 (HDMI-PC)	63.981	60.020
1920 x 1080 (HDMI-PC)	67.50	60.00

(Except for 32LY34**, 32LY54**, 22/28LY33**, 24LW33**)

NOTE

(Only 22/28LY33**, 24LW33**)

- The optimal display resolution : 1360 X 768 @60Hz
- The optimal timing in each mode is vertical frequency 60Hz.

Supported Video Formats

- Maximum: 1920 x 1080 @ 30p (only Motion JPEG 640 x 480 @ 30p)
- .asf, .wmv
  [Video] MPEG-2, MPEG-4 Part2, XViD, H.264/AVC, VC1(WMV3, WVC1), MP43
  [Audio] WMA Standard, WMA9(Pro), MP3, AAC, AC3.
- divx, .avi
  [Video] MPEG-2, MPEG-4 Part2, DivX3.11, DivX4, DivX5, DivX6, XViD, H.264/AVC
  [Audio] HE-AAC, LPCM, ADPCM, MPEG-1 Layer I, MPEG-1 Layer II, Dolby Digital, MPEG-1 Layer III (MP3), *DTS
- .ts, .trp, .tp, .mts, .m2ts
  [Video] H.264/AVC, MPEG-2, AVS, VC1
  [Audio] MPEG-1 Layer I, MPEG-1 Layer II, MPEG-1 Layer III (MP3), Dolby Digital, Dolby Digital Plus, AAC, HE-AAC, *DTS
- .vob
  [Video] MPEG-1, MPEG-2
  [Audio] Dolby Digital, MPEG-1 Layer I, MPEG- 1 Layer II, DVD-LPCM
- .mp4, .m4v, .mov
  [Video] MPEG-2, MPEG-4 Part2, DivX3.11, DivX4, DivX5, DivX6, XVID, H.264/AVC
  [Audio] AAC, MPEG-1 Layer III (MP3), *DTS
- .mkv
  [Video] MPEG-2, MPEG-4 Part2, XVID, H.264/AVC
  [Audio] HE-AAC, Dolby Digital, MPEG-1 Layer III (MP3), *DTS, LPCM
- motion JPEG
  [Video] MJPEG
  [Audio] LPCM, ADPCM
- .mpg, .mpeg, .mpe
  [Video] MPEG-1, MPEG-2
  [Audio] MPEG-1 Layer I, MPEG-1 Layer II, Dolby Digital, LPCM
- .dat
  [Video] MPEG-1, MPEG-2
  [Audio] MP2
- .flv
  [Video] Sorenson H.263, H.264/AVC
  [Audio] MP3, AAC, HE-AAC
- *rm, *rmvb
  [Video] RV30, RV40
  [Audio] Dolby Digital, AAC, HE-AAC, RA6(Cook)
- .3gp, 3gp2
  [Video] H.264/AVC, MPEG-4 Part2
  [Audio] AAC, AMR(NB/WB)
- *DTS / *rm / *rmvb : Depending on model

Supported Audio Formats

- File type : mp3
  [Bit rate] 32 Kbps - 320 Kbps
  [Sample freq.] 16 kHz - 48 kHz
  [Support] MPEG1, MPEG2, Layer2, Layer3
- File Type : AAC
  [Bit rate] Free Format
  [Sample freq.] 8 kHz ~ 48 kHz
  [Support] ADIF, ADTS
- File Type : M4A
  [Bit rate] Free Format
  [Sample freq.] 8 kHz ~ 48 kHz
  [Support] MPEG-4
- File Type : WMA
  [Bit rate] 128 Kbps ~ 320 Kbps
  [Sample freq.] 8 kHz ~ 48 kHz
  [Support] WMA7, WMA8, WMA9 Standard
- File Type : WMA 10 Pro
  [Bit rate] ~ 768 Kbps
  [Channel / Sample freq.]
  M0 : up to 2 Channel @ 48 kHz (Except LBR mode),
  M1 : up to 5.1 Channel @ 48 kHz,
  M2 : up to 5.1 Channel @ 96 kHz
  [Support] WMA 10 Pro
- File Type : OGG
  [Bit rate] Free Format
  [Sample freq.] ~ 48 kHz
  [Support] OGG Vorbis

Supported Photo Formats

- Category : 2D (jpeg, jpg, jpe)
  [Available file type] SOF0: Baseline, SOF1 : Extend Sequential, SOF2 : Progressive
  [Photo size] Minimum : 64 x 64, Maximum : Normal Type: 15360 (W) x 8640 (H), Progressive Type : 1920 (W) x 1440 (H)
- Category : BMP
  [Photo size] Minimum : 64 x 64, Maximum : 9600 x 6400
- Category : PNG
  [Available file type] Interlace, Non-Interlace
  [Photo size] Minimum : 64 x 64, Maximum : Interlace : 1200 x 800, Non-Interlace : 9600 x 6400
- BMP and PNG format files may be slower to display than JPEG.

IR CODES

- This feature is not available for all models.

Code (Hexa)	Function	Note	Code (Hexa)	Function	Note
08	(POWER)	Remote control Button (Power On/Off)	28	BACK	Remote control Button
F0	TV/RAD	Remote control Button	5B	EXIT	Remote control Button
39	SUBTITLE	Remote control Button	44	OK	Remote control Button
30	AV MODE	Remote control Button	40	^	Remote control Button
79	RATIO	Remote control Button	41	v	Remote control Button
0B	INPUT	Remote control Button	07	<	Remote control Button
10-19	Number Key 0-9	Remote control Button	06	>	Remote control Button
53	LIST	Remote control Button	72	RED	Remote control Button
1A	Q.VIEW	Remote control Button	71	GREEN	Remote control Button
02	+	Remote control Button	63	YELLOW	Remote control Button
03	-	Remote control Button	61	BLUE	Remote control Button
1E	FAV	Remote control Button	B1	■	Remote control Button
AB	GUIDE	Remote control Button	B0	►	Remote control Button
09	MUTE	Remote control Button	BA	❚❚	Remote control Button
00	P ^ / PAGE ^ / PAGE	Remote control Button	8E	►►	Remote control Button
01	P v / PAGE v / PAGE	Remote control Button	8F	◄◄	Remote control Button
20	TEXT	Remote control Button	7E	SIMPLINK	Remote control Button
21	T.OPT(T.Option)	Remote control Button	0C	PORTAL	Remote control Button
43	SETTINGS	Remote control Button	95	ENERGY SAVING	Remote control Button
45	Q.MENU	Remote control Button	0E	SLEEP	Remote control Button
AA	INFO	Remote control Button	91	AD	Remote control Button

EXTERNAL CONTROL DEVICE SETUP

RS-232C Setup

- Image shown may differ from your TV.

Connect the RS-232C (serial port) input jack to an external control device (such as a computer or an A/V control system) to control the product's functions externally.
Connect the serial port of the control device to the RS-232C jack on the product back panel.

NOTE

- RS-232C connection cables are not supplied with the product.

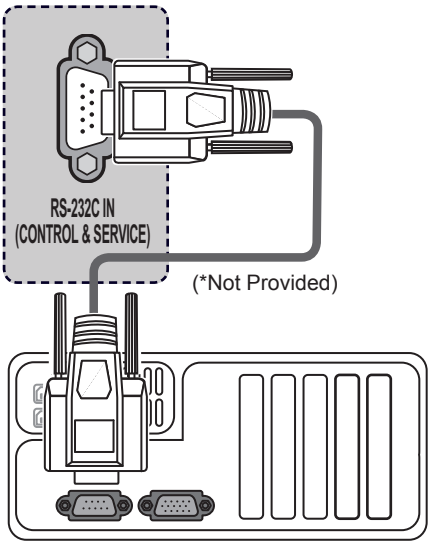

Type of Connector: D-Sub 9-Pin Male

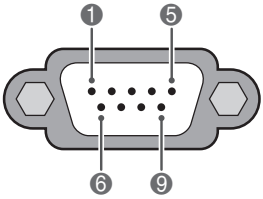

No.	Pin name
1	3.5 V
2	RXD (Receive data)
3	TXD (Transmit data)
4	IR OUT from TV
5	GND
6	No Connection
7	No Connection (5 V available in some models)
8	No Connection
9	No Connection (12 V available in some models)

RS-232C Configurations

7-Wire Configurations (Standard RS-232C cable)

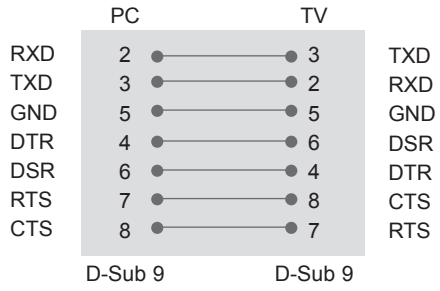

3-Wire Configurations (Not standard)

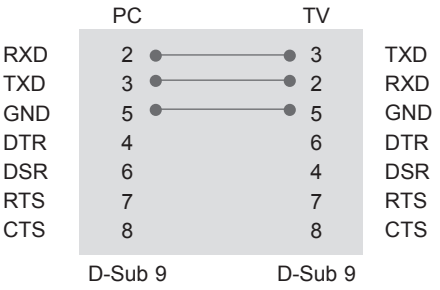

Set ID

Set ID number. “**Real Data Mapping**”.

1. Press **SETTINGS** or **HOME** to access the main menus.
2. Press the Navigation buttons to scroll to **OPTION** and press **OK**.
3. Press the Navigation buttons to scroll to **Set ID** and press **OK**.
4. Scroll left or right to select a set ID number and select **Close**. The adjustment range is 1-99.
5. When you are finished, press **EXIT**.

Communication Parameters

- Baud rate: 9600 bps (UART)
- Data length: 8 bits
- Parity : None
- Stop bit: 1 bit
- Communication code: ASCII code
- Use a crossed (reverse) cable.

Command Reference List

(Depending on Model)

	COM-MAND1	COM-MAND2	DATA (Hexadeci-mal)		COM-MAND1	COM-MAND2	DATA (Hexadeci-mal)
01. Power	k	a	00 to 01	12. Remote Control Lock Mode	k	m	00 to 01
02. Aspect Ratio	k	c	(See p.46)	13. Balance	k	t	00 to 64
03. Screen Mute	k	d	(See p.46)	14. Colour Tem-perature	x	u	00 to 64
04. Volume Mute	k	e	00 to 01	15. Energy Saving	j	q	00 to 05
05. Volume Control	k	f	00 to 64	16. Auto Con-figuration	j	u	01
06. Contrast	k	g	00 to 64	17. Equalize	j	v	(See p.48)
07. Brightness	k	h	00 to 64	18. Tune Com-mand	m	a	(See p.48)
08. Colour	k	i	00 to 64	19. Programme Add/Skip	m	b	00 to 01
09. Tint	k	j	00 to 64	20. Key	m	c	(See p.49)
10. Sharpness	k	k	00 to 32	21. Control Back Light	m	g	00 to 64
11. OSD Select	k	l	00 to 01	22. Input select (Main)	x	b	(See p.49)

NOTE

- During USB operations such as DivX or EMF, all commands except Power(ka) and Key(mc) are not executed and treated as NG.

Transmission / Receiving Protocol

Transmission

[Command1][Command2][ ][Set ID][ ][Data][Cr]

[Command 1]	:	First command to control the TV.(j, k, m or x)
[Command 2]	:	Second command to control the TV.
[Set ID]	:	You can adjust the set ID to choose desired monitor ID number in option menu. Adjustment range is 1 to 99. When selecting Set ID '0', every connected set is controlled. Set ID is indicated as decimal (1 to 99) on menu and as Hexa decimal (0x0 to 0x63) on transmission/receiving protocol.
[Data]	:	To transmit command data.Transmit 'FF' data to read status of command.
[Cr]	:	Carriage Return ASCII code '0x0D'
[ ]	:	ASCII code 'space (0x20)'

OK Acknowledgement

[Command2][ ][Set ID][ ][OK][Data][x]

* The set transmits ACK (acknowledgement) based on this format when receiving normal data. At this time, if the data is data read mode, it indicates present status data. If the data is data write mode, it returns the data of the PC computer.

Error Acknowledgement

[Command2][ ][Set ID][ ][NG][Data][x]

* The set transmits ACK (acknowledgement) based on this format when receiving abnormal data from non-viable functions or communication errors.

Data 00: Illegal Code

01. Power (Command: k a)

► To control Power On/Off of the set.

Transmission[k][a][ ][Set ID][ ][Data][Cr]

Data 00 : Power Off 01 : Power On

Ack [a][ ][Set ID][ ][OK/NG][Data][x]

► To Show TV is Power On/Off.

Transmission [k][a][ ][Set ID][ ][FF][Cr]

Ack [a][ ][Set ID][ ][OK/NG][Data][x]

* Similarly, if other functions transmit '0xFF' data based on this format, Acknowledgement data feed back presents status about each function.
* OK Ack., Error Ack. and other message may display on the screen when TV is power On.

02. Aspect Ratio (Command: k c)
(Main Picture Size)

► To adjust the screen format. (Main picture format) You can also adjust the screen format using the Aspect Ratio in the Q.MENU. or PICTURE menu.

Transmission [k][c][ ][Set ID][ ][Data][Cr]

Data 01 : Normal screen (4:3)
02 : Wide screen (16:9)
04 : Zoom
06 : Original
07 : 14:9
09 : Just Scan
0B : Full Wide
10 to 1F : Cinema Zoom 1 to 16

Ack [c][ ][Set ID][ ][OK/NG][Data][x]

* Using the PC input, you select either 16:9 or 4:3 screen aspect ratio.
* In DTV/HDMI (1080i 50 Hz / 60 Hz, 720p 50Hz / 60 Hz, 1080p 24 Hz / 30 Hz / 50 Hz / 60 Hz), Component(720p, 1080i, 1080p 50 Hz / 60 Hz) mode, Just Scan is available.
* Full Wide is supported only for Digital, Analogue (Eu only), AV (EU only) .

03. Screen Mute (Command: k d)

► To select screen mute on/off.

Transmission [k][d][ ][Set ID][ ][Data][Cr]

Data 00 : Screen mute off (Picture on) Video mute off
01 : Screen mute on (Picture off)
10 : Video mute on

Ack [d][ ][Set ID][ ][OK/NG][Data][x]

* In case of video mute on only, TV will display On Screen Display(OSD). But, in case of Screen mute on, TV will not display OSD.

04. Volume Mute (Command: k e)

► To control volume mute on/off.
You can also adjust mute using the MUTE button on remote control.

Transmission [k][e][ ][Set ID][ ][Data][Cr]

Data 00 : Volume mute on (Volume off)
01 : Volume mute off (Volume on)

Ack [e][ ][Set ID][ ][OK/NG][Data][x]

05. Volume Control (Command: k f)

► To adjust volume.
You can also adjust volume with the volume buttons on remote control.

Transmission [k][f][ ][Set ID][ ][Data][Cr]

Data Min : 00 to Max : 64

* Refer to Real data mapping.

Ack [f][ ][Set ID][ ][OK/NG][Data][x]

06. Contrast (Command: k g)

► To adjust screen contrast.
You can also adjust contrast in the PICTURE menu.

Transmission [k][g][ ][Set ID][ ][Data][Cr]

Data Min : 00 to Max : 64

* Refer to Real data mapping.

Ack [g][ ][Set ID][ ][OK/NG][Data][x]

07. Brightness (Command: k h)

► To adjust screen brightness.
You can also adjust brightness in the PICTURE menu.

Transmission [k][h][ ][Set ID][ ][Data][Cr]

Data Min : 00 to Max : 64

* Refer to Real data mapping.

Ack [h][ ][Set ID][ ][OK/NG][Data][x]

08. Colour (Command: k i)

► To adjust the screen Colour.
You can also adjust colour in the PICTURE menu.

Transmission [k][i][ ][Set ID][ ][Data][Cr]

Data Min : 00 to Max : 64

* Refer to Real data mapping.

Ack [i][ ][Set ID][ ][OK/NG][Data][x]

09. Tint (Command: k j)

► To adjust the screen tint.
You can also adjust tint in the PICTURE menu.

Transmission [k][j][ ][Set ID][ ][Data][Cr]

Data Red : 00 to Green : 64

* Refer to Real data mapping.

Ack [j][ ][Set ID][ ][OK/NG][Data][x]

10. Sharpness (Command: k k)

► To adjust the screen sharpness.
You can also adjust sharpness in the PICTURE menu.

Transmission [k][k][ ][Set ID][ ][Data][Cr]

Data Min : 00 to Max : 32

* Refer to Real data mapping.

Ack [k][ ][Set ID][ ][OK/NG][Data][x]

11. OSD Select (Command: k l)

► To select OSD (On Screen Display) on/off when controlling remotely.

Transmission [k][l][ ][Set ID][ ][Data][Cr]

Data 00 : OSD off 01 : OSD on

Ack [l][ ][Set ID][ ][OK/NG][Data][x]

12. Remote control lock mode (Command: k m)

► To lock the front panel controls on the monitor and remote control.

Transmission [k][m][ ][Set ID][ ][Data][Cr]

Data 00 : Lock off 01 : Lock on

Ack [m][ ][Set ID][ ][OK/NG][Data][x]

* If you are not using the remote control, use this mode. When main power is on/off, external control lock is released.

* In the standby mode, if key lock is on, TV will not turn on by power on key of IR & Local Key.

13. Balance (Command: k t)

► To adjust balance.
You can also adjust balance in the AUDIO menu.

Transmission [k][t][ ][Set ID][ ][Data][Cr]

Data L : 00 to R : 64

* Refer to Real data mapping.

Ack [t][ ][Set ID][ ][OK/NG][Data][x]

14. Colour Temperature (Command: x u)

► To adjust colour temperature. You can also adjust Colour Temperature in the PICTURE menu.

Transmission [x][u][ ][Set ID][ ][Data][Cr]

Data Warm: 00 to Cool:64

* Refer to Real data mapping.

Ack [u][ ][Set ID][ ][OK/NG][Data][x]

15. Energy Saving (Command: j q)

► To reduce the power consumption of the TV. You can also adjust Energy Saving in PICTURE menu.

Transmission [j][q][ ][Set ID][ ][Data][Cr]

Power Saving Function					Level				Description
7	6	5	4		3	2	1	0	
0	0	0	0	Low Power	0	0	0	0	Off
0	0	0	0	Low Power	0	0	0	1	Minimum
0	0	0	0	Low Power	0	0	1	0	Medium
0	0	0	0	Low Power	0	0	1	1	Maximum
0	0	0	0	Low Power	0	1	0	1	Screen Off
0	0	0	0	Low Power	0	1	0	0	Auto

► 'Auto' is available in TV that supports 'Intelligent Sensor'.

Ack [q][ ][Set ID][ ][OK/NG][Data][x]

16. Auto Configure (Command: j u) (Only RGB support model)

► To adjust picture position and minimize image shaking automatically. It works only in RGB (PC) mode.

Transmission [j][u][ ][Set ID][ ][Data][Cr]

Data 01 : To set

Ack [u][ ][Set ID][ ][OK/NG][Data][x]

17. Equalizer (Command : j v)

► To adjust equalize.

Transmission [j][v][ ][Set ID][ ][Data][Cr]

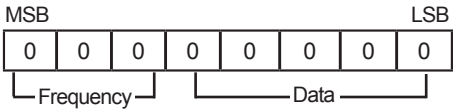

7	6	5	Frequency	4	3	2	1	0	Step
0	0	0	1st Band	0	0	0	0	0	0(decimal)
0	0	1	2nd Band	0	0	0	0	1	1(decimal)
0	1	0	3rd Band	...	...	...	...	...	...
0	1	1	4th Band	1	0	0	1	1	19(decimal)
1	0	0	5th Band	1	0	1	0	0	20(decimal)

Ack [v][ ][Set ID][ ][OK/NG][Data][x]

18. Tune Command (Command: m a)

► Select channel to following physical number.

Transmission [m][a][ ][Set ID][ ][Data 00][ ]
[Data 01][ ][Data 02][Cr]

Data 00 : High channel data

Data 01 : Low channel data
ex. No. 47 -> 00 2F (2FH)
No. 394 -> 01 8A (18AH),
DTV No. 0 -> Don't care

Data02 : [Antena]
0x00 : Analog Main
0x10 : DTV Main
0x20 : Radio

[Cable]
0x80 : Analog Main
0x90 : DTV Main
0xA0 : Radio

Channel data range
Analogue - Min: 00 to Max: 63 (0 to 99)
Digital - Min: 00 to Max: 3E7 (0 to 999)

Ack [a][ ][Set ID][ ][OK/NG][Data][x]

Data Min: 00 to Max: 7DH

19. Programme Add/Skip (Command: m b)

► To set skip status for the current Programme.

Transmission [m][b][ ][Set ID][ ][Data][Cr]

Data 00 : Skip 01 : Add

Ack [b][ ][Set ID][ ][OK/NG][Data][x]

20. Key (Command: m c)

► To send IR remote key code.

Transmission [m][c][ ][Set ID][ ][Data][Cr]

Data IR CODES

Ack [c][ ][Set ID][ ][OK/NG][Data][x]

21. Control Backlight (Command: m g)

► To control the backlight.

Transmission [m][g][ ][Set ID][ ][Data][Cr]

Data Min : 00 to Max : 64

Ack [g][ ][Set ID][ ][OK/NG][Data][x]

22. Input select (Command: x b)
(Main Picture Input)

► To select input source for main picture.

Transmission [x][b][ ][Set ID][ ][Data][Cr]

Data Structure

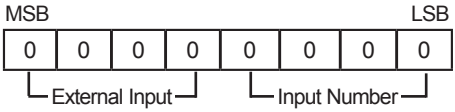

External Input				Data
0	0	0	0	DTV
0	0	0	1	Analogue
0	0	1	0	AV
0	1	0	0	Component
0	1	1	0	RGB
0	1	1	1	HDMI
1	0	0	0	
1	0	0	1	
1	0	1	0	

Input Number				Data
0	0	0	0	Input1
0	0	0	1	Input2
0	0	1	0	Input3
0	0	1	1	Input4

Ack [b][ ][Set ID][ ][OK/NG][Data][x]

* **Real data mapping**

00 : Step 0
⋮
A : Step 10 (Set ID 10)
⋮
F : Step 15 (Set ID 15)
10 : Step 16 (Set ID 16)
⋮
64 : Step 100
⋮
6E : Step 110
⋮
73 : Step 115
74 : Step 116
⋮
CF : Step 199
⋮
FE : Step 254
FF : Step 255



Record the model number and serial number of the TV.
Refer to the label on the back cover and quote this information to your dealer when requiring any service.

MODEL _____

SERIAL _____

(Only DTV)

